PLANS AND SPECIFICATIONS
FOR

VENTURA COUNTY MEDICAL CENTER (VCMC) PEDIATRIC UNIT

SPECIFICATION NO. CP21-04

PROJECT NO. P6T20009

PUBLIC WORKS
VENTURA COUNTY

county of ventura
ENGINEERING SERVICES

COUNTY OF VENTURA
PUBLIC WORKS AGENCY

NOTICE INVITING BIDS, PROPOSAL FORM, & SPECIFICATIONS

FOR

PROJECT NAME: **VCMC PEDIATRIC UNIT**

LOCATION: **300 Hillmont Avenue, Ventua CA 93003**

SPEC. NO.: **CP21-04** **COST ACCOUNTING PROJECT NO.:** **P6T20009**

DESIGNED BY: **Rasmussen & Associates** **CHECKED BY:** **Jay Lomagno**

REVIEWED BY: **Shawna Schlageter**

PROJECT MANAGER: **Shawna Schlageter**

RECOMMENDED BY:

Project Manager

APPROVED BY:

9/27/2022

Deputy Director of Public Works Agency

APPROVED BY:

9/29/22

Director of Public Works Agency

Construction bidding documents, including plans, specifications, addenda and any supplementary documents are only available on the Ventura County Public Works Agency Web Site.

COUNTY OF VENTURA
VCMC PEDIATRIC UNIT
SPECIFICATION NO.: CP21-04
PROJECT NO: P6T20009

TABLE OF CONTENTS

Notice of Inviting Bids	1	Page
Project Information and Bidding Documents	11	Pages
Prevailing Rates of Wages	1	Page
Excerpts from the California Labor Code	13	Pages
Excerpts from PCC 9204 January 1, 2017	4	Pages
Ventura County Standard Specifications - Table of Contents	8	Pages
Ventura County Standard Specifications	77	Pages
Special Provisions – Table of Contents	3	Pages
Special Provisions	504	Pages
Plans	89	Sheets

AGENCY NAME
NOTICE INVITING FORMAL BIDS

Bids will be received, electronically, until **2:00 p.m**. on **November 9, 2022**, for **Ventura County Medical Center Pediatric Unit**, Specification No. CP21-04, which consists of construction and remodeling of existing nursing unit to add patient rooms and support spaces for use as a pediatric nursing unit including the addition of a pedestrian walkway bridge from the pediatric unit to existing rooftop play yard.

Bids must be submitted on-line through Bonfire at:

https://ventura.bonfirehub.com/portal/?tab=openOpportunities#department=Public%20Works%20Agency

After the deadline for receiving bids, the bids will be opened and the results made public.

The estimated cost of construction is $ **8,410,000.00.**

All bidding documents, including plans, specifications, addenda, and any supplementary documents are available on the Bonfire website shown above.

A list of Plan Holders is available on the Bonfire website shown above.

An abstract of bids received will be available at https://www.vcpublicworks.org/es/bidsandsubs/

When projects are awarded, the award notification to the State will be posted at https://www.vcpublicworks.org/es/awardedcontracts/

Bids must be submitted electronically, using the forms provided, on the Bonfire Website.

Original hard copies of the Bid Guarantee must be submitted and received by the County prior to the Time of Bid Closure.

Subcontractor list must include a valid Contractor's License Number. Contractor and any subcontractors must be registered with the Department of Industrial Relations prior to bid time.

Each bid must be accompanied by a bid guarantee in the amount of not less than 10% of the amount bid, **PAYABLE TO THE County of Ventura** and guaranteeing that the bidder will enter into a contract in accordance with the terms of the bidding documents, if award is made. The bid guarantee shall be in one of the following forms: a bid bond written by an admitted surety insurer on the form included with the Proposal form, a cashier's check drawn by a national bank, a check certified by a national bank or cash. Bid bonds must be submitted in hard copy with the original signatures of the principal and surety. Copies of the completed bond will not be accepted.

Bidders must have a Class **B** California Contractors license. Upon award, the Contractor will be required to furnish a Performance Bond and a Payment Bond, each in the amount of 100% of the contract price.

In accordance with Section 22300 of the Public Contract Code, securities may be substituted for funds withheld.

Bidders, contractors, and other interested parties can obtain wage rates pertaining to Ventura County projects at the link provided below.

California general prevailing wage rates for construction can be obtained from the following Web site: http://www.dir.ca.gov/OPRL/DPreWageDetermination.htm.

The awarded contractor must post copies of the prevailing wage determinations at each job site.

PROJECT INFORMATION

FOR

VENTURA COUNTY MEDICA LCENTER PEDIATRIC UNIT

LOCATED IN
VENTURA COUNTY, CALIFORNIA

MAKE BID GUARANTEE TO **COUNTY OF VENTURA**
USE FORM PROVIDED (SEE PARAGRAPH 9, INSTRUCTION TO BIDDERS).

SPECIFICATION NO. **CP 21-04** INCLUDING **89** SHEETS OF PLANS

BIDS WILL BE RECEIVED ELECTRONICALLY UNTIL November 9, 2022 AT **2:00 P.M.**

AGENCY IS ALLOWED **60** DAYS TO AWARD A CONTRACT (SEE SECTION 2-1.1).

THE STARTING DATE OF CONTRACT WILL BE **28** CALENDAR DAYS AFTER AWARD OF CONTRACT (SEE SECTION 6-7.4).

COMPLETION TIME IS **200** WORKING DAYS (SEE SECTION 6-7).

LIQUIDATED DAMAGES ARE **$ 2,800.00** PER CALENDAR DAY (SEE SECTION 6-9).

CONTRACTOR'S LICENSE CLASSIFICATION REQUIRED IS **CLASS B.**

LIABILITY INSURANCE CLASS REQUIRED PER SECTION 7-4 IS **L-B.**

FEDERAL-AID CONTRACT PROVISIONS ARE **NOT** INCLUDED IN THESE SPECIFICATIONS.

NON-MANDATORY PREBID MEETING: 2:00 on 10/20/2022 at Ventura County Medical Center, 300 Hillmont Avenue, Ventura. CA 93003. (Section 01 00 01, Part 1, 1.02)

INSTRUCTION TO BIDDERS

1. LICENSING OF BIDDER. Before submitting bids, bidders shall be licensed in accordance with the provisions of Sections 7000 through 7145 of the Business and Professions Code of the State of California in the classification required for the work bid on. The bidder's license number, classification, and expiration date shall be inserted on Signature Sheet. The bidder's name shall correspond in all respects with the name shown on the license. License numbers and names are checked with the State.

2. **SITE INSPECTION**. Personally visit the worksite before submitting your bid to ascertain the existence of any surface or subsurface conditions affecting the cost of the work.

3. **INTERPRETATION AND QUESTIONS**. Carefully review the plans and specifications for any errors, omissions, or ambiguities. If you discover any or have specific questions, notify the Agency far enough in advance of the bid opening to allow time for the issuance of appropriate written addenda, if necessary. All questions concerning the plans, specifications, requirements, terms, schedule, addenda, and any other matters related to the solicitation shall be submitted through the Bonfire website using the “Opportunity Q&A” tab.

Written addenda shall be the sole means for modifying the plans and/or specifications prior to the bid opening. The Agency shall not be bound by oral communications purportedly modifying or interpreting the plans and/or specifications regardless of when or by whom such oral communications are made and you should not rely upon such oral communications in preparing your bid. Addenda will be posted on the Bonfire web site.

4. **BID ITEMS**. State in figures the unit prices, lump sum prices and extensions as indicated which shall be the prices for which you propose to supply all materials and services and perform all work required by the plans and specifications. All items described are to be construed as complete and in place. Include in the bid amount for items listed in the Bid Table the cost of performing all work shown on the plans or required by the specifications for which a specific bid item is not provided. Bid on all items listed under Schedule of Work and Prices unless otherwise indicated in the Bid Table.

5. **SIGNING OF BID**. Fill in all indicated blanks on the various forms provided. Bids will only be accepted if submitted electronically using the Bonfire website. Bids signed by an agent other than an owner, partner or corporate officer shal be accompanied by a power-of-attorney.

6. **NON-COLLUSION AFFIDAVIT**. The non-collusion affidavit required by Public Contract Code 7106 is included as a required document on the Bonfire website.

7. **BID FORM NOT TO BE ALTERED**. Do not change the wording of the Bid documents. Any additions, deletions, conditions, limitations or provisions by the bidder will render the Bid irregular and may cause its rejection.

8. **CORRECTING BID**. Corrections or adjustments to bids must be done using the Bonfire website and must be completed prior to the Bid Closure date and time.

9. **BID GUARANTEE**. A Bid Guarantee in the amount of not less than 10% of the amount bid and guaranteeing that the bidder will enter into a contract in accordance with the terms of the bidding documents if award is made to him must be submitted. The bid guarantee shall be in one of the following forms: A bid bond written by an admitted surety insurer on the form provided, a cashier's check drawn by a national bank, a check certified by a national bank or cash.

Original hard copies of the Bid Guarantee must be submitted and received by the County prior to the Time of Bid Closure. Bid Guarantee shall be mailed or delivered to:

Public Works Agency, County of Ventura
County Surveyor's Public Counter - 3rd Floor
Hall of Administration
800 South Victoria Ave.
Ventura, California 93009-1670.

For proper handling, mark the envelope as “BID GUARANTEE – SEALED BID” and show the specification number, project title, and the Bidder’s name and address.

The bid bond must have the original wet signatures of the principal and surety.

Note: Performance and Payment Bonds are required from the bidder to whom a contract is awarded. See specifications Subsection 2-4 for contract bond requirements including limitations on the sureties that may issue the bonds.

10. **SUBMITTING BID**. Submit your bid using the Bonfire website at:

www.ventura.bonfirehub.com

Only bids submitted via the Bonfire website will be considered. All documentation listed as required on that website must be completed and submitted.

11. **TIME OF BID CLOSURE**. The time and date of the Bid closure is indicated on the Bonfire website solicitation as “Close Date”. No bids will be accepted after that time.

12. **REVISION OR WITHDRAWAL OF BID**. Bids submitted using the Bonfire website can only be revised or withdrawn using the website. Once submitted, a bid that requires revisions or withdrawal must be accessed via the “Completed” tab under the “Your Submissions” section and action taken to revise or “unsubmit” (withdraw).

13. **ERRORS**. Bidder will not be released on account of errors. Bids submitted using the Bonfire website will be considered final. Bidders shall be careful to ensure all information that is submitted is complete and accurate.

14. **SUBCONTRACTOR LICENSE NUMBERS.** License numbers for subcontractors must be provided at the time the bid is received using the forms provided.

15. **PUBLIC WORKS CONTRACTOR REGISTRATION PROGRAM.** No contractor or subcontractor may be listed on a bid for a public works project unless registered with the Department of Industrial Relations pursuant to Labor Code section 1725.5 [with limited exceptions from this requirement for bid purposes only under Labor Code section 1771.1(a)]

No contractor or subcontractor may be awarded a contract for public work on a public works project unless registered with the Department of Industrial Relations pursuant to Labor Code section 1725.5

16. **LABOR COMPLIANCE MONITORING.** This project is subject to compliance monitoring and enforcement by the Department of Industrial Relations.

The Prime Contractor shall post job site notices prescribed by regulation.

(See Chapter 8, California Code Regulation section 16451(d) for notice that previously was required for projects monitored by the Compliance Monitoring Unit.)

NONCOLLUSION DECLARATION

NONCOLLUSION DECLARATION

The undersigned declares:

I am the _____ of _____, the party making the foregoing bid.

The bid is not made in the interest of, or on behalf of, any undisclosed person, partnership, company, association, organization, or corporation. The bid is genuine and not collusive or sham. The bidder has not directly or indirectly induced or solicited any other bidder to put in a false or sham bid. The bidder has not directly or indirectly colluded, conspired, connived, or agreed with any bidder or anyone else to put in a sham bid, or to refrain from bidding. The bidder has not in any manner, directly or indirectly, sought by agreement, communication, or conference with anyone to fix the bid price of the bidder or any other bidder, or to fix any overhead, profit, or cost element of the bid price, or of that of any other bidder. All statements contained in the bid are true. The bidder has not, directly or indirectly, submitted his or her bid price or any breakdown thereof, or the contents thereof, or divulged information or data relative thereto, to any corporation, partnership, company, association, organization, bid depository, or to any member or agent thereof, to effectuate a collusive or sham bid, and has not paid, and will not pay, any person or entity for such purpose.

Any person executing this declaration on behalf of a bidder that is a corporation, partnership, joint venture, limited liability company, limited liability partnership, or any other entity, hereby represents that he or she has full power to execute, and does execute, this declaration on behalf of the bidder.

I declare under penalty of perjury under the laws of the State of California that the foregoing is true and correct and that this declaration is executed on _____, at _____, _____.

Date

City State

Signature of Officer: _____

Printed Name of Officer:_____

LIST OF SUBCONTRACTORS

CONTRACTOR NAME:_____

Listing shall comply with the provisions of California Public Contract Code, Section 4104.

Name of Subcontractor	Contractor's License Number	Contractor's DIR Registration Number	Business Address	Items of Work

If more space is needed, add additional pages.

Public Contract Code Section 4104 provides that bidders must list:

(a)(1) The name, the location of the place of business, and the California contractor license number of each subcontractor who will perform work or labor or render service to the prime contractor in or about the construction of the work or improvement, or a subcontractor licensed by the State of California who, under subcontract to the prime contractor, specially fabricates and installs a portion of the work or improvement according to detailed drawings contained in the plans and specifications, in an amount in excess of one-half of 1 percent of the prime contractor's total bid or, in the case of bids or offers for the construction of streets or highways, including bridges, in excess of one-half of 1 percent of the prime contractor's total bid or ten thousand dollars ($10,000), whichever is greater.

(b) The portion of the work that will be done by each subcontractor under this act. The prime contractor shall list only one subcontractor for each portion as is defined by the prime contractor in his or her bid.

BID TABLE

Schedule of work and prices for: **VCMC PEDIATRIC UNIT**

Item No.	**Units**	Approx Quantity	Item Description	Payment Reference	Unit-Prices (In Figures)	Item Total (In Figures)
1	LS	1	All Work per Plans & Specifications	9-2		
			Total Amount Bid			

Bid Table is shown here for informational purposes.

Bid Table shall be filled out by Bidders using the Bonfire website. Bidders will access the Schedule of Work and Prices on the Bonfire website and input their Unit Prices.

SIGNATURE SHEET

Name: _____

Mailing Address: _____

City: _____ State: _____ Zip Code: _____

Telephone Number: (_____)_____-_____

Email Address: _____

I make this proposal and certify or declare under penalty of perjury under the laws of the State of California that:

- The statements and attestations made and associated with this Proposal, and below my signature, are true and correct.
- The bidder has read the Bid documents and has abided by and agrees to the conditions herein and has carefully examined the project plans and read the specifications and does hereby propose to furnish all materials and do all the work required to complete the work in accordance with the plans and specifications for the unit prices or lump sums named in the Bid Table.
- The bidder, as Principal, acknowledges himself as being bound by the attached bond or other acceptable bid guarantee.

Dated: _____ At: _____
(City and State)

Signature: _____

Printed Name: _____

Position: _____
(Sole Owner, Partner, President, etc.)

Company Name: _____ Type of Organization: _____
(Individual, Partnership, Corp.)

License No.:_____ License Classification: _____

License Expiration Date: _____

Spec. No.CP21-04

BID BOND

Enter }
Name & }
Address }
of Bonding }
Company }

KNOW ALL MEN BY THESE PRESENTS: That we _____

_____, Principal,

and_____

_____, Surety, are held and firmly bound unto

COUNTY OF VENTURA Obligee,

in the sum of Ten Percent of the total amount of the Bid for the payment of which we bind ourselves, our legal representatives, successors and assigns, jointly and severally, firmly by these presents.

WHEREAS, Principal has submitted or is about to submit a bid or proposal to Obligee on a contract for

VENTURA COUNTY MEDICAL CENTER PEDIATRIC UNIT

NOW, THEREFORE, if that contract be awarded to principal and principal shall, within such time as specified, duly execute the contract in the prescribed form and deliver the same to obligee with all required bonds/performance securities, certificates of insurance and such other items as required in the bidding or contract documents then this obligation shall be null and void; otherwise to remain in full force and effect, and if the contract is awarded to principal and principal fails, within the time specified, to duly execute the contract in the prescribed form and deliver the same to obligee with all said required items, then surety shall pay obligee the full sum of this bond.

Surety, for value received, hereby agrees that no extension of time, change, alteration, modification, or addition to the bidding or contract documents, or of the work required thereunder, shall release or exonerate surety on this bond or in any way affect the obligation of this bond; and surety does hereby waive notice of same.

Signed, sealed and dated

_____
(Principal)

by_____(Seal)

_____
(Surety)

by_____
Attorney-in-Fact

INDICATE COMPLETE ADDRESS OF SURETY TO WHICH CORRESPONDENCE CONCERNING THIS BOND SHOULD BE DIRECTED.

Telephone No._____

Form PW-B-1

CONTRACTOR'S OSHPD/HCAI EXPERIENCE

CONTRACTOR NAME:_____

Please see General Requirements Section 01 00 01

Note: There shall be no substitution for the project superintendent or project manager identified by the bidder herein without prior written approval of such substitution by the Engineer. Any subsequent project superintendent or project manager shall have the minimum qualifications set forth above.

1. Name of assigned project manager: _____

   How many projects with OSHPD/HCAI jurisdiction has the above worked on as a project manager? _____

   How many years has the above worked on OSHPD/HCAI jurisdiction projects? _____

   Please provide Project Name, Year Completed, Location and a Reference Contact Person for several projects that the above has worked on with OSHPD/HCAI jurisdiction within the last 10 years.

   OSHPD/HCAI Project Name: _____ Year Completed: _____ Location: _____

   Reference Name and Phone Number: _____

   OSHPD/HCAI Project Name: _____ Year Completed: _____ Location: _____

   Reference Name and Phone Number: _____

   OSHPD/HCAI Project Name: _____ Year Completed: _____ Location: _____

   Reference Name and Phone Number: _____

   OSHPD/HCAI Project Name: _____ Year Completed: _____ Location: _____

   Reference Name and Phone Number: _____

2. Name of assigned superintendent: _____

How many projects with OSHPD/HCAI jurisdiction has the above worked on as a superintendent? _____

How many years has the above worked on OSHPD/HCAI jurisdiction projects? _____

Please provide Project Name, Year Completed, Location and a Reference Contact Person for several projects that the above has worked on with OSHPD/HCAI jurisdiction within the last 10 years.

OSHPD/HCAI Project Name: _____ Year Completed: _____ Location: _____

Reference Name and Phone Number: _____

OSHPD/HCAI Project Name: _____ Year Completed: _____ Location: _____

Reference Name and Phone Number: _____

OSHPD/HCAI Project Name: _____ Year Completed: _____ Location: _____

Reference Name and Phone Number: _____

OSHPD/HCAI Project Name: _____ Year Completed: _____ Location: _____

Reference Name and Phone Number: _____

PREVAILING WAGE INFORMATION

COUNTY OF VENTURA
PUBLIC WORKS AGENCY

PREVAILING RATES OF WAGES

As provided in Subsection 7-2.2 of these specifications, and in accordance with Section 1770 *(Amended by Stats. 2017, Ch. 28, Sec. 17. (SB 96) Effective June 27, 2017),* et. seq. of the California Labor Code, determinations of the generally prevailing wages for various classes of workers in Ventura County have been made by the California Director of Industrial Relations as required by the California Labor Code.

As required by California Labor Code Section 1777.5, properly indentured apprentices shall be employed on the work in the minimum ratio of not less than one apprentice for each five journeymen in a craft or trade classification. Travel and subsistence shall be paid in accordance with California Labor Code Section 1773.8.
The body awarding the contract shall cause to be inserted in the contract stipulations to effectuate this section. The stipulations shall fix the responsibility of compliance with this section for all apprenticeable occupations with the prime contractor.

The determinations made by the State are available on the Internet at
http://www.dir.ca.gov/DLSR/PWD/Index.htm
and are on file in the office of the Public Works Agency
The rate fixed for each craft, classification, or type of work shall be not less than the prevailing rate paid in the craft, classification, or type of work.

The Contractor shall post a copy of the wage rates at each jobsite at a location readily available to the workers.

EXCERPTS FROM THE CALIFORNIA LABOR CODE

Excerpts from the
California Labor Code

These excerpts from the Labor Code include the sections listed in specification Section 7.2.2.2 that are required by Labor Code 1775(b)(1) to be included in all subcontracts. These excerpts also include sections recommended by the CA Department of Industrial Relations that contain information on the contractor registration requirements. These sections are furnished for the convenience of the contractor and in no way limit the required compliance with all laws.

1725.5. A contractor shall be registered pursuant to this section to be qualified to bid on, be listed in a bid proposal, subject to the requirements of Section 4104 of the Public Contract Code or engage in the performance of any public work contract that is subject to the requirements of this chapter. For the purposes of this section, "contractor" includes a subcontractor as defined by Section 1722.1.

(a) To qualify for registration under this section, a contractor shall do all of the following:
(1) (A) Register with the Department of Industrial Relations in the manner prescribed by the department and pay an initial nonrefundable application fee of four hundred dollars ($400) to qualify for registration under this section and an annual renewal fee on or before July 1 of each year thereafter. The annual renewal fee shall be in a uniform amount set by the Director of Industrial Relations, and the initial registration and renewal fees may be adjusted no more than annually by the director to support the costs specified in Section 1771.3.

(B) Beginning June 1, 2019, a contractor may register or renew according to this subdivision in annual increments up to three years from the date of registration. Contractors who wish to do so will be required to prepay the applicable nonrefundable application or renewal fees to qualify for the number of years for which they wish to preregister.

(2) Provide evidence, disclosures, or releases as are necessary to establish all of the following:

(A) Workers' compensation coverage that meets the requirements of Division 4 (commencing with Section 3200) and includes sufficient coverage for any worker whom the contractor employs to perform work that is subject to prevailing wage requirements other than a contractor who is separately registered under this section. Coverage may be evidenced by a current and valid certificate of workers' compensation insurance or certification of self-insurance required under Section 7125 of the Business and Professions Code.

(B) If applicable, the contractor is licensed in accordance with Chapter 9 (commencing with Section 7000) of the Business and Professions Code.

(C) The contractor does not have any delinquent liability to an employee or the state for any assessment of back wages or related damages, interest, fines, or penalties pursuant to any final judgment, order, or determination by a court or any federal, state, or local administrative agency, including a confirmed arbitration award. However, for purposes of this paragraph, the contractor shall not be disqualified for any judgment, order, or determination that is under appeal, provided that the contractor has secured the payment of any amount eventually found due through a bond or other appropriate means.

(D) The contractor is not currently debarred under Section 1777.1 or under any other federal or state law providing for the debarment of contractors from public works.

(E) The contractor has not bid on a public works contract, been listed in a bid proposal, or engaged in the performance of a contract for public works without being lawfully registered in accordance with this section, within the preceding 12 months or since the effective date of the requirements set forth in subdivision (e), whichever is earlier. If a contractor is found to be in violation of the requirements of this paragraph, the period of disqualification shall be waived if both of the following are true:

(i) The contractor has not previously been found to be in violation of the requirements of this paragraph within the preceding 12 months.

(ii) The contractor pays an additional nonrefundable penalty registration fee of two thousand dollars ($2,000).

(b) Fees received pursuant to this section shall be deposited in the State Public Works Enforcement Fund established by Section 1771.3 and shall be used only for the purposes specified in that section.

(c) A contractor who fails to pay the renewal fee required under paragraph (1) of subdivision (a) on or before the expiration of any prior period of registration shall be prohibited from bidding on or engaging in the performance of any contract for public work until once again registered pursuant to this section. If the failure to pay the renewal fee was inadvertent, the contractor may renew its registration retroactively by paying an additional nonrefundable penalty renewal fee equal to the amount of the renewal fee within 90 days of the due date of the renewal fee.

(d) If, after a body awarding a contract accepts the contractor's bid or awards the contract, the work covered by the bid or contract is determined to be a public work to which Section 1771 applies, either as the result of a determination by the director pursuant to Section 1773.5 or a court decision, the requirements of this section shall not apply, subject to the following requirements:

(1) The body that awarded the contract failed, in the bid specification or in the contract documents, to identify as a public work that portion of the work that the determination or decision subsequently classifies as a public work.

(2) Within 20 days following service of notice on the awarding body of a determination by the Director of Industrial Relations pursuant to Section 1773.5 or a decision by a court that the contract was for public work as defined in this chapter, the contractor and any subcontractors are registered under this section or are replaced by a contractor or subcontractors who are registered under this section.

(3) The requirements of this section shall apply prospectively only to any subsequent bid, bid proposal, contract, or work performed after the awarding body is served with notice of the determination or decision referred to in paragraph (2).

(e) The requirements of this section shall apply to any bid proposal submitted on or after March 1, 2015, to any contract for public work, as defined in this chapter, executed on or after April 1, 2015, and to any work performed under a contract for public work on or after January 1, 2018, regardless of when the contract for public work was executed.

(f) This section does not apply to work performed on a public works project of twenty-five thousand dollars ($25,000) or less when the project is for construction, alteration, demolition, installation, or repair work or to work performed on a public works project of fifteen thousand dollars ($15,000) or less when the project is for maintenance work.
(Amended by Stats. 2017, Ch. 28, Sec. 15. (SB 96) Effective June 27, 2017.)

1771. Except for public works projects of one thousand dollars ($1,000) or less, not less than the general prevailing rate of per diem wages for work of a similar character in the locality in which the public work is performed, and not less than the general prevailing rate of per diem wages for holiday and overtime work fixed as provided in this chapter, shall be paid to all workers employed on public works.
This section is applicable only to work performed under contract, and is not applicable to work carried out by a public agency with its own forces. This section is applicable to contracts let for maintenance work.

(Amended by Stats. 1981, Ch. 449, Sec. 1.)

1771.1. (a) A contractor or subcontractor shall not be qualified to bid on, be listed in a bid proposal, subject to the requirements of Section 4104 of the Public Contract Code, or engage in the performance of any contract for public work, as defined in this chapter, unless currently registered and qualified to perform public work pursuant to Section 1725.5. It is not a violation of this section for an unregistered contractor to submit a bid that is authorized by Section 7029.1 of the Business and Professions Code or by Section 10164 or 20103.5 of the Public Contract Code, provided the contractor is registered to perform public work pursuant to Section 1725.5 at the time the contract is awarded.

(b) Notice of the requirement described in subdivision (a) shall be included in all bid invitations and public works contracts, and a bid shall not be accepted nor any contract or subcontract entered into without proof of the contractor or subcontractor's current registration to perform public work pursuant to Section 1725.5.

(c) An inadvertent error in listing a subcontractor who is not registered pursuant to Section 1725.5 in a bid proposal shall not be grounds for filing a bid protest or grounds for considering the bid nonresponsive, provided that any of the following apply:

(1) The subcontractor is registered prior to the bid opening.

(2) Within 24 hours after the bid opening, the subcontractor is registered and has paid the penalty registration fee specified in subparagraph (E) of paragraph (2) of subdivision (a) of Section 1725.5.

(3) The subcontractor is replaced by another registered subcontractor pursuant to Section 4107 of the Public Contract Code.

(d) Failure by a subcontractor to be registered to perform public work as required by subdivision

(a) shall be grounds under Section 4107 of the Public Contract Code for the contractor, with the consent of the awarding authority, to substitute a subcontractor who is registered to perform public work pursuant to Section 1725.5 in place of the unregistered subcontractor.

(e) The department shall maintain on its Internet Web site a list of contractors who are currently registered to perform public work pursuant to Section 1725.5.

(f) A contract entered into with any contractor or subcontractor in violation of subdivision (a) shall be subject to cancellation, provided that a contract for public work shall not be unlawful, void, or voidable solely due to the failure of the awarding body, contractor, or any subcontractor to comply with the requirements of Section 1725.5 or this section.

(g) If the Labor Commissioner or his or her designee determines that a contractor or subcontractor engaged in the performance of any public work contract without having been registered in accordance with this section, the contractor or subcontractor shall forfeit, as a civil penalty to the state, one hundred dollars ($100) for each day of work performed in violation of the registration requirement, not to exceed an aggregate penalty of eight thousand dollars ($8,000) in addition to any penalty registration fee assessed pursuant to clause (ii) of subparagraph (E) of paragraph (2) of subdivision (a) of Section 1725.5.

(h) (1) In addition to, or in lieu of, any other penalty or sanction authorized pursuant to this chapter, a higher tiered public works contractor or subcontractor who is found to have entered into a subcontract with an unregistered lower tier subcontractor to perform any public work in violation of the requirements of Section 1725.5 or this section shall be subject to forfeiture, as a civil penalty to the state, of one hundred dollars ($100) for each day the unregistered lower tier subcontractor performs work in violation of the registration requirement, not to exceed an aggregate penalty of ten thousand dollars ($10,000).

(2) The Labor Commissioner shall use the same standards specified in subparagraph (A) of paragraph (2) of subdivision (a) of Section 1775 when determining the severity of the violation and what penalty to assess, and may waive the penalty for a first time violation that was unintentional and did not hinder the Labor Commissioner's ability to monitor and enforce compliance with the requirements of this chapter.

(3) A higher tiered public works contractor or subcontractor shall not be liable for penalties assessed pursuant to paragraph (1) if the lower tier subcontractor's performance is in violation of the requirements of Section 1725.5 due to the revocation of a previously approved registration.

(4) A subcontractor shall not be liable for any penalties assessed against a higher tiered public works contractor or subcontractor pursuant to paragraph (1). A higher tiered public works contractor or subcontractor may not require a lower tiered subcontractor to indemnify or otherwise be liable for any penalties pursuant to paragraph (1).

(i) The Labor Commissioner or his or her designee shall issue a civil wage and penalty assessment, in accordance with the provisions of Section 1741, upon determination of penalties pursuant to subdivision (g) and subparagraph (B) of paragraph (1) of subdivision (h). Review of a civil wage and penalty assessment issued under this subdivision may be requested in accordance with the provisions of Section 1742. The regulations of the Director of Industrial Relations, which govern proceedings for review of civil wage and penalty assessments and the withholding of contract payments under Article 1 (commencing with Section 1720) and Article 2 (commencing with Section 1770), shall apply.

(j) (1) Where a contractor or subcontractor engages in the performance of any public work contract without having been registered in violation of the requirements of Section 1725.5 or this section, the Labor Commissioner shall issue and serve a stop order prohibiting the use of the unregistered contractor or the unregistered subcontractor on all public works until the unregistered contractor or unregistered subcontractor is registered. The stop order shall not apply to work by registered contractors or subcontractors on the public work.

(2) A stop order may be personally served upon the contractor or subcontractor by either of the following methods:

(A) Manual delivery of the order to the contractor or subcontractor personally.

(B) Leaving signed copies of the order with the person who is apparently in charge at the site of the public work and by thereafter mailing copies of the order by first class mail, postage prepaid to the contractor or subcontractor at the address on file with either of the following:

(i) The Contractors' State License Board.

(ii) The Secretary of State.

(3) The stop order shall be effective immediately upon service and shall be subject to appeal by the party contracting with the unregistered contractor or subcontractor, by the unregistered contractor or subcontractor, or both. The appeal, hearing, and any further review of the hearing decision shall be governed by the procedures, time limits, and other requirements specified in subdivision (a) of Section 238.1.

(k) Failure of a contractor or subcontractor, owner, director, officer, or managing agent of the contractor or subcontractor to observe a stop order issued and served upon him or her pursuant to subdivision (j) is guilty of a misdemeanor punishable by imprisonment in county jail not exceeding 60 days or by a fine not exceeding ten thousand dollars ($10,000), or both.

(l) This section shall apply to any bid proposal submitted on or after March 1, 2015, and any contract for public work entered into on or after April 1, 2015. This section shall also apply to the performance of any public work, as defined in this chapter, on or after January 1, 2018, regardless of when the contract for public work was entered.

(m) Penalties received pursuant to this section shall be deposited in the State Public Works Enforcement Fund established by Section 1771.3 and shall be used only for the purposes specified in that section.

(n) This section shall not apply to work performed on a public works project of twenty-five thousand dollars ($25,000) or less when the project is for construction, alteration, demolition, installation, or repair work or to work performed on a public works project of fifteen thousand dollars ($15,000) or less when the project is for maintenance work.
(Amended by Stats. 2018, Ch. 455, Sec. 2. (SB 877) Effective September 17, 2018.)

1775. (a) (1) The contractor and any subcontractor under the contractor shall, as a penalty to the state or political subdivision on whose behalf the contract is made or awarded, forfeit not more than two hundred dollars ($200) for each calendar day, or portion thereof, for each worker paid less than the prevailing wage rates as determined by the director for the work or craft in which the worker is employed for any public work done under the contract by the contractor or, except as provided in subdivision (b), by any subcontractor under the contractor.

(2) (A) The amount of the penalty shall be determined by the Labor Commissioner based on consideration of both of the following:

(i) Whether the failure of the contractor or subcontractor to pay the correct rate of per diem wages was a good faith mistake and, if so, the error was promptly and voluntarily corrected when brought to the attention of the contractor or subcontractor.

(ii) Whether the contractor or subcontractor has a prior record of failing to meet its prevailing wage obligations.

(B) (i) The penalty may not be less than forty dollars ($40) for each calendar day, or portion thereof, for each worker paid less than the prevailing wage rate, unless the failure of the contractor or subcontractor to pay the correct rate of per diem wages was a good faith mistake and, if so, the error was promptly and voluntarily corrected when brought to the attention of the contractor or subcontractor.

(ii) The penalty may not be less than eighty dollars ($80) for each calendar day, or portion thereof, for each worker paid less than the prevailing wage rate, if the contractor or subcontractor has been assessed penalties within the previous three years for failing to meet its prevailing wage obligations on a separate contract, unless those penalties were subsequently withdrawn or overturned.

(iii) The penalty may not be less than one hundred twenty dollars ($120) for each calendar day, or portion thereof, for each worker paid less than the prevailing wage rate, if the Labor Commissioner determines that the violation was willful, as defined in subdivision (c) of Section 1777.1.

(C) If the amount due under this section is collected from the contractor or subcontractor, any outstanding wage claim under Chapter 1 (commencing with Section 1720) of Part 7 of Division 2 against that contractor or subcontractor shall be satisfied before applying that amount to the penalty imposed on that contractor or subcontractor pursuant to this section.

(D) The determination of the Labor Commissioner as to the amount of the penalty shall be reviewable only for abuse of discretion.

(E) The difference between the prevailing wage rates and the amount paid to each worker for each calendar day or portion thereof for which each worker was paid less than the prevailing wage rate shall be paid to each worker by the contractor or subcontractor, and the body awarding the contract shall cause to be inserted in the contract a stipulation that this section will be complied with.

(b) If a worker employed by a subcontractor on a public works project is not paid the general prevailing rate of per diem wages by the subcontractor, the prime contractor of the project is not liable for any penalties under subdivision (a) unless the prime contractor had knowledge of that failure of the subcontractor to pay the specified prevailing rate of wages to those workers or unless the prime contractor fails to comply with all of the following requirements:

(1) The contract executed between the contractor and the subcontractor for the performance of work on the public works project shall include a copy of the provisions of this section and Sections **1771, 1776, 1777.5, 1813, and 1815.**

(2) The contractor shall monitor the payment of the specified general prevailing rate of per diem wages by the subcontractor to the employees, by periodic review of the certified payroll records of the subcontractor.

(3) Upon becoming aware of the failure of the subcontractor to pay his or her workers the specified prevailing rate of wages, the contractor shall diligently take corrective action to halt or rectify the failure, including, but not limited to, retaining sufficient funds due the subcontractor for work performed on the public works project.

(4) Prior to making final payment to the subcontractor for work performed on the public works project, the contractor shall obtain an affidavit signed under penalty of perjury from the subcontractor that the subcontractor has paid the specified general prevailing rate of per diem wages to his or her employees on the public works project and any amounts due pursuant to Section 1813.

(c) The Division of Labor Standards Enforcement shall notify the contractor on a public works project within 15 days of the receipt by the Division of Labor Standards Enforcement of a complaint of the failure of a subcontractor on that public works project to pay workers the general prevailing rate of per diem wages.
(Amended by Stats. 2011, Ch. 677, Sec. 1. (AB 551) Effective January 1, 2012.)

1776 (a) Each contractor and subcontractor shall keep accurate payroll records, showing the name, address, social security number, work classification, straight time and overtime hours worked each day and week, and the actual per diem wages paid to each journeyman, apprentice, worker, or other employee employed by him or her in connection with the public work. Each payroll record shall contain or be verified by a written declaration that it is made under penalty of perjury, stating both of the following:

(1) The information contained in the payroll record is true and correct.

(2) The employer has complied with the requirements of Sections 1771, 1811, and 1815 for any work performed by his or her employees on the public works project.

(b) The payroll records enumerated under subdivision (a) shall be certified and shall be available for inspection at all reasonable hours at the principal office of the contractor on the following basis:

(1) A certified copy of an employee's payroll record shall be made available for inspection or furnished to the employee or his or her authorized representative on request.

(2) A certified copy of all payroll records enumerated in subdivision (a) shall be made available for inspection or furnished upon request to a representative of the body awarding the contract and the Division of Labor Standards Enforcement of the Department of Industrial Relations.

(3) A certified copy of all payroll records enumerated in subdivision (a) shall be made available upon request by the public for inspection or for copies thereof. However, a request by the public shall be made through either the body awarding the contract or the Division of Labor Standards Enforcement. If the requested payroll records have not been provided pursuant to paragraph (2), the requesting party shall, prior to being provided the records, reimburse the costs of preparation by the contractor, subcontractors, and the entity through which the request was made. The public may not be given access to the records at the principal office of the contractor.

(C) Unless required to be furnished directly to the Labor Commissioner in accordance with paragraph (3) of subdivision (a) of Section 1771.4, the certified payroll records shall be on forms provided by the Division of Labor Standards Enforcement or shall contain the same information as the forms provided by the division. The payroll records may consist of printouts of payroll data that are maintained as computer records, if the printouts contain the same information as the forms provided by the division and the printouts are verified in the manner specified in subdivision (a).

(d) A contractor or subcontractor shall file a certified copy of the records enumerated in subdivision (a) with the entity that requested the records within 10 days after receipt of a written request.

(e) Except as provided in subdivision (f), any copy of records made available for inspection as copies and furnished upon request to the public or any public agency by the awarding body or the Division of Labor Standards Enforcement shall be marked or obliterated to prevent disclosure of an individual's name, address, and social security number. The name and address of the contractor awarded the contract or the subcontractor performing the contract shall not be marked or obliterated. Any copy of records made available for inspection by, or furnished to, a multiemployer Taft-Hartley trust fund (29 U.S.C. Sec. 186(c)(5)) that requests the records for the purposes of allocating contributions to participants shall be marked or obliterated only to prevent disclosure of an individual's full social security number, but shall provide the last four digits of the social security number. Any copy of records made available for inspection by, or furnished to, a joint labor-management committee established pursuant to the federal Labor Management Cooperation Act of 1978 (29 U.S.C. Sec. 175a) shall be marked or obliterated only to prevent disclosure of an individual's social security number.

(f) (1) Notwithstanding any other provision of law, agencies that are included in the Joint Enforcement Strike Force on the Underground Economy established pursuant to Section 329 of the Unemployment Insurance Code and other law enforcement agencies investigating violations of law shall, upon request, be provided nonredacted copies of certified payroll records. Any copies of records or certified payroll made available for inspection and furnished upon request to the public by an agency included in the Joint Enforcement Strike Force on the Underground Economy or to a law enforcement agency investigating a violation of law shall be marked or redacted to prevent disclosure of an individual's name, address, and social security number.

(2) An employer shall not be liable for damages in a civil action for any reasonable act or omission taken in good faith in compliance with this subdivision.

(g) The contractor shall inform the body awarding the contract of the location of the records enumerated under subdivision (a), including the street address, city, and county, and shall, within five working days, provide a notice of a change of location and address.

(h) The contractor or subcontractor has 10 days in which to comply, subsequent to receipt of a written notice requesting the records enumerated in subdivision (a). In the event that the contractor or subcontractor fails to comply within the 10-day period, he or she shall, as a penalty to the state or political subdivision on whose behalf the contract is made or awarded, forfeit one hundred dollars ($100) for each calendar day, or portion thereof, for each worker, until strict compliance is effectuated. Upon the request of the Division of Labor Standards Enforcement, these penalties shall be withheld from progress payments then due. A contractor is not subject to a penalty assessment pursuant to this section due to the failure of a subcontractor to comply with this section.

(i) The body awarding the contract shall cause to be inserted in the contract stipulations to effectuate this section.

(j) The director shall adopt rules consistent with the California Public Records Act (Chapter 3.5 (commencing with Section 6250) of Division 7 of Title 1 of the Government Code) and the Information Practices Act of 1977 (Title 1.8 (commencing with Section 1798) of Part 4 of Division 3 of the Civil Code) governing the release of these records, including the establishment of reasonable fees to be charged for reproducing copies of records required by this section.
(Amended by Stats. 2014, Ch. 28, Sec. 71. (SB 854) Effective June 20, 2014.)

1777.5. (a) (1) This chapter does not prevent the employment upon public works of properly registered apprentices who are active participants in an approved apprenticeship program.

(2) For purposes of this chapter, “apprenticeship program” means a program under the jurisdiction of the California Apprenticeship Council established pursuant to Section 3070.

(b) (1) Every apprentice employed upon public works shall be paid the prevailing rate of per diem wages for apprentices in the trade to which he or she is registered and shall be employed only at the work of the craft or trade to which he or she is registered.

(2) Unless otherwise provided by a collective bargaining agreement, when a contractor requests the dispatch of an apprentice pursuant to this section to perform work on a public works project and requires the apprentice to fill out an application or undergo testing, training, an examination, or other preemployment process as a condition of employment, the apprentice shall be paid for the time spent on the required preemployment activity, including travel time to and from the required activity, if any, at the prevailing rate of per diem wages for apprentices in the trade to which he or she is registered. Unless otherwise provided by a collective bargaining agreement, a contractor is not required to compensate an apprentice for the time spent on preemployment activities if the apprentice is required to take a preemployment drug or alcohol test and he or she fails to pass that test.

(c) Only apprentices, as defined in Section 3077, who are in training under apprenticeship standards that have been approved by the Chief of the Division of Apprenticeship Standards and who are parties to written apprentice agreements under Chapter 4 (commencing with Section 3070) of Division 3 are eligible to be employed at the apprentice wage rate on public works. The employment and training of each apprentice shall be in accordance with either of the following:

(1) The apprenticeship standards and apprentice agreements under which he or she is training.

(2) The rules and regulations of the California Apprenticeship Council.

(d) If the contractor to whom the contract is awarded by the state or any political subdivision, in performing any of the work under the contract, employs workers in any apprenticeable craft or trade, the contractor shall employ apprentices in at least the ratio set forth in this section and may apply to any apprenticeship program in the craft or trade that can provide apprentices to the site of the public work for a certificate approving the contractor under the apprenticeship standards for the employment and training of apprentices in the area or industry affected. However, the decision of the apprenticeship program to approve or deny a certificate shall be subject to review by the Administrator of Apprenticeship. The apprenticeship program or programs, upon approving the contractor, shall arrange for the dispatch of apprentices to the contractor. A contractor covered by an apprenticeship program's standards shall not be required to submit any additional application in order to include additional public works contracts under that program. "Apprenticeable craft or trade," as used in this section, means a craft or trade determined as an apprenticeable occupation in accordance with rules and regulations prescribed by the California Apprenticeship Council. As used in this section, "contractor" includes any subcontractor under a contractor who performs any public works not excluded by subdivision (o).

(e) Before commencing work on a contract for public works, every contractor shall submit contract award information to an applicable apprenticeship program that can supply apprentices to the site of the public work. The information submitted shall include an estimate of journeyman hours to be performed under the contract, the number of apprentices proposed to be employed, and the approximate dates the apprentices would be employed. A copy of this information shall also be submitted to the awarding body, if requested by the awarding body. Within 60 days after concluding work on the contract, each contractor and subcontractor shall submit to the awarding body, if requested, and to the apprenticeship program a verified statement of the journeyman and apprentice hours performed on the contract. The information under this subdivision shall be public. The apprenticeship programs shall retain this information for 12 months.

(f) The apprenticeship program supplying apprentices to the area of the site of the public work shall ensure equal employment and affirmative action in apprenticeship for women and minorities.

(g) The ratio of work performed by apprentices to journeymen employed in a particular craft or trade on the public work may be no higher than the ratio stipulated in the apprenticeship standards under which the apprenticeship program operates if the contractor agrees to be bound by those stndards. However, except as otherwise provided in this section, in no case shall the ratio be less than one hour of apprentice work for every five hours of journeyman work.

(h) This ratio of apprentice work to journeyman work shall apply during any day or portion of a day when any journeyman is employed at the jobsite and shall be computed on the basis of the hours worked during the day by journeymen so employed. Any work performed by a journeyman in excess of eight hours per day or 40 hours per week shall not be used to calculate the ratio. The contractor shall employ apprentices for the number of hours computed as above before the end of the contract or, in the case of a subcontractor, before the end of the subcontract. However, the contractor shall endeavor, to the greatest extent possible, to employ apprentices during the same time period that the journeymen in the same craft or trade are employed at the jobsite. When an hourly apprenticeship ratio is not feasible for a particular craft or trade, the Administrator of Apprenticeship, upon application of an apprenticeship program, may order a minimum ratio of not less than one apprentice for each five journeymen in a craft or trade classification.

(i) A contractor covered by this section who has agreed to be covered by an apprenticeship program's standards upon the issuance of the approval certificate, or who has been previously approved for an apprenticeship program in the craft or trade, shall employ the number of apprentices or the ratio of apprentices to journeymen stipulated in the applicable apprenticeship standards, but in no event less than the 1-to-5 ratio required by subdivision (g).

(j) Upon proper showing by a contractor that he or she employs apprentices in a particular craft or trade in the state on all of his or her contracts on an annual average of not less than one hour of apprentice work for every five hours of labor performed by journeymen, the Administrator of Apprenticeship may grant a certificate exempting the contractor from the 1-to-5 hourly ratio, as set forth in this section for that craft or trade.

(k) An apprenticeship program has the discretion to grant to a participating contractor or contractor association a certificate, which shall be subject to the approval of the Administrator of Apprenticeship, exempting the contractor from the 1-to-5 ratio set forth in this section when it finds that any one of the following conditions is met:

(1) Unemployment for the previous three-month period in the area exceeds an average of 15 percent.

(2) The number of apprentices in training in the area exceeds a ratio of 1 to 5.

(3) There is a showing that the apprenticeable craft or trade is replacing at least one-thirtieth of its journeymen annually through apprenticeship training, either on a statewide basis or on a local basis.

(4) Assignment of an apprentice to any work performed under a public works contract would create a condition that would jeopardize his or her life or the life, safety, or property of fellow employees or the public at large, or the specific task to which the apprentice is to be assigned is of a nature that training cannot be provided by a journeyman.

(l) If an exemption is granted pursuant to subdivision (k) to an organization that represents contractors in a specific trade from the 1-to-5 ratio on a local or statewide basis, the member contractors shall not be required to submit individual applications for approval to local joint apprenticeship committees, if they are already covered by the local apprenticeship standards.

(m) (1) A contractor to whom a contract is awarded, who, in performing any of the work under the contract, employs journeymen or apprentices in any apprenticeable craft or trade shall contribute to the California Apprenticeship Council the same amount that the director determines is the prevailing amount of apprenticeship training contributions in the area of the public works site. A contractor may take as a credit for payments to the council any amounts paid by the contractor to an approved apprenticeship program that can supply apprentices to the site of the public works project. The contractor may add the amount of the contributions in computing his or her bid for the contract.

(2) (A) At the conclusion of the 2002–03 fiscal year, and each fiscal year thereafter, the California Apprenticeship Council shall distribute training contributions received by the council under this subdivision, less the expenses of the Department of Industrial Relations for administering this subdivision, by making grants to approved apprenticeship programs for the purpose of training apprentices. The grant funds shall be distributed as follows:

(i) If there is an approved multiemployer apprenticeship program serving the same craft or trade and geographic area for which the training contributions were made to the council, a grant to that program shall be made.

(ii) If there are two or more approved multiemployer apprenticeship programs serving the same craft or trade and county for which the training contributions were made to the council, the grant shall be divided among those programs based on the number of apprentices from that county registered in each program.

(iii) All training contributions not distributed under clauses (i) and (ii) shall be used to defray the future expenses of the Department of Industrial Relations for the administration and enforcement of apprenticeship standards and requirements under this code.

(B) An apprenticeship program shall only be eligible to receive grant funds pursuant to this subdivision if the apprenticeship program agrees, prior to the receipt of any grant funds, to keep adequate records that document the expenditure of grant funds and to make all records available to the Department of Industrial Relations so that the Department of Industrial Relations is able to verify that grant funds were used solely for training apprentices. For purposes of this subparagraph, adequate records include, but are not limited to, invoices, receipts, and canceled checks that account for the expenditure of grant funds. This subparagraph shall not be deemed to require an apprenticeship program to provide the Department of Industrial Relations with more documentation than is necessary to verify the appropriate expenditure of grant funds made pursuant to this subdivision.

(C) The Department of Industrial Relations shall verify that grants made pursuant to this subdivision are used solely to fund training apprentices. If an apprenticeship program is unable to demonstrate how grant funds are expended or if an apprenticeship program is found to be using grant funds for purposes other than training apprentices, then the apprenticeship program shall not be eligible to receive any future grant pursuant to this subdivision and the Department of Industrial Relations may initiate the process to rescind the registration of the apprenticeship program.

(3) All training contributions received pursuant to this subdivision shall be deposited in the Apprenticeship Training Contribution Fund, which is hereby created in the State Treasury. Upon appropriation by the Legislature, all moneys in the Apprenticeship Training Contribution Fund shall be used for the purpose of carrying out this subdivision and to pay the expenses of the Department of Industrial Relations.

(n) The body awarding the contract shall cause to be inserted in the contract stipulations to effectuate this section. The stipulations shall fix the responsibility of compliance with this section for all apprenticeable occupations with the prime contractor.

(o) This section does not apply to contracts of general contractors or to contracts of specialty contractors not bidding for work through a general or prime contractor when the contracts of general contractors or those specialty contractors involve less than thirty thousand dollars ($30,000).

(p) An awarding body that implements an approved labor compliance program in accordance with subdivision (b) of Section 1771.5 may, with the approval of the director, assist in the enforcement of this section under the terms and conditions prescribed by the director. *(Amended by Stats. 2018, Ch. 704, Sec. 17. (AB 235) Effective September 22, 2018.)*

1813. The contractor or subcontractor shall, as a penalty to the state or political subdivision on whose behalf the contract is made or awarded, forfeit twenty-five dollars ($25) for each worker employed in the execution of the contract by the respective contractor or subcontractor for each calendar day during which the worker is required or permitted to work more than 8 hours in any one calendar day and 40 hours in any one calendar week in violation of the provisions of this article. In awarding any contract for public work, the awarding body shall cause to be inserted in the contract a stipulation to this effect. The awarding body shall take cognizance of all violations of this article committed in the course of the execution of the contract, and shall report them to the Division of Labor Standards Enforcement.
(Amended (as added by Stats. 1997, Ch. 757, Sec. 6) by Stats. 2002, Ch. 28, Sec. 3. Effective January 1, 2003.)

1815. Notwithstanding the provisions of Sections 1810 to 1814, inclusive, of this code, and notwithstanding any stipulation inserted in any contract pursuant to the requirements of said sections, work performed by employees of contractors in excess of 8 hours per day, and 40 hours during any one week, shall be permitted upon public work upon compensation for all hours worked in excess of 8 hours per day at not less than $1^1/_2$ times the basic rate of pay.
(Amended by Stats. 1963, Ch. 964.)

EXCERPTS FROM THE PUBLIC CONTRACT CODE 9204

EXCERPTS FROM PUBLIC CONTRACT CODE 9204

EFFECTIVE DATE JANUARY 1, 2017

Please note section 9204 of the Public Contract Code, set forth in full below. Contractor must follow the contractual dispute resolution process specified in the Ventura County Standard Specifications, which is consistent with section 9204.

* * *

(a) The Legislature finds and declares that it is in the best interests of the state and its citizens to ensure that all construction business performed on a public works project in the state that is complete and not in dispute is paid in full and in a timely manner.

(b) Notwithstanding any other law, including, but not limited to, Article 7.1 (commencing with Section 10240) of Chapter 1 of Part 2, Chapter 10 (commencing with Section 19100) of Part 2, and Article 1.5 (commencing with Section 20104) of Chapter 1 of Part 3, this section shall apply to any claim by a contractor in connection with a public works project.

(c) For purposes of this section:

(1) "Claim" means a separate demand by a contractor sent by registered mail or certified mail with return receipt requested, for one or more of the following:

(A) A time extension, including, without limitation, for relief from damages or penalties for delay assessed by a public entity under a contract for a public works project.

(B) Payment by the public entity of money or damages arising from work done by, or on behalf of, the contractor pursuant to the contract for a public works project and payment for which is not otherwise expressly provided or to which the claimant is not otherwise entitled.

(C) Payment of an amount that is disputed by the public entity.

(2) "Contractor" means any type of contractor within the meaning of Chapter 9 (commencing with Section 7000) of Division 3 of the Business and Professions Code who has entered into a direct contract with a public entity for a public works project.

(3)(A) "Public entity" means, without limitation, except as provided in subparagraph (B), a state agency, department, office, division, bureau, board, or commission, the California State University, the University of California, a city, including a charter city, county, including a charter county, city and county, including a charter city and county, district, special district, public authority, political subdivision, public corporation, or nonprofit transit corporation wholly owned by a public agency and formed to carry out the purposes of the public agency.

(B) "Public entity" shall not include the following:

(i) The Department of Water Resources as to any project under the jurisdiction of that department.

(ii) The Department of Transportation as to any project under the jurisdiction of that department.

(iii) The Department of Parks and Recreation as to any project under the jurisdiction of that department.

(iv) The Department of Corrections and Rehabilitation with respect to any project under its jurisdiction pursuant to Chapter 11 (commencing with Section 7000) of Title 7 of Part 3 of the Penal Code.

(v) The Military Department as to any project under the jurisdiction of that department.

(vi) The Department of General Services as to all other projects.

(vii) The High–Speed Rail Authority.

(4) “Public works project” means the erection, construction, alteration, repair, or improvement of any public structure, building, road, or other public improvement of any kind.

(5) “Subcontractor” means any type of contractor within the meaning of Chapter 9 (commencing with Section 7000) of Division 3 of the Business and Professions Code who either is in direct contract with a contractor or is a lower tier subcontractor.

(d)(1)(A) Upon receipt of a claim pursuant to this section, the public entity to which the claim applies shall conduct a reasonable review of the claim and, within a period not to exceed 45 days, shall provide the claimant a written statement identifying what portion of the claim is disputed and what portion is undisputed. Upon receipt of a claim, a public entity and a contractor may, by mutual agreement, extend the time period provided in this subdivision.

(B) The claimant shall furnish reasonable documentation to support the claim.

(C) If the public entity needs approval from its governing body to provide the claimant a written statement identifying the disputed portion and the undisputed portion of the claim, and the governing body does not meet within the 45 days or within the mutually agreed to extension of time following receipt of a claim sent by registered mail or certified mail, return receipt requested, the public entity shall have up to three days following the next duly publicly noticed meeting of the governing body after the 45–day period, or extension, expires to provide the claimant a written statement identifying the disputed portion and the undisputed portion.

(D) Any payment due on an undisputed portion of the claim shall be processed and made within 60 days after the public entity issues its written statement. If the public entity fails to issue a written statement, paragraph (3) shall apply.

(2)(A) If the claimant disputes the public entity's written response, or if the public entity fails to respond to a claim issued pursuant to this section within the time prescribed, the claimant may demand in writing an informal conference to meet and confer for settlement of the issues in dispute. Upon receipt of a demand in writing sent by registered mail or certified mail, return receipt requested, the public entity shall schedule a meet and confer conference within 30 days for settlement of the dispute.

(B) Within 10 business days following the conclusion of the meet and confer conference, if the claim or any portion of the claim remains in dispute, the public entity shall provide the claimant a written statement identifying the portion of the claim that remains in dispute and the portion that is undisputed. Any payment due on an undisputed portion of the claim shall be processed and made within 60 days after the public entity issues its written statement. Any disputed portion of the claim, as identified by the contractor in writing, shall be submitted to nonbinding mediation, with the public

entity and the claimant sharing the associated costs equally. The public entity and claimant shall mutually agree to a mediator within 10 business days after the disputed portion of the claim has been identified in writing. If the parties cannot agree upon a mediator, each party shall select a mediator and those mediators shall select a qualified neutral third party to mediate with regard to the disputed portion of the claim. Each party shall bear the fees and costs charged by its respective mediator in connection with the selection of the neutral mediator. If mediation is unsuccessful, the parts of the claim remaining in dispute shall be subject to applicable procedures outside this section.

(C) For purposes of this section, mediation includes any nonbinding process, including, but not limited to, neutral evaluation or a dispute review board, in which an independent third party or board assists the parties in dispute resolution through negotiation or by issuance of an evaluation. Any mediation utilized shall conform to the timeframes in this section.

(D) Unless otherwise agreed to by the public entity and the contractor in writing, the mediation conducted pursuant to this section shall excuse any further obligation under Section 20104.4 to mediate after litigation has been commenced.

(E) This section does not preclude a public entity from requiring arbitration of disputes under private arbitration or the Public Works Contract Arbitration Program, if mediation under this section does not resolve the parties' dispute.

(3) Failure by the public entity to respond to a claim from a contractor within the time periods described in this subdivision or to otherwise meet the time requirements of this section shall result in the claim being deemed rejected in its entirety. A claim that is denied by reason of the public entity's failure to have responded to a claim, or its failure to otherwise meet the time requirements of this section, shall not constitute an adverse finding with regard to the merits of the claim or the responsibility or qualifications of the claimant.

(4) Amounts not paid in a timely manner as required by this section shall bear interest at 7 percent per annum.

(5) If a subcontractor or a lower tier subcontractor lacks legal standing to assert a claim against a public entity because privity of contract does not exist, the contractor may present to the public entity a claim on behalf of a subcontractor or lower tier subcontractor. A subcontractor may request in writing, either on his or her own behalf or on behalf of a lower tier subcontractor, that the contractor present a claim for work which was performed by the subcontractor or by a lower tier subcontractor on behalf of the subcontractor. The subcontractor requesting that the claim be presented to the public entity shall furnish reasonable documentation to support the claim. Within 45 days of receipt of this written request, the contractor shall notify the subcontractor in writing as to whether the contractor presented the claim to the public entity and, if the original contractor did not present the claim, provide the subcontractor with a statement of the reasons for not having done so.

(e) The text of this section or a summary of it shall be set forth in the plans or specifications for any public works project that may give rise to a claim under this section.

(f) A waiver of the rights granted by this section is void and contrary to public policy, provided, however, that (1) upon receipt of a claim, the parties may mutually agree to waive, in writing, mediation and proceed directly to the commencement of a civil action or binding arbitration, as applicable; and (2) a

public entity may prescribe reasonable change order, claim, and dispute resolution procedures and requirements in addition to the provisions of this section, so long as the contractual provisions do not conflict with or otherwise impair the timeframes and procedures set forth in this section.

(g) This section applies to contracts entered into on or after January 1, 2017.

(h) Nothing in this section shall impose liability upon a public entity that makes loans or grants available through a competitive application process, for the failure of an awardee to meet its contractual obligations.

(i) This section shall remain in effect only until January 1, 2027, and as of that date is repealed, unless a later enacted statute that is enacted before January 1, 2027, deletes or extends that date.

Ventura County Standard Specifications Table of Contents

VENTURA COUNTY STANDARD SPECIFICATIONS - TABLE OF CONTENTS

PART 1 - GENERAL PROVISION

SECTION 0 - SSPWC ADOPTION AND MODIFICATION

0-1 STANDARD SPECIFICATIONS 1
0-2 DELETIONS 1
0-3 NUMBERING OF SECTIONS 1
0-4 ADDITIONS 1

SECTION 1 - TERMS, DEFINITIONS, ABBREVIATIONS, UNITS OF MEASURE AND SYMBOL

1-1 GENERAL 2
1-2 TERMS AND DEFINITIONS 2
1-3 ABBREVIATIONS 4
1-3.1 General. 4
1-3.2 Common Usage 4
1-3.3 Institutions. 7
1-3.4 Building Codes. 7
1-3.5 Reference Documents. 7
1-4 UNITS OF MEASURE 8
1-4.1 General. 8
1-4.1.1 Units for Work 8
1-4.2 Units of Measure and Their Abbreviations 8
1-5 SYMBOLS 8

SECTION 2 - SCOPE AND CONTROL OF WORK

2-1 AWARD AND EXECUTION OF CONTRACT 9
2-1.1 Award of Contract 9
2-1.2 Notice of Award. 9
2-1.3 Execution of Contract Documents. 9
2-1.4 Failure to Execute Documents. 9
2-1.5 Return of Proposal Guarantees. 9
2-2 ASSIGNMENT 9
2-3 SUBCONTRACTS. 10
2-3.1 General. 10
2-3.1.1 Use of Debarred Subcontractors Prohibited. 10
2-3.2 Additional Responsibilities. 10
2-3.3 Status of Subcontractors. 10
2-3.3.1 Subcontracts. 10
2-3.3.2 Contractor Responsible. 10
2-3.3.3 Specialty Contractors 11
2-4 CONTRACT BONDS. 11
2-4.1 Bond Forms 11
2-5 PLANS AND SPECIFICATIONS 11
2-5.1 General. 11
2-5.1.1 Specifications Captions. 11
2-5.2 Precedence of Contract Documents. 12
2-5.3 Shop Drawings, Working Drawings, and Submittals. 12
2-5.3.1 General. 12
2-5.3.2 Working Drawings. 12
2-5.3.3 Shop Drawings. 13
2-5.3.4 Supporting Information 13
2-5.4 Record Drawings. 13
2-6 WORK TO BE DONE. 13
2-6.1 Manufacturer's Recommendations. 13
2-6.2 Testing of Installed Components 13
2-6.3 Training of Agency Personnel 13
2-7 SUBSURFACE DATA. 14
2-8 RIGHTS-OF-WAY. 14

2-9 SURVEYING 14
2-9.1 Permanent Survey Markers. 14
2-9.2 Survey Service. 14
2-9.2.1 Open Areas. 14
2-9.2.2 Utilities. 14
2-9.3 Contractor's Surveys. 14
2-9.3.1 Errors in Surveys. 14
2-9.4 Line and Grade. 14
2-9.5 Quantity Surveys. 14
2-9.6 Payment for Surveys. 15
2-10 AUTHORITY OF BOARD AND ENGINEER. 15
2-10.1 Decisions in Writing. 15
2-11 INSPECTION. 15
2-11.1 Permit Inspections. 15
2-11.2 Structural Observation. 15
2-12 SPECIAL NOTICES 15
2-13 AGENCY PERSONNEL AND AUTHORITY 15
2-13.1 General. 15
2-13.2 Engineer. 16
2-13.3 Department Directors (Public Works Agency). 16
2-13.4 Project manager. 17
2-13.5 Inspector. 17
2-13.6 Other Agency Personnel and Consultants. 17
2-13.6.1 Materials Engineer. 17
2-13.6.2 Surveyors & Technicians. 17
2-13.6.3 Other Persons. 17
2-13.6.4 Consultants. 17

SECTION 3 - CHANGES IN WORK

3-1 CHANGES REQUESTED BY THE CONTRACTOR 18
3-1.1 General. 18
3-1.2 Payment for Changes Requested by the Contractor. 18
3-2 CHANGES INITIATED BY THE AGENCY 18
3-2.1 General. 18
3-2.2 Payment for Changes Initiated by the Agency. 18
3-2.2.1 Contract Unit Prices. 18
3-2.2.2 Stipulated Unit Prices. 18
3-2.2.3 Pricing. 18
3-2.2.4 Non-Agreed Prices 18
3-3 EXTRA WORK 18
3-3.1 General. 18
3-3.2 Payment. 18
3-3.2.1 General. 18
3-3.2.2 Basis for Establishing Costs 19
3-3.2.3 Markup. 20
3-3.3 Daily Extra Work Reports by Contractor. 20
3-4 CHANGED CONDITIONS. 21
3-5 DISPUTED WORK 21

SECTION 4 - CONTROL OF MATERIALS

4-1 MATERIALS AND WORKMANSHIP 22
4-1.1 General. 22
4-1.1.1 Materials Furnished by Agency. 22
4-1.2 Protection of Work and Materials. 22
4-1.3 Inspection Requirements 22
4-1.3.1 General. 22
4-1.3.2 Inspection of Materials Not Locally Produced. 22
4-1.3.3 Inspection by the Agency. 23
4-1.3.4 Certificates of Compliance. 23
4-1.4 Tests of Materials. 23
4-1.5 Certification. 23
4-1.6 Trade Names or Equals 23
4-1.6.1 Compatibility with Design. 23
4-1.6.2 Trade Names Listed. 24
4-1.7 Weighing Equipment. 24
4-1.8 Calibration of Testing Equipment. 24

SECTION 5 - UTILITIES

5-1 LOCATION. 25
5-2 PROTECTION. 25
5-3 REMOVAL. 25
5-4 RELOCATION. 26
5-5 DELAYS. 26
5-5.1 Cooperation During Utility Relocation. 26
5-6 COOPERATION. 26

SECTION 6 - PROSECUTION, PROGRESS AND ACCEPTANCE OF WORK

6-1 CONSTRUCTION SCHEDULE AND COMMENCEMENT OF WORK. 27
6-1.1 Beginning of Work. 28
6-1.2 Starting Work. 28
6-1.3 Work Sequence. 28
6-1.4 Resources Required. 28
6-2 PROSECUTION OF WORK 28
6-3 SUSPENSION OF WORK 28
6-3.1 General. 28
6-3.2 Archaeological and Paleontological Discoveries. 29
6-3.3 Temporary Suspension of Work. 29
6-4 TERMINATION OF CONTRACT FOR DEFAULT 29
6.4.1 General 29
6-4.2 Notice to Cure 29
6-4.3 Notice of Termination for Default 29
6-4.4 Responsibilities of the Surety 29
6-4.5 Payment 30
6-5 TERMINATION OF CONTRACT. 30
6-6 DELAYS AND EXTENSIONS OF TIME 30
6-6.1 General. 30
6-6.2 Extensions of Time. 30
6-6.3 Payment for Delays to Contractor. 30
6-6.4 Written Notice and Report. 31
6-6.4.1 Documentation of Delays. 31
6-7 TIME OF COMPLETION 31
6-7.1 General. 31
6-7.2 Working Day. 31
6-7.2.1 Holidays. 31
6-7.2.2 Landscape Maintenance Period. 32
6-7.3 Contract Time Accounting. 32
6-7.4 Starting Date for Contract Time and Notice to Proceed. 32

6-8 COMPLETION, ACCEPTANCE AND WARRANTY. 32
6-8.1 Completion and Acceptance. 32
6-8.2 Warranty and Correction. 32
6-8.3 No Waiver of Legal Rights. 33
6-8.4 Landscape Maintenance Period. 33
6-8.5 Non-complying Work. 33
6-8.6 Written Warranties. 33
6-9 LIQUIDATED DAMAGES. 33
6-10 USE OF IMPROVEMENT DURING CONSTRUCTION. 33
6-10.1 Use of Improvements - Exceptions. 33
6-11 NOTICE OF POTENTIAL CLAIM FOR ADDITIONAL COMPENSATION. 34
6-12 DISPUTES AND CLAIMS; PROCEDURE. 34
6-12.1 GENERAL. 34
6-12.2 ADMINISTRATIVE REVIEW. 35
6-12.3 MEDIATION. 35
6-12.4 ARBITRATION. 36
6-13 CONTRACTOR'S WORK HOURS 36
6-13.1 Working Hours Limitations. 36
6-13.2 Regular Work Schedule. 36
6-13.3 Exceptions. 36

SECTION 7 - RESPONSIBILITIES OF THE CONTRACTOR

7-1 CONTRACTOR'S EQUIPMENT AND FACILITIES. 37
7-1.1 General 37
7-1.2 Temporary Utility Services 37
7-1.3 Crushing and Screening Operations 37
7-2 LABOR 37
7-2.1 General. 37
7-2.1.1 Special Qualifications. 37
7-2.2 Laws. 37
7-2.2.1 Apprentices. 37
7-2.2.2 Contractors' Duties Concerning Labor Code Compliance. 37
7-2.3 Payroll Records. 38
7-2.4 Hours of Labor. 38
7-3 INDEPENDENCE OF CONTRACTOR, INDEMNIFICATION AND POLLUTION 39
7-3.1 Independence of Contractor. 39
7-3.2 Indemnification and Hold Harmless Clause. 39
7-3.3 Contamination and Pollution. 39
7-4 INSURANCE REQUIREMENTS 39
7-4.1 Workers' Compensation Insurance. 39
7-4.1.1 Coverage. 39
7-4.1.2 Certification. 39
7-4.2 Commercial General Liability Insurance 40
7-4.2.1 Insurance Classes. 40
7-4.2.2 Coverage Exceptions. 40
7-4.2.3 Excess Liability Policies. 40
7-4.3 Commercial Automobile Liability Insurance 40
7-4.4 Property Insurance 40
7-4.5 Other Insurance Provisions. 40
7-4.5.1 Insurance Company Qualifications. 40
7-4.5.2 Primary Coverage. 40
7-4.5.3 Aggregate Limits Exceeded. 40
7-4.5.4 Liability in Excess of Limits. 40
7-4.5.5 Additional Insured Endorsements. 40
7-4.5.6 Waiver of Subrogation Rights. 40
7-4.5.7 Cancellation Notice Required. 41
7-4.5.8 Documentation Required. 41

7-5 PERMITS. 41
7-5.1 Highway and Railroad Permits. 41
7-5.2 Grading Ordinance 41
7-5.2.1 General. 41
7-5.2.2 Permits Required. 41
7-5.2.3 Imported and Exported Material. 41
7-5.2.4 Exemptions from Permit. 41
7-5.3 Building Permit. 42
7-5.3.1 Agency Furnished Permits. 42
7-5.3.2 Contractor Furnished Permits 42
7-5.4 Coastal Zone Permits. 42
7-5.4.1 Agency Furnished Permits. 42
7-5.4.2 Contractor Furnished Permits. 42
7-6 THE CONTRACTOR'S REPRESENTATIVE. 42
7-7 COOPERATION AND COLLATERAL WORK. 42
7-8 WORK SITE MAINTENANCE. 42
7-8.1 General. 42
7-8.2 Air Pollution Control. 42
7-8.3 Noise Control. 42
7-8.4 Storage of Equipment and Materials. 42
7-8.4.1 General. 42
7-8.4.2 Storage in Public Streets. 42
7-8.5 Sanitary Sewers. 43
7-8.5.1 General. 43
7-8.5.2 Sewage Bypass and Pumping Plan. 43
7-8.5.3 Spill Prevention and Emergency Response Plan. 43
7-8.6 Water Pollution Control 43
7-8.6.1 Compliance with NPDES General Construction Permit 44
7-8.6.2 Compliance with NPDES MS4 Permit. 44
7-8.6.3 Plan. 45
7-8.6.4 Measures. 45
7-8.6.5 Monitoring and Reporting 45
7-8.6.6 Dewatering Activities 45
7-8.6.7 Payment. 46
7-8.7 Drainage Control. 46
7-8.8 Final Cleaning. 46
7-9 PROTECTION AND RESTORATION OF EXISTING IMPROVEMENTS. 47
7-10 PUBLIC CONVENIENCE AND SAFETY 47
7-10.1 Access. 47
7-10.2 Traffic Control. 47
7-10.3 Haul Roads. 48
7-10.4 Safety 48
7-10.4.1 Work Site Safety. 48
7-10.4.2 Safety Orders. 48
7-10.4.3 Use of Explosives. 48
7-10.4.4 Hazardous Substances. 49
7-10.4.5 Confined Spaces 49
7-10.4.5.1 Confined Space Entry Program (CSEP). 49
7-10.4.5.2 Permit-Required Confined Spaces 49
7-10.5 Security and Protective Devices. 49
7-10.5.1 General 49
7-10.5.2 Security Fencing 49
7-10.5.3 Steel Plate Covers. 50
7-11 PATENT FEES OR ROYALTIES. 50
7-12 ADVERTISING. 50
7-13 LAWS TO BE OBSERVED. 50
7-13.1 Mined Material 50
7-14 ANTITRUST CLAIMS. 50
7-15 RECYCLABLE CONSTRUCTION & DEMOLITION WASTES. 50
7-16 EQUAL EMPLOYMENT OPPORTUNITY. 50
7-17 LOSS OR DAMAGE TO THE WORK. 50
7-18 ACTS OF GOD. 50

SECTION 8 - FACILITIES FOR AGENCY PERSONNEL

8-1 GENERAL. 51
8-2 EQUIPMENT FOR FIELD OFFICES. 51

SECTION 9 - MEASUREMENT AND PAYMENT

9-1 MEASUREMENT OF QUANTITIES FOR UNIT PRICE WORK 52
9-1.1 General 53
9-1.2 Methods of Measurement. 53
9-1.3 Certified Weights. 53
9-1.4 Units of Measurement. 53
9-2 LUMP SUM BID ITEMS. 53
9-3 PAYMENT 53
9-3.1 General 53
9-3.2 Partial and Final Payment. 53
9-3.2.1 Release of Withheld Contract Funds. 53
9-3.2.2 Timely Progress Payments. 54
9-3.3 Delivered Materials 55
9-3.4 Mobilization 55
9-3.4.1 Scope. 55
9-3.4.2 Payment. 56
9-4 TERMINATION OF AGENCY LIABILITY. 56

SECTION 10 - DIVERSION, CONTROL AND REMOVAL OF WATER

10-1 DESCRIPTION. 57
10-2 REQUIREMENTS. 57
10-3 DIVERSION AND CONTROL WORKS. 57
10-4 PAYMENT. 57

PART 2 CONSTRUCTION MATERIALS

SECTION 200 - ROCK MATERIALS

200-1 ROCK PRODUCTS 58
200-1.6 Stone for Riprap 58
200-1.6.1A Alternate Stone for Riprap. 58
200-1.6.2 Riprap Size 58

SECTION 206 - MISCELLANEOUS METAL ITEMS

206-3 GRAY IRON AND DUCTILE CASTINGS 59
206-3.3.2A Manhole Frame and Cover Sets 59
206-5 METAL RAILINGS. 59
206-5.2 Flexible Metal Guard Rail Materials. 59
206-5.2A Flexible Metal Guard Rail Materials; Modification. 59

SECTION 210 - PAINT AND PROTECTIVE COATINGS

210-6 STORM DRAIN HARDWARE. 59

SECTION 211 - SOIL AND AGGREGATE TESTS

211-6 SIEVE ANALYSIS. 60
211-7 Sand Equivalent Test. 60
211-8 R-VALUE. 60
211-9 SPECIFIC GRAVITY AND ABSORPTION. 60
211-10 LOS ANGELES RATTLER TEST. 60
211-11 SOUNDNESS. 60
211-12 WET AND DRY LOSS. 60
211-13 SOLUBILITY. 60
211-14 Permeability Test. 60

VENTURA COUNTY STANDARD SPECIFICATIONS - TABLE OF CONTENTS

PART 3 CONSTRUCTION METHODS

SECTION 301 - TREATED SOILS, SUBGRADE PREPARATION AND PLACEMENT OF BASE MATERIALS

301-1 SUBGRADE PREPARATION 61
301-1.3 Relative Compaction 61
301-1.3.1 Firm, Hard and Unyielding. 61
301-1.4 Subgrade Tolerances. 61
301-2 UNTREATED BASE 61
301-2.3 Compacting 61
301-2.3.1 Tolerances. 61

SECTION 302 - ROADWAY SURFACING

302-5 ASPHALT CONCRETE PAVEMENT 61
302-5.1 General 61
302-5.1.1 Asphalt Concrete Berms. 61
302-5.4 Tack Coat 61
302-5.4.1 Fog Seal. 61
302-5.9 Measurement and Payment 61
302-5.9.1 Measurement and Payment for Asphalt Berm. 61
302-5.9.2 Measurement and Payment for Fog Seal, Tack Coat, and Prime Coat. 61

SECTION 303 - CONCRETE AND MASONRY CONSTRUCTION

303-5 CONCRETE CURBS, WALKS, GUTTERS, CROSS GUTTERS, ALLEY INTERSECTIONS, ... 62
303-5.1 Requirements 62
303-5.1.4 Concrete Substitution. 62

SECTION 306 - UNDERGROUND CONDUIT CONSTRUCTION

306-1 OPEN TRENCH OPERATIONS 62
306-1.2 Installation of Pipe 62
306-1.2.1 Bedding 62
306-1.2.1.1 Bedding Material. 62
306-1.2.1.2 Sewer Pipe Bedding. 62
306-1.2.1.3 Flexible Pipe Bedding. 62
306-9 DISINFECTION. 63
306-10 WATERWORKS APPURTENANCES 63
306-10.1 Valves 63
306-10.2 Valve Boxes. 63
306-10.3 Thrust Devices. 63
306-10.4 Fire Hydrants. 63
306-10.5 Fire Hydrant Barricades. 63

SECTION 310 - PAINTING

310-5 Painting Various Surfaces 64
310-5.6 Painting Traffic Striping, Pavement Markings, and Curb Markings 64
310-5.6.8A Application of Paint - Two Coats 64

VENTURA COUNTY STANDARD SPECIFICATIONS - TABLE OF CONTENTS

PART 4

SECTION 400 - ALTERNATE ROCK PRODUCTS, ASPHALT CONCRETE, PORTLAND CEMENT CONCRETE AND UNTREATED BASE MATERIAL

400-1. Rock Products……65
400-1.1 Requirements……65
400-1.1.1 General……65

400-3 Portland Cement Concrete……65
400-4 Asphalt Concrete……65

APPENDICES

APPENDIX A	**ACCORD CERTIFICATE OF LIABILITY INSURANCE**	**66**
APPENDIX B-1	**CONSTRUCTION ELEMENT VS. TIME CHART FORM**	**67**
APPENDIX B-2	**WORK COMPLETE VS. TIME CHART FORM**	**68**
APPENDIX C-1	**CONSTRUCTION ELEMENT VS. TIME CHART SAMPLE**	**69**
APPENDIX C-2	**WORK COMPLETE VS. TIME CHART SAMPLE**	**70**
APPENDIX D	**ESCROW AGREEMENT FORM SAMPLE**	**71**
APPENDIX E	**BLANK**	**75**
APPENDIX F	**RELEASE ON CONTRACT FORM**	**76**
APPENDIX G	**PERFORMANCE AND PAYMENT BOND - SAMPLE SHOWING WORDING**	**77**

Ventura County Standard Specifications

COUNTY OF VENTURA
PUBLIC WORKS AGENCY
STANDARD SPECIFICATIONS
PART 1 - GENERAL PROVISIONS

SECTION 0 - SSPWC ADOPTION AND MODIFICATIONS

0-1 STANDARD SPECIFICATIONS

Except as hereinafter provided or as modified by the Special Provisions, the provisions of Parts 2 through 5 of the 2015 edition of the Standard Specifications for Public Works Construction (referred to as SSPWC), published by BNi Building News, Los Angeles, are part of these Standard Specifications.

0-2 DELETIONS

The following portions of SSPWC are hereby deleted: Part 1 and Sections 200-1.6.2, and 301-1.4.

0-3 NUMBERING OF SECTIONS

The numbering in these modifications is compatible with the numbering in SSPWC. References to whole sections of SSPWC and these modifications are preceded by the word "Section", references to parts of sections show numbers only, such as "211-5", except at the beginning of a sentence, the word "Section" precedes the number. Standard Special Provisions, if included, are numbered as Sections 901 through 999. The Special Provisions are numbered starting with Section 1000 or higher.

Cross-references contained in SSPWC to sections deleted by 0-2 hereof shall be references to the sections of like number contained herein.

0-4 ADDITIONS

The sections that follow, either, replace sections of like number in SSPWC which were deleted in 0-2 above, modify sections of SSPWC, or add material not in SSPWC.

SECTION 1 - TERMS, DEFINITIONS, ABBREVIATIONS, UNITS OF MEASURE AND SYMBOLS

1-1 GENERAL Unless otherwise stated, the words directed, required, permitted, ordered, instructed, designated, considered necessary, prescribed, approved, acceptable, satisfactory, or words of like meaning, refer to actions, expressions, and prerogatives of the Engineer.

1-2 TERMS AND DEFINITIONS

Acceptance--The formal written acceptance by the Agency of the Work which has been completed in all respects in accordance with the Plans and Specifications and any Modifications thereof.

Addendum--Written or graphic instrument issued prior to the opening of Bids which clarifies, corrects or changes the bidding or Contract Documents. The term "Addendum" shall include bulletins and all other types of written notices issued to potential bidders prior to opening of Bids.

Agency--The legal entity for which the Work is being performed.

Agreement--See Contract.

Base--A layer of specified material of planned thickness placed immediately below the pavement or surfacing.

Bid--The offer or proposal of the Bidder submitted on the prescribed form setting forth the prices for the Work.

Bidder--Any individual, firm, partnership, corporation, or combination thereof, submitting a Bid for the Work, acting directly or through a duly authorized representative.

Board--The officer or body constituting the awarding authority of the Agency.

Bond--Bid, performance and payment bond or other instrument of security.

Cash Contract--A contract financed by means other than special assessments.

Certificate of Compliance—A written document signed and submitted by a supplier or manufacturer that certifies that the material or assembled material supplied to the Work site conforms to the requirements of the Contract Documents.

Change Order--A written order to the Contractor signed by the Agency directing an addition, deletion or revision in the Work, or an adjustment in the Contract Price or the Contract time issued after the effective date of the Contract. A Change Order may or may not also be signed by the Contractor.

Code--The terms Government Code, Labor Code, etc. refer to codes of the State of California.

Consultant--A professional engineer, architect, landscape architect or other professional who designed the project or performed other services for the Agency on the project.

Contract--The written agreement between the Agency and the Contractor covering the Work.

Contract Documents--The Contract, Addenda, notice inviting bids, instruction to bidders; Bid (including documentation accompanying the Bid and any post-bid documentation submitted prior to the Notice of Award) when attached as an exhibit to the Contract, the Bonds, permits from jurisdictional regulatory agencies, Special Provisions, Plans, Standard Plans, Standard Specifications, Reference Specifications, Change Orders and Supplemental Agreements.

Contractor--The individual, partnership, corporation, joint venture, or other legal entity having a Contract with the Agency to perform the Work. In the case of work being done under permit issued by the Agency, the Permittee shall be construed to be the Contractor. The term "prime contractor" shall mean Contractor.

Contract Price--The total amount of money for which the Contract is awarded.

Contract Unit Price--The amount shown in the Bid for a single unit of an item of work.

County Sealer--The Sealer of Weights and Measures of the county in which the Contract is let.

Days--Days shall mean consecutive calendar days unless otherwise specified.

Daily Extra Work Reports--Reports on Agency furnished forms as required by 3-3.

Disputed Work--Work in which Agency and Contractor are in disagreement.

Due Notice--A written notification, given in due time, of a proposed action where such notification is required by the Contract to be given a specified interval of time (usually 48 hours or two Working Days) prior to the commencement of the contemplated action. Notification may be from Engineer to Contractor or from Contractor to Engineer.

Electrolier--Street light assembly complete, including foundation, standard, luminaire arm, luminaire, etc.

Engineer--The Director of Public Works Agency acting either directly or through properly authorized agents, such agents acting within the scope of the particular duties delegated to them.

Field Directive--A written communication from the Engineer to the Contractor that does not make any Modification to the Contract Documents. It is used only to answer Contractor's questions and to provide decisions as specified in the Contract Documents.

Geotextile--Synthetic fiber used in civil engineering applications, serving the primary function of separation and filtration.

House Connection Sewer--A sewer, within a public street or right of way, proposed to connect any parcel, lot, or part of a lot with a main line sewer.

House Sewer--A sewer, wholly within private property, proposed to connect any building to a house connection sewer.

Luminaire--The lamp housing including the optical and socket assemblies (and ballast if so specified).

Major Bid Item--A single Contract item constituting 10% or more of the original Contract Price.

Mast Arm--The structural member or bracket, which, when mounted on a Standard, supports the luminaire.

Modification--Includes Change Orders and Supplemental Agreements. A Modification may only be issued after the effective date of the Contract.

Notice of Award--The written notice by the Agency to the successful Bidder stating that upon compliance by it with the required conditions, the Agency will execute the Contract.

Notice to Proceed--A written notice given by the Agency to the Contractor fixing the date on which the Contract time will start.

Owner--Same meaning as Agency.

Person--Any individual, firm, association, partnership, corporation, trust, joint venture, or other legal entity.

Plans--The drawings, profiles, cross sections, Standard Plans, working drawings, shop drawings, and supplemental drawings, or reproductions thereof, approved by the Engineer, which show the location, character, dimensions, or details of the Work.

Private Contract--Work subject to Agency inspection, control, and approval, involving private funds, not administered by the Agency.

Prompt--The briefest interval of time required for a considered reply, including time required for approval by a governing body.

Proposal--See Bid.

Reference Specifications--Those bulletins, standards, rules, methods of analysis or testing, codes, and specifications of other agencies, engineering societies, or industrial associations referred to in the Contract Documents. These refer to the latest edition, including amendments in effect and published at the time of advertising the project or issuing the permit, unless specifically referred to by edition, volume, or date.

Roadway--The portion of a street reserved for vehicular use.

Service Connection-All or any portion of the conduit cable or duct including meter, between a utility distribution line and an individual consumer

Service Lateral Connection-The interface of the House Connection Sewer with the host pipe.

Sewer--Any conduit intended for the reception and transfer of sewage and fluid industrial waste.

Shop Drawings—Drawings showing details of manufactured or assembled products proposed to be incorporated in the Work.

Special Provisions--Any provisions which supplement or modify the Standard Specifications.

Specifications--Standard Specifications, Reference Specifications, Standard Special Provisions, Special Provisions, and specifications in Change Orders or Supplemental Agreements between the Contractor and the Board.

Standard—The shaft or pole used to support street lighting luminaire, traffic signal heads, mast arms, etc.

Standard Plans--Details of standard structures, devices, or instructions referred to on the Plans or in the Specifications by title or number.

Standard Special Provisions-- Special Provisions prepared in standardized form numbered in the series 401 through 499.

1-2 DEFINITIONS (Continued)

Standard Specifications--Parts 1 through 6 of this document. See Section 0. References to whole sections will be preceded by the word "Section", references to parts of sections will show numbers only, such as "3-2", except at the beginning of a sentence, the word "Section" precedes the number.

State--The State of California.

State Standard Plans--Standard Plans prepared by State of California, Business and Transportation Agency, Department of Transportation.

Stipulated Unit Price--Unit prices established by Agency in the Contract Documents.

Storm Drain--Any conduit and appurtenances intended for the reception and transfer of storm water.

Street--Any road, highway, parkway, freeway, alley, walk or way.

Subbase--A layer of specified material of planned thickness between a base and the subgrade.

Subcontractor--An individual, firm or corporation having a direct contract with the Contractor or with any other Subcontractor for the performance of a part of the Work.

Subgrade--For roadways, that portion of the roadbed on which pavement, surfacing, base, subbase, or a layer of other material is placed. For structures, the soil prepared to support a structure.

Supervision--Supervision, where used to indicate supervision by the Engineer, shall mean the performance of obligations, and the exercise of rights, specifically imposed upon and granted to the Agency in becoming a party to the Contract. Except as specifically stated herein, supervision by the Agency shall not mean active and direct superintendence of details of the Work.

Supplemental Agreement--A written amendment of the Contract Documents signed by both parties.

Surety--See 2-4.

Utility--Tracks, overhead or underground wires, pipelines, conduits, ducts, or structures, sewers or storm drains owned, operated or maintained in or across a public right of way or private easement.

Work--That which is proposed to be constructed or done under the Contract or permit, including the furnishing of all labor, materials, equipment, and services.

Working Day--See 6-7.2 and 6.7.2.1.

Working Drawings—Drawings showing details not shown on the Plans which are required to designed by the Contractor

1-3 ABBREVIATIONS

1-3.1 General. The abbreviations herein, together with others in general use, are applicable to these Standard Specifications and to all other Contract Documents.

All abbreviations and symbols used on Plans for structural steel construction shall conform to those given by the "Manual of Steel Construction" published by the American Institute of Steel Construction, Inc.

1-3.2 Common Usage

Abbreviation	Word or Words	Abbreviation	Word or Words
Aban	Abandon	l	Liters
Aband	Abandoned	Lab	Laboratory
ABS	Acrylonitrile-butadiene-styrene	Lat	Lateral
AC	Asphalt Concrete	LD	Local depression
ACP	Asbestos cement pipe	LED	Light Emitting Diode
ADA	Americans with Disabilities Act of 1990 (Public Law 101-336, 104 Sat. 1990,42 USC 12101-12213 (as amended))	LH	Lamp hole
Alt	Alternate	LL	Live load
AmerStd	American Standard	LOL	Layout line
APC	Air Placed Concrete	Long	Longitudinal
ARAM	Asphalt Rubber Aggregate Membrane	LP	Lamp post
ARHM	Asphalt Rubber Hot Mix	LPS	Low pressure sodium (Light)
AWG	American Wire Gage (non-ferrous wire)	LS	Lump sum
B/W	Back of wall	LTS	Lime treated soil
BC	Beginning of curve	m	Meters
BCR	Beginning of curb return	Maint	Maintenance
Bdry	Boundary	Max	Maximum
BF	Bottom of footing	MC	Medium curing
BM	Bench mark	MCR	Middle of curb return
BMPs	Best Management Practices	Meas	Measure
BVC	Beginning of vertical curve	MH	Manhole, maintenance hole
C&G	Curb & Gutter	Mil Spec	Military specification
C&G	Curb and gutter	Min	Minimum
CAB	Crushed aggregate base	Misc	Miscellaneous

Abbreviation	Word or Words
CALOSHA	California Occupational Safety and Health Administration
CALTRANS	California Department of Transportation
CAP	Corrugated aluminum pipe
CB	Catch Basin
Cb	Curb
CBP	Catch Basin Connection Pipe
CBR	California Bearing Ratio
C-C	Center to center
CCFRPM	Centrifugally Cast Fiberglass Reinforced Plastic Mortar
CCR	California Code of Regulations
CCTV	Closed Circuit TV
CF	Cubic foot
CF	Curb face
CFR	Code of Federal Regulations
CFS	Cubic feet per second
CHDPE	Corrugated High Density Polyethylene
CIP	Cast iron pipe
CIPP	Cast-in-place pipe
CIPPC	Cast-in-place Concrete Pipe
CL	Clearance, center line
CLF	Chain link fence
CLSM	Controlled Low Strength Material
CMB	Crushed miscellaneous base
CMC	Cement mortar-coated
CML	Cement mortar-lined
cms	Cubic meters per second
CO	Cleanout (Sewer)
Col	Column
Conc	Concrete
Conn	Connection
Const	Construct, Construction
Coord	Coordinate
CQS	Cationic Quick-Setting
CRM	Crumb Rubber Modifier
CRS	Cationic Rapid-Setting
CSEP	Confined Space Entry Plan
CSP	Corrugated steel pipe
CSPA	Corrugated steel pipe arch
CSS	Cationic Slow-Setting
CT	California Test
CTB	Cement treated base
CV	Check valve
CY	Cubic yard
D	Depth, Load of pipe
db	Decibels
Dbl	Double
DF	Douglas Fir
Dia	Diameter
DIP	Ductile iron pipe
DL	Dead load
DT	Drain tile
Dwg	Drawing
Dwy Appr	Driveway approach
Dwy	Driveway
Ea	Each
EC	End of curve
ECR	End of curb return
EF	Each face
EG	Edge of gutter
EGL	Energy grade line
El	Elevation
ELC	Electrolier lighting conduit
ELT	Extra long ton of slurry
Eng	Engineer, Engineering
EP	Edge of pavement
Esmt	Easement
ETB	Emulsion treated base

Abbreviation	Word or Words
Mon	Monument
MSDS	Material Safety Data Sheet
Mult	Multiple
MUTCD	Manual on Uniform Traffic Control Devices
MVL	Mercury vapor light
N/A	No applicable
NRCP	Nonreinforced concrete pipe
Obs	Obsolete
oc	On center
OD	Outside diameter
OE	Outer edge
Opp	Opposite
Orig	Original
PAV	Pressure Aging Vessel
PB	Pull box
PC	Point of curvature
PCC	Point of compound curvature
PCC	Portland cement concrete
PCVC	Point of compound vertical curve
PE	Polyethylene
PG	Performance Graded
PI	Point of intersection
PL	Property line
PLI	Pounds per linear inch
PMB	Processed miscellaneous base
POC	Point on curve
POT	Point on tangent
PP	Power pole
PRC	Point of reverse curve
PRCB	Precast Reinforced Concrete Box
PRVC	Point of reverse vertical curve
PSI	Pounds per square inch
PT	Point of tangency
PVC	Polyvinyl chloride
Pvmt	Pavement
Pvt R/W	Private right of way
Q	Rate of flow in cms (CFS)
Quad	Quadrangle, Quadrant
R	Radius or Resistance value
R&O	Rock and Oil
R/W	Right of way
RA	Reclaimed Asphalt or Recycling agent
RAC	Recycled asphalt concrete
RAP	Reclaimed asphalt pavement
RBAC	Rubberized asphalt concrete
RC	Reinforced concrete or Rapid Curing
RCB	Reinforced concrete box
RCE	Registered civil engineer
RCP	Reinforced concrete pipe
RCV	Remote control valve
Ref	Reference
Reinf	Reinforced or reinforcement
Res	Reservoir
RGE	Registered geotechnical engineer
RPPCC	Reclaimed Plastic Portland Cement Concrete
RR	Railroad
RSE	Registered structural engineer
RTE	Registered traffic engineer
RTFO	Rolling Thin Film Oven
RW	Reclaimed Water
S	Slope
S/W	Sidewalk
SC	Slow curing
SCCP	Steel cylinder concrete pipe
SCNs	Supplementary Cementitious Materials
SD	Storm drain
SDR	Standard dimension ratio

Abbreviation	Word or Words
EVC	End of vertical curve
Exc	Excavation
Exist or Ex	Existing
Exp Jt	Expansion joint
F & C	Frame and cover
F & I	Furnish and install
F/W	Face of wall
Fab	Fabricate
FAS	Flashing arrow sign
FD	Floor drain
Fdn	Foundation
Fed Spec	Federal Specification
FG	Finished grade
FL	Flow line
FS	Finished surface
ft - lb	foot – pound
Ftg	footing
FW	Face of wall
Ga	Gauge
Galv	Galvanized
GG	Gap graded
GIP	Galvanized iron pipe
GL	Ground line or grade line
GM	Gas meter
GP	Guy pole
Gr	Grade
Grtg	Grating
GSP	Galvanized steel pipe
H	High or height
HB	Hose bib
HC	House connection
HDPE	High density Polyethylene
HDWL	Headwall
HGL	Hydraulic grade line
Hor, Horiz	Horizontal
Hp	Horsepower
HPG	High pressure gas
HPS	High pressure sodium (Light)
HRWRA	High Range Water Reducing Admixture
Hyd, Hydr	Hydraulic
ID	Inside diameter
Incl	Include, Including
Insp	Inspection
Inv	Invert
IP	Iron pipe
J	Joules
JC	Junction chamber
Jct	Junction
JS	Junction structure
Jt	Joint
kg	Kilograms
kPa	KiloPascals
L	Length

Abbreviation	Word or Words
SE	Sand Equivalent
Sec	Section
SF	Square foot
SG	Specific gravity
SI	International System of Units (Metric)
SLC	Service Lateral Connection
Spec	Specifications
SR	Standard ratio
SS	Sanitary sewer
SSB	Select sub-base
SSP	Structural steel plate pipe
SSPA	Structural steel plate pipe arch
St Hwy	State highway
Sta	Station
Std	Standard
Str Gr	Straight grade
Str	Straight
Struc	Structural/Structure
SW	Sidewalk
SWD	Sidewalk drain
SWPPP	Storm Water Pollution Prevention Plan
SY	Square Yard
T/W	Top of wall
Tan	Tangent
TC	Top of curb
TCP	Traffic control plan
Tel	Telephone
TF	Top of footing
Topo	Topography
Tr	Tract
Trans	Transition
TRMAC	Tire rubber modified asphalt concrete
TS	Traffic signal or transition structure
TSC	Traffic signal conduit
TSS	Traffic signal standard
TTC	Temporary traffic control
TW	Top of wall
Typ	Typical
U.S.	United States
U.S.C.	United States Code
USA	Underground Service Alert
Var	Varies, Variable
VB	Valve box
VC	Vertical curve
VCP	Vitrified clay pipe
Vert	Vertical
Vol	Volume
VTCSH	Vehicle Traffic Controls Signal Heads
W	Width or Wider
WATCH	Work Area Traffic Control Handbook
WI	Wrought iron
WM	Water meter
WPJ	Weakened plane joint
WTAT	Wet Track Abrasion Test
X Conn	Cross connection
x (as in 2x4)	by
X-Sec	Cross section

1-3.3 Institutions.

Abbreviation	Word or Words
AAN	American Association of Nurserymen
AASHTO	American Association of State Highway and Transportation Officials
ACI	American Concrete Institute
AGC	Associated General Contractors of America
AISC	American Institute of Steel Construction
ANSI	American National Standards Institute
API	American Petroleum Institute
APWA	American Public Works Association
AREA	American Railway Engineering Association
ASHRAE	American Society of Heating, Refrigeration and Air-Conditioning Engineers
ASME	American Society of Mechanical Engineers
ASTM	American Society for Testing and Materials
AWPA	American Wood Preserver's Association
AWS	American Welding Society
AWWA	American Water Works Association
CBSC	California Building Standards Commission
CRSI	Concrete Reinforcing Steel Institute
EIA	Electronic Industries Association
EPA	Environmental Protection Agency
ETL	Electrical Testing Laboratories
FCC	Federal Communications Commission
IAPMO	International Association of Plumbing and Mechanical Officials
ICC	International Code Council
IEEE	Institute of Electrical and Electronics Engineers
IMSA	International Municipal Signal Association
ITE	Institute of Traffic Engineers
NEMA	National Electrical Manufacturers Association
NFPA	National Fire Protection Association
NOAA	National Oceanic and Atmospheric Administration (Department of Commerce)
RUS	Rural Utility Service
UL	Underwriters' Laboratories, Inc.
USGS	United State Geological Survey
WFCA	Western Fire Chiefs Association

1-3.4 Building Codes. The Ventura County Building Code (VCBC) and Ventura County Fire Code (VCFC) are applicable to the Work. VCBC and VCFC adopt by reference a number of uniform and national codes. Where such codes are referenced directly in the Specifications, such references shall be to the VCBC or VCFC which adopt and modify certain provisions in the referenced codes.

Abbreviation	Code	Publisher
CBC	California Building Code	CBSC
DBC	Uniform Code for Abatement of Dangerous Building	ICC
UBC	Uniform Building Code	ICC
UFC	Uniform Fire Code	ICC and WFCA
UHC	Uniform Housing Code	ICC
UMC	Uniform Mechanical Code	IAPMO
UPC	Uniform Plumbing Code	IAPMO
NEC	National Electrical Code	NFPA

1-3.5 Reference Documents.

Abbreviation	Document
HDM	Highway Design Manual, State of California, Department of Transportation, Latest Edition
MUTCD	Manual on Uniform Traffic Control Devices
SSP	Standard Plans, State of California, Department of Transportation, latest edition
SPPWC	Standard Plans for Public Works Construction, Latest edition, published by BNi Building News, Los Angeles,
SSPWC	Standard Specifications for Public Works Construction, (See Section 0-1)
SSS	Standard Specifications, State of California, Department of Transportation, latest edition
VCSS	Ventura County Standard Specifications (Division 1, Sections 0 through 10, of which this section is a part)

1-4 UNITS OF MEASURE

1-4.1 General. The International System of Units, also referred to as SI or the metric system, is the principal measurement system in these Specifications and shall be used for construction, unless otherwise stated in the Contract Documents. U. S. Standard Measure, also called U. S. Customary System, are included in parenthesis. SI units and U. S. Standard Measure in parenthesis may or may not be exactly equivalent. If U. S. Standard Measures are specified for use in the Contract Documents, then all values used for construction shall be U. S. Standard Measures shown in parentheses. However, certain material Specifications and test requirements contained herein use SI units specifically and conversions to U. S. Measures have not been included in these circumstances. When U. S. Standard Measures are not included in parentheses, the SI units shall control.

Reference is also made to ASTM E 380 for definitions of various units of the SI system and a more extensive set of conversion factors.

1-4.1.1 Units for Work. Where U. S. Standard Measure units are shown on the Plans or are specified, U. S. Standard Measure shall be used for the Work.

1-4.2 Units of Measure, Equivalents and Abbreviations

One U.S. Customary Unit	(abbreviation)	Is Equal To	#	SI Unit
mil (=0.001 in)		25.4	micrometers	(µm)
inch	(in)	25.4	millimeter	(mm)
inch	(in)	2.54	centimeter	(cm)
foot	(ft)	0.3048	meter	(m)
yard	(yd)	0.9144	meter	(m)
mile		1.6093	kilometer	(km)
square foot	(ft^2)	0.0929	square meter	(m^2)
square yard	(yd^2)	0.8361	square meter	(m^2)
cubic foot	(ft^3)	0.0283	cubic meter	(m^3)
cubic yard	(yd^3)	0.7646	cubic meter	(m^3)
acre (=43,560 ft^2)		0.4047	hectare (1ha=10,000m^2)	(ha)
gallon	(gal)	3.7854	Liter	(L)
fluid ounce	(fl. oz.)	29.5735	milliliter	(mL)
pound mass (avoirdupois)	(lbs)	0.4536	kilogram	(kg)
ounce mass	(oz)	0.02835	kilogram	(kg)
ounce mass	(oz)	28.35	grams	(g)
Ton (=2000 lb avoirdupois)		0.9072	Tonne (1 Tonne = 1000 kg)	
Poise		0.10	Pascal-second	(Pa-s)
centistoke	(cs)	1.00	square millimeter/sec.	(mm^2/s)
pound force	(lbf)	4.4482	Newton	(N)
pound per square inch	(psi)	6.8948	Kilopascal	(kPa)
pound force per foot	(lbf/ft)	14.594	Newton per meter	(N/M)
foot-pound force	(ft-lbf)	1.3558	Joules	(J)
foot-pound force per second	([ft-lbf]/s)	1.3558	Watt	(W)
part per million	(ppm)	1.00	milligram/liter	(mg/L)
Degree Fahrenheit	(°F)	0.5555	Degree Celsius	(°C)

Temperature: Celsius to Fahrenheit	Temperature: Fahrenheit to Celsius
Temperature °F = (1.8 x °C) + 32	Temperature °C = (°F - 32) / 1.8

SI Units Used in Both Systems		
Ampere (A)	second (s)	Candela (cd)
Volt (V)	decibel (db)	Lumen (lm)

Common Metric Prefixes					
kilo (k)	10^3	milli (m)	10^{-3}	nano (n)	10^{-9}
centi (c)	10^{-2}	micro (µ)	10^{-6}	pico (p)	10^{-12}

1-5 SYMBOLS

°	Degree	PL	Property line	%	Percent
'	Feet or minutes	SL	Survey line or station line	#	Number
"	Inches or seconds	CL	Center line	/	per or of (between words)
Δ	Delta, the central angle or angle between tangents			∠	Angle

SECTION 2 - SCOPE AND CONTROL OF WORK

2-1 AWARD AND EXECUTION OF CONTRACT

2-1.1 Award of Contract. The right is reserved to waive minor irregularities in the proposals and to reject any or all proposals. The award of the Contract, if it be awarded, will be to the lowest responsive, responsible Bidder, determined as provided on the Proposal Form, whose Proposal complies with all the requirements prescribed. Such award, if made, will be made within the number of Days stated in the Proposal form. If the lowest responsible Bidder refuses or fails to execute the Contract, the Agency may, within 45 additional Days, consider the next lowest Bidder to be the lowest responsive, responsible Bidder. The periods of time specified above within which the award of Contract may be made shall be subject to extension for such further period as may be agreed upon in writing by the Bidder concerned. If the Bidder's bid guarantee was in the form of a bid bond, the Bidder shall also submit a statement from the Surety that the bond has been extended for the same period.

Proposals not accompanied by a properly executed Noncollusion Affidavit required by Public Contract Code Section 7106 will be considered nonresponsive and will not be considered for award.

All bids will be compared on the basis of the quantities, amounts and unit prices, or lump sums, as shown on the Bid Proposal.

Before award, the Bidder may be required to furnish acceptable evidence of adequate capability, equipment and financial resources to adequately perform the Work. Bidders found not to be so qualified may have their bids rejected. If reasonable cause exists to believe collusion exists among Bidders, or that prices Bid are unbalanced between Bid items, any or all proposals may be rejected.

Award will not be made to a Bidder who is listed by the State Labor Commissioner as ineligible to bid, work on, or be awarded public works projects.

2-1.2 Notice of Award. Within one Day after award of Contract by the Board, the Bidder to whom Contract is awarded will be notified of award by email and telephone, or if no contact is made by telephone, then by mail. Within three business days after award of Contract, a Notice of Award will be sent, transmitting the Contract Documents to such Bidder for execution. If telephone contact is made, the Bidder may request that the Contract Documents be held in Agency's office to be picked up.

2-1.3 Execution of Contract Documents. On receipt of the Contract Documents, the Bidder shall promptly obtain the required insurance coverage, certificates of insurance, power-of-attorney and Contract bonds, execute the Contract, and transmit all required documents to the Agency.

2-1.4 Failure to Execute Documents. Should the Bidder fail to furnish Agency all required documents, properly executed, prior to the starting day of the Contract time computed as provided in 6-7.4 and stated in the Notice of Award, Agency may thereafter declare the Bidder to be in default and its Proposal guarantee forfeited.

2-1.5 Return of Proposal Guarantees. Within 10 Days after the award of the Contract, Agency will return the Proposal guarantees, other than Bidder's bonds, accompanying such of the proposals as are not to be further considered in making the award. The low and second Bidder's Proposal guarantee will be held until the Contract has been executed, after which all Proposal guarantees, except Bidders' bonds and any guarantees which have been forfeited, will be returned to the respective Bidders whose proposals they accompany.

2-2 ASSIGNMENT. No Contract or portion thereof may be assigned without consent of the Board except that the Contractor may assign money due or which will accrue to it under the Contract. If given written notice, such assignment will be recognized by the Board to the extent permitted by law, but any assignment of money shall be subject to all proper withholdings in favor of the Agency and to all deductions provided for in the Contract. All money withheld, whether assigned or not, shall be subject to being used by the Agency for completion of the Work, should the Contractor be in default.

2-3 SUBCONTRACTS.

2-3.1 General. Each Bidder shall comply with the Chapter of the Public Contract Code including Sections 4100 through 4113. The following excerpts or summaries of some of the requirements of that Chapter are included below for information.

The Bidder shall set forth in the Bid, as provided in 4104:

"(a) (1) The name, the location of the place of business, and the California contractor license number of each subcontractor who will perform work or labor or render service to the prime contractor in or about the construction of the work or improvement, or a subcontractor licensed by the State of California who, under subcontract to the prime contractor, specially fabricates and installs a portion of the work or improvement according to detailed drawings contained in the plans and specifications, in an amount in excess of one-half of 1 percent of the prime contractor's total bid or, in the case of bids or offers for the construction of streets or highways, including bridges, in excess of one-half of 1 percent of the prime contractor's total bid or ten thousand dollars ($10,000), whichever is greater.

(2) An inadvertent error in listing the California contractor license number provided pursuant to paragraph (1) shall not be grounds for filing a bid protest or grounds for considering the bid nonresponsive if the corrected contractor's license number is submitted to the public entity by the prime contractor within 24 hours after the bid opening and provided the corrected contractor's license number corresponds to the submitted name and location for that subcontractor."

If the Contractor fails to specify a Subcontractor, or specifies more than one Subcontractor for the same portion of the Work to be performed under the Contract (in excess of one-half of 1 percent of the Contractor's total bid), the Contractor shall be qualified to perform that portion itself, and shall perform that portion itself except as otherwise provided in the Code.

Except as provided in Section 4107, no prime contractor, whose Bid is accepted, shall substitute any person or Subcontractor in place of the Subcontractor listed in the original bid other than for causes and by procedures established in Section 4107.5 which provides procedures to correct a clerical error in the listing of a Subcontractor.

Section 4110 provides that a Contractor violating any of the provisions of the Chapter violates the Contract and the Board may exercise the option either to cancel the Contract or assess the Contractor a penalty in an amount of not more than 10 percent of the subcontract involved, after a public hearing.

2-3.1.1 Use of Debarred Subcontractors Prohibited. The Contractor is prohibited from performing work using a Subcontractor who is listed by the State Labor Commissioner as ineligible to work on public works projects.

2-3.2 Additional Responsibilities. The Contractor shall give personal attention to the fulfillment of the Contract and shall keep the Work under its control.

Except where the required Contractor's License Class is "B", the Contractor shall perform, with its own organization, Contract work amounting to at least 50 percent of the Contract Price except that any designated "Specialty Items" may be performed by subcontract and the amount of any such "Specialty Items" so performed may be deducted from the Contract Price before computing the amount required to be performed by the Contractor with its own organization. "Specialty Items" will be identified by the Agency in the Bid or Proposal with an "[S]". Where an entire item is subcontracted, the value of work subcontracted will be based on the Contract Unit Price. This will be determined from information submitted by the Contractor, and subject to approval by the Engineer.

Before the work of any Subcontractor is started, the Contractor shall submit to the Engineer for approval a written statement showing the work to be subcontracted giving the name, contractor license number, registration with the Department of Industrial Relations, and business of each Subcontractor and description and value of each portion of work to be subcontracted.

2-3.3 Status of Subcontractors. Subcontractors shall be considered employees of the Contractor, and the Contractor shall be responsible for their work.

2-3.3.1 Subcontracts. The Contractor shall incorporate into all subcontracts, and the Subcontractor shall incorporate into all lower tier subcontracts, all of the Plans and Specifications which are part of the Contract between the Contractor and the Agency.

2-3.3.2 Contractor Responsible. The Contractor is responsible for properly performing and completing all Work required by the Contract whether or not it employs subcontractors for certain portions of the Work. It shall coordinate the sequence and timing of its efforts and that of its subcontractors to insure the proper and timely completion of the Work.

2-3.3.3 Specialty Contractors. Where a specialty Contractor's license is required by law or by the Specifications in order to perform certain portions of the Work, the Contractor may perform such portion with its own forces if it holds the proper license. Otherwise, it shall employ a properly licensed subcontractor to perform that portion of the Work. Such requirement to employ a subcontractor does not modify the other requirements of 2-3.

2-4 CONTRACT BONDS. Before execution of the Contract by the Agency, the Bidder shall file surety bonds with the Agency to be approved by the Board in the amounts and for the purposes noted below. Bonds issued by a Surety who is listed in the latest version of U.S. Department of Treasury Circular 570, who is authorized to issue bonds in California, and whose bonding limitation shown in said circular is sufficient to provide bonds in the amount required by the Contract shall be deemed to be approved unless specifically rejected by the Agency. Bonds from all other sureties shall be accompanied by all of the documents enumerated in Code of Civil Procedure 995.660(a). The Bidder shall pay all bond premiums, costs, and incidentals.

Each bond shall incorporate, by reference, the Contract and be signed by both the Bidder and Surety and the signature of the authorized agent of the Surety shall be notarized.

The Bidder shall provide two good and sufficient surety bonds. The "Payment Bond" (Material and Labor Bond) shall be for not less than 100 percent of the Contract Price, to satisfy claims of material suppliers and mechanics and laborers employed by it on the Work. The bond shall be maintained by the Contractor in full force and effect until the Work is accepted by the Agency, and until all claims for materials and labor are paid, and shall otherwise comply with the Civil Code.

The "Performance Bond" shall be for 100 percent of the Contract Price to guaranty faithful performance of all Work, within the time prescribed, in a manner satisfactory to the Agency, and that all materials and workmanship will be free from original or developed defects. The bond must remain in effect until the end of the warranty period set forth in 6.8-2.

Should any bond become insufficient, the Contractor shall renew the bond within 10 Days after receiving notice from the Agency.

Should any Surety at any time be unsatisfactory to the Board, notice will be given the Contractor to that effect. No further payments shall be deemed due or will be made under the Contract until a new Surety shall qualify and be accepted by the Board.

Changes in the Work, or extensions of time, made pursuant to the Contract, shall in no way release the Contractor or Surety from its obligations. Notice of such changes or extensions shall be waived by the Surety.

2-4.1 Bond Forms. Bonds shall be on forms furnished by Agency.

2-5 PLANS AND SPECIFICATIONS

2-5.1 General. The Contractor shall keep at the work site a copy of the Plans and Specifications, to which the Engineer shall have access at all times.

The Plans, Specifications, and other Contract Documents shall govern the Work. The Contract Documents are intended to be complementary and cooperative. Anything specified in the Specifications and not shown on the Plans, or shown on the Plans and not specified in the Specifications, shall be as though shown or specified in both.

The Plans shall be supplemented by such working drawings and shop drawings as are necessary to adequately control the Work.

The Contractor shall ascertain the existence of any conditions affecting the cost of the Work through reasonable examination of the work site prior to submitting the Bid..

Existing improvements visible at the work site, for which no specific disposition is made on the Plans, but which interfere with the completion of the Work, shall be removed and disposed of by the Contractor.

The Contractor shall, upon discovering any error or omission in the Plans or Specifications, immediately call it to the attention of the Engineer.

2-5.1.1 Specifications Captions. Captions accompanying specification parts, sections and paragraphs are for convenience of reference only and do not limit the content of such part, section or paragraph.

The division of the Plans into parts and the division of the Specifications into divisions and sections are for the ease of reference only and does not imply the division of work between trades or subcontractors.

2-5.2 Precedence of Contract Documents. If there is a conflict between any of the Contract Documents, the document highest in precedence shall control. The precedence shall be as follows:

1) Permits issued by jurisdictional regulatory agencies.
2) Change Orders and Supplemental Agreements; whichever occurs last.
3) Contract/Agreement.
4) Addenda.
5) Bid/Proposal.
6) Special Provisions.
7) Plans.
8) Standard Plans.
9) Standard Specifications.
10) Reference Specifications.

Detail drawings shall take precedence over general drawings.

2-5.3 Shop Drawings, Working Drawings, and Submittals.

2-5.3.1 General. Submittals shall be provided, at the Contractor's expense, as required in 2-5.3.2, 2-5.3.3 and 2-5.3.4, when required by the Plans or Special Provisions, or when requested by the Engineer.

Materials shall neither be furnished nor fabricated, nor shall any work for which submittals are required be performed, before the required submittals have been reviewed and accepted by the Engineer. Neither review nor acceptance of submittals by the Engineer shall relieve the Contractor from responsibility for errors, omissions, or deviations from the Contract Documents, unless such deviations were specifically called to the attention of the Engineer in the letter of transmittal. The Contractor shall be responsible for the correctness of the submittals.

The Contractor shall allow a minimum of 20 working days for review of submittals unless otherwise specified in the Special Provisions. Each submittal shall be accompanied by a letter of transmittal.

2-5.3.2 Working Drawings. Working drawings shall be of a size and scale to clearly show all necessary details.

Six copies and one reproducible shall be submitted. If no revisions are required, 3 of the copies will be returned to the Contractor. If revisions are required, the Engineer will return one copy along with the reproducible for resubmission. Upon acceptance, the Engineer will return 2 of the copies to the Contractor and retain the remaining copies and the reproducible.

Working drawings are required in the following subsections:

TABLE 2-5.3.2 (A)

Item	Section Number	Title	Subject
1	7-8.5.2	Sanitary Sewers	Sewage Bypass and Pumping
2	7.8.6.3	Water Pollution Control	Storm Water Pollution Prevention Plan
3	7-8.6.6	Water Pollution Control	Dewatering Plan
4	7-10.2.2	Work Area Traffic Control	Traffic Control Plan
5	7-10.4..2.2	Safety	Trench Shoring
6	207-8.4	Joints	Vitrified Clay Pipe
7	207-10.2.1	General	Fabricated Steel Pipe
8	300-3.2	Cofferdams	Structure Excavation & Backfill
9	303-1.6.1	General	Falsework
10	303-1.7.1	General	Placing Reinforcement
11	303-3.1	General	Prestressed Concrete Construction
12	304-1.1.1	Shop Drawings	Structural Steel
13	304-1.1.2	Falsework Plans	Structural Steel
14	304-2.1	General	Metal Hand Railings
15	306-2.1	General	Jacking Operations
16	306-3.1	General	Tunneling Operations
17	306-3.4	Tunnel Supports	Tunneling Operations
18	306-6	Remodeling Existing Sewer Facilities	Polyethylene Liner Installation
19	306-8	Microtunneling	Microtunneling Operations

Working drawings listed above as Items 4, 5, 8, 9, 11, 12, 13, 15 and 18 shall be prepared by a Civil or Structural Engineer registered by the State of California.

2-5.3.3 Shop Drawings. Shop drawings are drawings showing details of manufactured or assembled products proposed to be incorporated into the Work. Shop drawings required shall be as specified in the Special Provisions.

2-5.3.4 Supporting Information. Supporting information is information required by the Specifications for the purposes of administration of the Contract, analysis for verification of conformance with the Specifications, the operation and maintenance of a manufactured product or system to be constructed as part of the Work, and other information as may be required by the Engineer. Six copies of the supporting information shall be submitted to the Engineer prior to the start of the Work unless otherwise specified in the Special Provisions or directed by the Engineer. Supporting information for systems shall be bound together and include all manufactured items for the system. If resubmittal is not required, three copies will be returned to the Contractor. Supporting information shall consist of the following and is required unless otherwise specified in the Special Provisions:

1) List of Subcontractors per 2-3.2.
2) List of Materials per 4-1.4.
3) Certificates of Compliance per 4-1.5.
4) Construction Schedule per 6-1.
5) Spill Prevention and Emergency Response Plan per 7-8.5.3
6) Confined Space Entry Program per 7-10.4.5.1
7) Lean concrete base mix designs per 200-4
8) Concrete mix designs per 201-1.1.
9) Asphalt concrete mix designs per 203-6.1.
10) Pipeline layout diagrams per 207-2.1
11) Equipment and materials list per 307-1
12) Controller cabinet wiring diagrams per 307-17.2.2
13) Data, including, but not limited to, catalog sheets, manufacturer's brochures, technical bulletins, specifications, diagrams, product samples, and other information necessary to describe a system, product or item. This information is required for irrigation systems, street lighting systems, and traffic signals, and may also be required for any product, manufactured item, or system.

2-5.4 Record Drawings. The Contractor shall prepare and maintain a set of prints in the Engineer's Field Office on which the locations and description of all plumbing, mechanical, and electrical facilities, which were not detailed fully on the Plans, are marked in colored pencil. Such prints shall also indicate any authorized changes from the original Plans. Such prints shall be furnished to the Engineer before final Acceptance of the Work.

2-6 WORK TO BE DONE. The Contractor shall perform all work necessary to complete the Contract in a satisfactory manner. Unless otherwise provided, it shall furnish all materials, equipment, tools, labor and incidentals necessary to complete the Work.

All work under the Contract shall be performed in accordance with the highest standards prevailing in the trades unless otherwise specified on the Plans or in the Special Provisions. Unless otherwise specified, it is the intent that the Contractor will construct a complete facility ready for use.

2-6.1 Manufacturer's Recommendations. Where the manufacturer of any materials or equipment provides written recommendations or instructions for its use or method of installation (including labels, tags, manuals, or trade literature), such recommendations or instructions shall be complied with except where the Contract Documents specifically require deviations.

2-6.2 Testing of Installed Components. Where the specifications provide that any component of the Work is to be tested, calibrated or adjusted during or after installation, such testing shall be performed by a qualified firm, approved by the Engineer. The firm performing the testing or calibration shall be employed by and paid for by the Contractor.

2-6.3 Training of Agency Personnel. Where the specifications provide for training of Agency personnel in the use or maintenance of any component of the Work, the Contractor shall arrange for and pay for competent personnel to perform the training. Contractor shall schedule the training with the Engineer.

2-7 SUBSURFACE DATA. All soil and test hole data, groundwater elevations, and soil analyses shown on the Plans or included in the Specifications apply only at the location of the test holes and to the depths shown. Soil test reports for test holes which have been drilled are available for inspection at the office of the Engineer. Additional subsurface exploration may be performed by Bidders or the Contractor at their own expense.

The indicated groundwater elevation is that existing at the date specified in the data. It is the Contractor's responsibility to determine and allow for the groundwater elevation on the date the Work is performed. A difference in groundwater elevation between what is shown in soil boring logs and what is actually encountered during construction will not be considered as a basis for Extra Work per 3-3.

Opinions, recommendations or conclusions contained in any soils report, soil boring logs, subsurface materials investigation, geological report or other similar studies, tests or reports, prepared for the Agency, are not a part of the Contract. Contractor shall be responsible for forming its own opinions and conclusions from the facts set forth in such reports.

2-8 RIGHTS-OF-WAY. Rights-of-way, easements or rights-of-entry for the Work will be provided by the Agency. Unless otherwise provided, the Contractor shall make arrangements, pay for, and assume all responsibility for acquiring, using, and disposing of additional work areas and facilities temporarily required. The Contractor shall indemnify and hold the Agency harmless from all claims for damages caused by such actions.

2-9 SURVEYING

2-9.1 Permanent Survey Markers. The Contractor shall notify the Engineer at least 7 Days before starting work to allow for the preservation of survey monuments, lot stakes (tagged), and bench marks. The Engineer, or the owner at its cost, shall file a Corner Record Form referencing survey monuments subject to disturbance in the Office of the County Surveyor prior to the start of construction and also prior to the completion of construction for the replacement of survey monuments. The Contractor shall not disturb survey monuments, lot stakes (tagged), or bench marks without the consent of the Engineer or the owner on Private Contracts. The Contractor shall bear the expense of replacing any that may be disturbed without permission. Replacement shall be done only under the direction of the Engineer by a Licensed Land Surveyor or a Registered Civil Engineer authorized to practice land surveying within the state.

When a change is made in the finished elevation of the pavement of any roadway in which a permanent survey monument is located, the Contractor shall adjust the monument cover to the new grade within 7 Days of finished paving unless otherwise specified.

2-9.2 Survey Service. The Engineer will set only the horizontal and vertical control survey points shown on the Plans. These will be set prior to the commencement of construction. The Contractor shall preserve these points as well as any other surveys established by the Engineer for use by the Contractor for the duration of their usefulness. If any survey points established by Engineer are lost or disturbed and need to be replaced, such replacement shall be by the Engineer at the expense of the Contractor. The Contractor shall employ engineers or surveyors to perform adequate surveys and staking necessary to construct the Work to the lines, elevations and grades shown on the Plans and for the Engineer's use in checking such work. Copies of the field notes or diagrams used in setting stakes shall be promptly furnished to the Engineer.

2-9.2.1 Open Areas. Where dimensions are not given on the Plans for parking lots, landscaped areas or graded areas, distances shall be scaled. Unless otherwise indicated, straight grades and smooth vertical curves shall be set between indicated elevations. Finished surfaces shall be sloped to drain in order to eliminate ponding of water.

2-9.2.2 Utilities. Section 5-5.1 requires the Contractor's cooperation during the relocation of utilities, which may require the setting of lines and grades when needed by utility owners performing relocations.

2-9.3 Contractor's Surveys. Surveying by private engineers and surveyors on the Work shall conform to the quality and practice required by the Engineer.

2-9.3.1 Errors in Surveys. The Contractor is responsible for the accuracy of all surveys except those performed by the Engineer. To assure that a survey point set by the Engineer has not been disturbed since it was set and that it was accurately set, all surveys by the Contractor shall be based on at least two survey points set by the Engineer or by other governmental surveys, in accordance with good survey practice. Should discrepancies be found between such points, the Engineer shall be notified and construction shall not proceed until the discrepancy has been resolved.

2-9.4 Line and Grade. All Work upon completion shall conform to the lines, elevations, and grades shown on the Plans.

2-9.5 Quantity Surveys. The Engineer will perform all quantity surveys for payment purposes, however, in performing such quantity surveys, it may make use of surveys performed by the Contractor.

2-9.6 Payment for Surveys. Payment for performing all of the surveying and staking as required by the Specifications and such additional surveying and staking as required by the Contractor will be made at the lump sum price set forth in the Proposal and shall be full compensation for furnishing all labor, equipment, instruments and materials necessary to perform the Work. If no bid item for surveying is included in the Proposal, the cost of surveying shall be included in the prices bid for other applicable items of work.

2-10 AUTHORITY OF BOARD AND ENGINEER. The Board has the final authority in all matters affecting the Work. Within the scope of the Contract, the Engineer has the authority to enforce compliance with the Plans and Specifications. The Contractor shall promptly comply with instructions from the Engineer or its authorized representative.

On all questions relating to quantities, the acceptability of material, equipment, or work, the execution, progress or sequence of work, and the interpretation of Specifications or drawings, the decision of the Engineer is final and binding, and shall be precedent to any payment under the Contract, unless otherwise ordered by the Board.

2-10.1 Decisions in Writing. Any and all decisions of the Engineer interpreting Specifications or drawings shall be in writing. Any purported "interpretation" which is not in writing shall not be binding upon the Agency and should not be relied upon by the Contractor.

2-11 INSPECTION

The Work is subject to inspection and approval of the Engineer. The Contractor shall notify the Engineer before noon of the working day before inspection is required. Work shall be done only in the presence of the Engineer, unless otherwise authorized. Any work done without proper inspection will be subject to rejection. The Engineer and any authorized representatives shall at all times have access to the Work during its construction at shops and yards as well as the Work site. The Contractor shall provide every reasonable facility for ascertaining that the materials and workmanship are in accordance with these specifications. Inspection of the Work shall not relieve the Contractor of the obligation to fulfill all conditions of the Contract.

2-11.1 Permit Inspections. The Contractor shall arrange for code compliance inspections by all agencies issuing permits for the Work. The Work shall not continue beyond mandatory inspection points without clearance from the controlling agency. Each agency involved shall be notified in accordance with the code they enforce or in accordance with their standard operating procedures. No extensions of time will be granted for delays occasioned by such inspections except where, through no fault of the Contractor, the inspection is delayed more than one Day beyond normal response time after proper notification has been given.
It shall be the Contractor's responsibility to see that any required inspection record card is signed off before proceeding with the next phase of the Work and completely signed off on completion of the Work.

2-11.2 Structural Observation. When the plans indicate that "Structural Observation" of specific work is required prior to Permit Inspection, Contractor shall notify Engineer, in writing, at least five working days prior to the date Contractor plans to have the work ready for structural observation. If the work is not ready for structural observation on the date indicated, Contractor shall reimburse Agency the cost of structural observer's visit to the Work site. If the work to be observed is substantially complete but is found to need correction before approval by the structural observer, Contractor shall give notice of a new date, as required above.

2-12 SPECIAL NOTICES. When specified in the Specifications or as directed by the Engineer, any notice required to be given in accordance with this subsection shall be in writing, dated, and signed by the Contractor or the Engineer. Such notices shall be served by any of the following methods:

a) Personal delivery with proof of delivery which may be made by declaration under penalty of perjury by any person over the age of 18 years. The proof of delivery shall show that delivery was performed in accordance with these provisions. Service shall be effective on the date of delivery. Notices given to the Contractor by personal delivery may be made to the Contractor's authorized representative at the Work site; or

b) Certified mail addressed to the mailing address of the recipient postage prepaid; return receipt requested. Service shall be effective on the date of the receipt of the mailing.

Simultaneously, the Agency may send the same notice by regular mail. If a notice that is sent by certified mail is returned unsigned, then delivery shall be effective pursuant to regular mail, provided the notice that was sent by regular mail is not returned.

2-13 AGENCY PERSONNEL AND AUTHORITY

2-13.1 General. The Board has complete authority for the project within the limits prescribed by law. Pursuant to resolutions duly adopted by the Board, the authority to perform certain functions has been delegated to the Director of Public Works. Agency staff personnel and Consultants delegated thereto by the Director are authorized to perform functions limited as set forth in the following list of personnel and designated duties.

2-13.2 Engineer. The Director of the Public Works Agency of the County of Ventura is the Engineer and has general authority to administer the Contract. The Engineer has the following specific authority:

(a) To issue Contract Change Orders (CCO) and to settle claims subsequent to Acceptance as follows:

Original Contract Amount	Maximum Amount of any Change Order or Claim Settlement
$50,000 or less	$5,000
greater than $50,000 and not over $250,000	10% of the original Contract amount
greater than $250,000 and not over $3,950,000	$25,000 plus 5% of the original Contract cost in excess of $250,000.
greater than $3,950,000	$210,000

CCOs and claim settlements exceeding the amounts set forth above require Board approval.

(b) To make final adjustments of quantities (FAQ) on unit price items.

(c) To accept the Work when the Contractor has completed all obligations of the Contract, in accordance with the Plans, Specifications and other Contract Documents. The Engineer also has authority to make and record the Notice of Completion.

(d) To approve progress and final payments under the Contract, including the provisions for withholding funds.

(e) To determine whether performance on the Work is satisfactory. Satisfactory performance includes compliance with all contract requirements.

(f) To approve the substitution of a Subcontractor, where allowed by law, if the listed Subcontractor does not object when notified.

(g) To suspend the Work for the benefit of the Agency.

(h) In the absence of the Agency Director, a Public Works Agency Department Director, as Deputy Director of Public Works, may exercise the Engineer's authority. Such action will be indicated by "Acting" with the Department Director's signature.

2-13.3 Department Director (Public Works Agency). The Department Director responsible for the project is designated in the Notice to Proceed. The Department Director has the following authority:

(a) To issue Contract Change Orders (CCO) as follows:

Original Contract Amount	Maximum Amount of any Change Order
Less than $500,000	$5,000
$500,000 to $1,000,000	1% of Bid Price
Greater than $1,000,000	$10,000

(b) To issue extensions of Contract time in accordance with the Contract Documents.

(c) To make final adjustment of quantities where the total does not exceed the amounts listed in (a) above.

(d) To approve the substitution of subcontractors, where allowed by law, if the listed Subcontractor does not object when notified.

(e) To determine when the Work has been completed and acknowledge in writing the completion of the Work.

2-13.4 Project manager. The Project manager responsible for the project is designated in the Notice to Proceed. This person may also be referred to as Project Engineer. The Project manager has the following authority:

(a) To interpret the Plans and Specifications.

(b) To make minor changes in the location or features of the Work where no change in cost is involved. Such changes in cost may not be the net of multiple changes.

(c) To approve substitutes for material and equipment specified by proprietary names when such material and equipment meet the Contract requirements.

(d) To approve shop drawings and submittals.

(e) To issue stop work orders when necessary to enforce the provisions of the Contract.

(f) To make determinations of each Working Day to be charged against the Contract time in accordance with 6-7.3.

(g) To take over a portion of the Work for Agency's use in accordance with 6-10.

(h) To receive all correspondence and other documents from the Contractor.

(i) To inspect the Work and perform Final Inspection subject to review by the Department Director and the Engineer.

2-13.5 Inspector. One or more inspectors will be assigned to the project by the Project manager. Substitutes may be used during absence of the assigned inspector. The Inspector has the following authority subject to review by the Project manager, Department Director and the Engineer:

(a) To view and inspect the Work, sample and test components (at the Work site and at offsite manufacturing locations), and to discuss the Work with the Contractor's field representative.

(b) To determine compliance with the Plans, Specifications and other Contract Documents and to issue warnings of noncompliance.

(c) To issue stop work notices in the following two instances only:

1) Where a safety hazard exists that has an immediate potential for serious injury or death.

2) Where the operation in progress, if continued for even a short period of time, could be adverse to the Agency's interests.

2-13.6 Other Agency Personnel and Consultants.

2-13.6.1 Materials Engineer. The Materials Engineer is designated in the Notice to Proceed. The Materials Engineer may assign one or more Materials Inspectors to the project.

Materials Inspectors have authority to sample and test material at the Work site and at offsite manufacturing or storage locations. They may furnish available written test results to the Contractor's field representative. At batch plants, they may issue warnings of noncompliance, but stop notices require the signature of the Materials Engineer or Project manager.

2-13.6.2 Surveyors & Technicians. Surveyors and technicians shall have free access to the site to perform their duties but have no authority related to Contract administration.

2-13.6.3 Other Persons. Other Agency personnel who are not involved in construction administration and the general public may be present at the site because it is their present place of work, as client/customers, as visitors, as future users of the facility, or as persons who will maintain the completed facility. Where the facility is to continue in use during construction, work access for Agency workers and client/customers shall be maintained as provided in the Special Provisions. Where the facility (or portion where construction is being performed) is not in use during construction, admittance to the Work site by Agency personnel not involved in construction administration and visitors may be allowed by the Contractor or by the inspector, subject to compliance with safety regulations. Such persons have no authority under the Contract and the Agency is not responsible for their comments, suggestions or directions.

2-13.6.4 Consultants. Consultants hired by the Agency shall have free access to the site to perform their duties but have no authority related to Contract administration, unless such duties are specifically identified in writing to the Contractor. When so identified, Consultant may perform the duties of certain Agency personnel described above.

SECTION 3 - CHANGES IN WORK

3-1 CHANGES REQUESTED BY THE CONTRACTOR

3-1.1 General. Changes in specified methods of construction may be made at the Contractor's request when approved in writing by the Engineer. Changes in the Plans and Specifications, requested in writing by the Contractor, which do not materially affect the Work and which are not detrimental to the Work or to the interests of the Agency, may be granted by the Board to facilitate the Work, when approved in writing by the Engineer. Nothing herein shall be construed as granting a right to the Contractor to demand acceptance of such changes.

3-1.2 Payment for Changes Requested by the Contractor. If such changes are granted, they shall be made at a reduction in cost or at no additional cost to the Agency. All costs to the Agency in reviewing the proposed change, or testing materials involved therein, shall be paid for by the Contractor, whether or not the change is approved.

3-2 CHANGES INITIATED BY THE AGENCY

3-2.1 General. The Agency may change the Plans, Specifications, character of the Work, or quantity of work, provided the total arithmetic dollar value of all such changes, both additive and deductive, does not exceed 25 percent of the Contract Price. Should it become necessary to exceed this limitation, the change shall be by written Supplemental Agreement between the Contractor and Agency, unless both parties agree to proceed with the change by Change Order.

Change orders shall be in writing and state the dollar value of the change or establish method of payment, any adjustment in Contract time, and, when negotiated prices are involved, shall provide for the Contractor's signature indicating its acceptance.

3-2.2 Payment for Changes Initiated by the Agency.

3-2.2.1 Contract Unit Prices. If a change is ordered in an item of work covered by a Contract unit price, and such change does not involve a substantial change in the character of the Work from that shown on the Plans or included in the Specifications, an adjustment in payment will be made based upon the increase or decrease in quantity and the Contract unit price. In the case of such an increase or decrease in a Major Bid Item, the use of this basis for the adjustment of payment will be limited to that portion of the change which, together with all previous changes to that item, is not in excess of 25% of the total cost of such item based on the original quantity and Contract unit price.

If a change is ordered in an item of work covered by a Contract unit price, and such change does involve a substantial change in the character of the Work from that shown on the Plans or included in the Specifications, an adjustment in payment will be made in accordance with 3-2.2.3.

Should any Contract item be deleted in its entirety, payment will be made only for actual costs incurred prior to notification of such deletion.

3-2.2.2 Stipulated Unit Prices. Stipulated unit prices are those established by the Agency in the Contract Documents, as distinguished from Contract unit prices submitted by the Contractor. Stipulated unit prices may be used for the adjustment of Contract changes.

3-2.2.3 Pricing. Adjustments in payments for changes other than those set forth in 3-2.2.1 and 3-2.2.2 will be determined by agreement between Contractor and Agency. If unable to reach agreement, the Agency may direct the Contractor to proceed on the basis of Extra Work in accordance with 3-3 or as set forth in 3-2.2.4.

3-2.2.4 Non-Agreed Prices. Agency may issue a change order directing the Contractor to proceed at a price set by the Agency or on the basis of Extra Work. If the Agency sets a price for the work covered by the change order, Contractor is entitled to payment for such work in accordance with 3-3 to the extent payment in accordance with 3-3 exceeds the price set by the Agency.

3-3 EXTRA WORK

3-3.1 General. New or unforeseen work will be classed as "Extra Work" when the Engineer determines that it is not covered by Contract Unit Prices or Stipulated Unit Prices.

3-3.2 Payment.

3-3.2.1 General. When the price for the Extra Work cannot be agreed upon, the Agency will pay for the Extra Work based on the accumulation of costs as provided herein.

3-3.2.2 Basis for Establishing Costs

(a) Labor. The cost of labor will be the current cost for wages prevailing for each craft or type of workers performing the Extra Work at the time the Extra Work is done, plus payment of health and welfare, pension, vacation, apprenticeship funds, and other direct costs included in the prevailing rates applicable to the project, as well as assessments or benefits required by lawful collective bargaining agreements. To the total of these labor costs, the labor surcharge set forth in the current CALTRANS Labor Surcharge and Equipment Rental Rates publication shall be applied.

The use of a labor classification which would increase the Extra Work cost will not be permitted unless the Contractor establishes the necessity for such additional costs.

Labor costs for equipment operators and helpers shall be reported only when such costs are not included in the invoice for the equipment rental. The labor cost for foremen shall be proportioned to all of their assigned work and only that applicable to Extra Work shall be paid. A foreman is defined as a lead working journeyman.

Nondirect labor costs including superintendence, payroll taxes, all types of insurance, and all other labor costs, not specifically provided for, shall be considered to be paid for as part of the markup of 3-3.2.3(a)(1).

(b) Materials. The cost of materials reported shall be at invoice or lowest current price at which such materials are locally available and delivered to the Work site in the quantities involved, plus sales tax, freight and delivery.

The Agency reserves the right to approve materials and sources of supply, or to supply materials to the Contractor if necessary for the progress of the Work. No markup shall be applied to any material provided by the Agency.

(c) Tool and Equipment Rental. No payment will be made for the use of tools which have a replacement value of $200 or less.

Regardless of ownership, the rates to be used for determining equipment rental costs shall not exceed the following:

(1) For equipment that is listed in the current CALTRANS Labor Surcharge and Equipment Rental Rates publication, the rates shown therein. The right of way delay and overtime/multiple shift factors contained therein shall be used as applicable.

(2) For equipment not listed in said CALTRANS publication, the listed rates prevailing locally at equipment rental agencies, or distributors, at the time the work is performed.

(3) For equipment rental that includes operators and helpers, the applicable cost from (1) or (2) above, plus the applicable labor costs as determined in accordance with (a) above.

The rental rates paid shall include the cost of fuel, oil, lubrication, supplies, small tools, necessary attachments, repairs and maintenance of any kind, depreciation, storage, insurance, and all incidentals.

Necessary loading and transportation costs for equipment used on the Extra Work shall be added to the other costs.

If equipment is used intermittently and, when not in use, could be returned to its rental source at less expense to the Agency than holding it at the work site, it shall be returned, unless the Contractor elects to keep it at the work site at no expense to the Agency.

All equipment shall be acceptable to the Engineer, in good working condition, and suitable for the purpose for which it is to be used. Manufacturer's ratings and manufacturer's approved modifications shall be used to classify equipment and it shall be powered by a unit of at least the minimum rating recommended by the manufacturer.

The reported rental rates for equipment already at the work site shall be for the duration of its use on the Extra Work, commencing at the time it is first put into actual operation on the Extra Work, plus the time required to move it from its previous site, and move it back to its previous site or to a closer site of next use.

3-3.2.2 Basis for Establishing Costs (Continued)

(d) Other Items. The Agency may authorize other items which may be required on the Extra Work. Such items include labor, service, material and equipment which are different in their nature from those required for the Work specified in the Contract and which are of a type not ordinarily available from the Contractor or any of its subcontractors.

Invoices covering all such items in detail shall be submitted with the request for payment.

(e) Invoices. Vendors' invoices for material, equipment rental, and other expenditures, shall be submitted with the request for payment. If the request for payment is not substantiated by invoices or other documentation, the Agency may establish the cost of the item involved at the lowest price which was current at the time of the report.

3-3.2.3 Markup

(a) Work by Contractor. The following percentage shall be added to the Contractor's costs and shall constitute the markup for all overhead and profits, and all other cost not specifically provided for:

(1) Labor 33%
(2) Materials..... 15%
(3) Equipment Rental 15%
(4) Other Items and Expenditures ... 15%

To the sum of the cost and markups provided for in this section, 1 percent shall be added as compensation for bonding.

(b) Work by Subcontractor. When all or any part of the Extra Work is performed by a Subcontractor, the markup established in 3-3.2.3(a) shall be applied to the Subcontractor's actual cost of such work. A markup of 10% on the first $5,000 of the subcontracted portion of the Extra Work and a markup of 5% on work in excess of $5,000 of the subcontracted portion of the Extra Work may be added by the Contractor.

3-3.3 Daily Extra Work Reports by Contractor. When the price for the Extra Work cannot be agreed upon, the Contractor shall submit a Daily Extra Work Report to the Engineer on forms furnished by the Agency, together with applicable delivery tickets, listing all labor, materials, and equipment involved for that day, and for other services and expenditures when authorized. Failure to submit the Daily Extra Work Report, showing the labor and equipment hours and the quantity of materials used, by the close of the next Working Day may waive any rights for that day. Failure to submit fully completed Daily Extra Work Reports, with the required supporting documentation, within ten calendar days after the Engineer makes a written request for the such reports shall waive all rights for the work covered by the requested reports. An attempt shall be made to reconcile the Daily Extra Work Report daily, and it shall be signed by the Engineer and the Contractor. In the event of disagreement, pertinent notes shall be entered by each party to explain points which cannot be resolved immediately. Each party shall retain a signed copy of the Daily Extra Work Report. Daily Extra Work Reports by Subcontractors or others shall be submitted through the Contractor.

The Daily Extra Work Report shall:

1) Show names of workers, classifications, and hours worked.
2) Describe and list quantities of materials used.
3) Show type of equipment, size, identification number, and hours of operation, including loading and transportation, if applicable.
4) Describe other services and expenditures in such detail as the Agency may require.

In addition to the Daily Extra Work Reports, the Contractor shall furnish Certified Payroll Records for the labor included in the reports before payment will be made.

3-4 CHANGED CONDITIONS. The Contractor shall notify the Engineer in writing of the following work site conditions, hereinafter called changed conditions, promptly upon their discovery and before they are disturbed:

1) Subsurface or latent physical conditions differing materially from those represented in the Contract;
2) Unknown physical conditions of an unusual nature differing materially from those ordinarily encountered and generally recognized as inherent in Work of the character being performed; and
3) Material differing from that represented in the Contract which the Contractor believes may be hazardous waste, as defined in Section 25117 of the Health and Safety Code that is required to be removed to a Class I, Class II or Class III disposal site in accordance with provisions of existing law.

The Engineer will promptly investigate conditions which appear to be changed conditions. If the Engineer determines that the conditions are changed conditions and that they will materially increase or decrease the costs of any portion of the Work, a Change Order will be issued adjusting the compensation for such portion of the Work in accordance with 3-2.2. If the Engineer determines that conditions are changed conditions and that they will materially affect the performance time, the Contractor, upon submitting a written request, will be granted an extension of time subject to the provisions of 6-6.

If the Engineer determines that the conditions of which it has been notified by the Contractor do not justify an adjustment in compensation, the Contractor will be so notified in writing. This notice will also advise the Contractor of its obligation to notify the Engineer, in writing, if the Contractor disagrees.

Should the Contractor disagree with such determination, it may submit a written notice of potential claim to the Engineer before commencing the disputed work. In the event of such a disagreement, the Contractor shall not be excused on account of that disagreement from any scheduled completion date provided for by the Contract, but shall proceed with all Work to be performed under the Contract. However, the Contractor shall retain any and all rights provided either by Contract or by law which pertain to the resolution of disputes and protests between the contracting parties. The Contractor shall proceed as provided in 3-5.

The Contractor's failure to give notice of changed conditions promptly upon their discovery and before they are disturbed shall constitute a waiver of all claims in connection therewith.

3-5 DISPUTED WORK. If the Contractor and the Agency are unable to reach agreement on disputed work, the Agency may direct the Contractor to proceed with the Work. Payment shall be as later determined by mediation or arbitration, if the Agency and the Contractor agree thereto, or as fixed in a court of law.

Although not to be construed as proceeding under Extra Work provisions, the Contractor shall keep and furnish records of disputed work in accordance with 3-3.

SECTION 4 - CONTROL OF MATERIALS

4-1 MATERIALS AND WORKMANSHIP

4-1.1 General. All materials, parts, and equipment furnished by the Contractor in the Work shall be new, high grade, and free from defects. Quality of work shall be in accordance with the generally accepted standards. Material and work quality shall be subject to the Engineer's approval.

Materials and work quality not conforming to the requirements of the Specifications shall be considered defective and will be subject to rejection. Defective work or material, whether in place or not, shall be removed immediately from the site by the Contractor, at its expense, when so directed by the Engineer.

If the Contractor fails to replace any defective or damaged work or material after reasonable notice, the Engineer may cause such work or materials to be replaced. The replacement expense will be deducted from the amount to be paid to the Contractor.

Used or secondhand materials, parts, and equipment may be used only if permitted by the Specifications.

4-1.1.1 Materials Furnished by Agency. Materials furnished by the Agency will be available at locations designated in the Special Provisions or if not designated in the Special Provisions, they will be delivered to a single location of Agency's choice within the project area. They shall be hauled to the site of installation by the Contractor at its expense, including any necessary loading and unloading that may be involved. The cost of handling and placing materials furnished by the Agency shall be considered as included in the price paid for the Contract item involving such furnished materials.

The Contractor will be held responsible for all materials furnished to it, and it shall pay all demurrage and storage charges. Furnished materials, after delivery to Contractor, lost or damaged from any cause whatsoever shall be replaced by the Contractor. The Contractor will be liable to the Agency for the cost of replacing lost or damaged furnished material and such costs may be deducted from any monies due or to become due the Contractor.

4-1.2 Protection of Work and Materials. The Contractor shall provide and maintain storage facilities and employ such measures as will preserve the specified quality and fitness of materials to be used in the Work. Stored materials shall be reasonably accessible for inspection. The Contractor shall also adequately protect new and existing work and all items of equipment for the duration of the Contract.

The Contractor shall not, without the Agency's consent, assign, sell, mortgage, hypothecate, or remove equipment or materials which have been installed or delivered and which may be necessary for the completion of the Contract.

4-1.3 Inspection Requirements

4-1.3.1 General. Unless otherwise specified, inspection is required at the source for asphalt concrete pavement mixtures, structural concrete, metal fabrication, metal casting, welding, concrete pipe manufacture, protective coating application, and similar shop or plant operations. Steel pipe in sizes less than 450 mm (18 inches), vitrified clay and cast iron pipe in all sizes are acceptable upon certification as to compliance with the Specifications, subject to sampling and testing by the Agency. Standard items of equipment such as electric motors, conveyors, elevators, plumbing fixtures, etc., are subject to inspection at the Work site only. Special items of equipment such as designed electrical panel boards, large pumps, sewage plant equipment, etc., are subject to inspection at the source, normally only for performance testing. The Specifications may require inspection at the source for other items not typical of those listed in this section.

4-1.3.2 Inspection of Materials Not Locally Produced. When the Contractor intends to purchase materials, fabricated products, or equipment from sources located more than 80 km (50 miles) outside the geographical limits of the Agency, an inspector or accredited testing laboratory (approved by the Engineer), shall be engaged by the Contractor at its expense, to inspect the materials, equipment or process. This approval shall be obtained before producing any material or equipment. The inspector or representative of the testing laboratory shall evaluate the materials for conformance with the Plans and Specifications. The Contractor shall forward reports required by the Engineer. No materials or equipment shall be shipped nor shall any processing, fabrication or treatment of such materials be done without proper inspection by the approved agent. Approval by said agent shall not relieve the Contractor of responsibility for complying with the Contract requirements.

4-1.3.3 Inspection by the Agency. The Agency will provide all inspection and testing laboratory services within 80 km (50 miles) of the geographical limits of the Agency.

4-1.3.4 Certificates of Compliance. The Engineer may require certificates of compliance with the Specifications for materials or manufactured items produced outside of the Work site. Such certificates will not relieve the Contractor from the requirements of providing material and manufactured items complying with the Specifications even though they have been incorporated into the Work.

4-1.4 Tests of Materials. Before incorporation in the Work, the Contractor shall submit samples of materials, as the Engineer may require, at no cost to the Agency. The Contractor, at its own expense, shall deliver the materials for testing to the place and at the time designated by the Engineer. Unless otherwise provided, all initial testing and a reasonable amount of retesting shall be performed under the direction of the Engineer, and at no expense to the Contractor. If the Contractor is to provide and pay for testing, the Specifications will so state.

The Contractor shall notify the Engineer in writing, at least 15 Days in advance, of its intention to use materials for which tests are specified, to allow sufficient time to perform the tests. The notice shall name the proposed supplier and source of material.

If the notice of intent to use is sent before the materials are available for testing or inspection, or is sent so far in advance that the materials on hand at the time will not last but will be replaced by a new lot prior to use on the Work, it will be the Contractor's responsibility to re-notify the Engineer when samples which are representative may be obtained.

4-1.5 Certification. The Engineer may waive materials testing requirements of the Specifications and accept the manufacturer's written certification that the materials to be supplied meet those requirements. Materials test data may be required as part of the certification.

4-1.6 Trade Names or Equals. The Contractor may supply any of the materials specified or offer an equivalent. The Engineer shall determine whether the material offered is equivalent to that specified. Adequate time shall be allowed for the Engineer to make this determination.

Whenever any particular material, process, or equipment is indicated by patent, proprietary or brand name, or by name of manufacturer, such wording is used for the purpose of facilitating its description and shall be deemed to be followed by the words **or equal**. A listing of materials is not intended to be comprehensive, or in order of preference. The Contractor may offer any material, process, or equipment considered to be equivalent to that indicated. The substantiation of offers shall be submitted as provided in the Contract Documents.

The Contractor shall, at its expense, furnish data concerning items offered by it as equivalent to those specified. The Contractor shall have the material tested as required by the Engineer to determine that the quality, strength, physical, chemical, or other characteristics, including durability, finish, efficiency, dimensions, service, and suitability are such that the item will fulfill its intended function.

Test methods shall be subject to the approval of the Engineer. Test results shall be reported promptly to the Engineer, who will evaluate the results and determine if the substitute item is equivalent. The Engineer’s findings shall be final. Installation and use of a substitute item shall not be made until approved by the Engineer.

If a substitute offered by the Contractor is not found to be equal to the specified material, the Contractor shall furnish and install the specified material.

The specified Contract completion time shall not be affected by any circumstance developing from the provisions of this section.

4-1.6.1 Compatibility with Design. Where the size, configuration, weight, fastening locations, fastening strength, utility rough-in locations, and utility capacities of equipment or devices offered by the Contractor as equivalents do not conform to those provided for in the Contract Documents or those which are necessary for equipment or devices indicated by brand names, the Contractor shall bear all costs of redesign and changes in construction necessary to adapt the offered equipment or device to the Work.

Equipment or devices will not be considered "equal" where the life cycle cost of operation, utilities and maintenance of the offered alternate is greater than those listed by brand names. Life cycle costs shall mean utility charges (demand and usage charges), maintenance, operating personnel and replacement (equipment, installation and down time expenses) all reduced to an average annual rate using the current interest rate earned on funds invested by the County Treasurer.

4-1.6.2 Trade Names Listed. Where the Agency has listed products by brand or trade name on the Plans or in the Specifications, or both, this shall not be construed as meaning every product may be used without furnishing shop drawings, without redesign of the facility or without a change in utility rough-in requirements.

Where use of products listed on the Plans or in the Specifications, or both, or where use of a substitute proposed as an "equal" product requires shop drawings, redesign of the facility, or revisions in the size and location of rough-in utility connections, or in connecting work, the Contractor shall provide any necessary shop drawings, or shall cause the preparation of any necessary redesign or revisions to the Plans at its own expense and shall bear the full cost of any necessary additional construction or reconstruction work. No work described in shop drawings, a redesign, or a revision to the Plans shall be undertaken until such shop drawings, redesign, or revisions have been approved by the Engineer. Any proposed redesign or revision to the Plans shall be accompanied by complete computations and details prepared by an appropriate licensed design professional.

4-1.7 Weighing Equipment. All scales used for proportioning materials shall be inspected for accuracy and certified within the past 12 months by the State of California Bureau of Weights and Measures, by the County Director or Sealer of Weights and Measures, or by a scale mechanic registered with or licensed by the County.

The accuracy of the work of a scale service agency, except as stated herein, shall meet the standards of the California Business and Professions Code and the California Code of Regulations pertaining to weighing devices. A certificate of compliance shall be presented, prior to operation, to the Engineer for approval and shall be renewed whenever required by the Engineer at no cost to the Agency.

All scales shall be arranged so they may be read easily from the operator's platform or area. They shall indicate the true net weight without the application of any factor. The figures of the scales shall be clearly legible. Scales shall be accurate to within 1 percent when tested with the plant shut down. Weighing equipment shall be so insulated against vibration or moving of other operating equipment in the plant area that the error in weighing with the entire plant running will not exceed 2 percent for any setting nor 1.5 percent for any batch.

4-1.8 Calibration of Testing Equipment. Testing equipment, such as, but not limited to, pressure gages, metering devices, hydraulic systems, force (load) measuring instruments, and strain-measuring devices shall be calibrated by a testing agency acceptable to the Engineer at intervals not to exceed 12 months and following repairs, modification, or relocation of the equipment. Calibration certificates shall be provided when requested by the Engineer.

SECTION 5 - UTILITIES

5-1 LOCATION. The Permittee (in the case of Private Contracts) and the Agency (in the case of Cash or Assessment Act Contracts), will search known substructure records and furnish the Contractor with copies of documents which describe the location of utility substructures, or will indicate on the Plans for the project those substructures (except for service connections) which may affect the Work. Information regarding removal, relocation, abandonment, or installation of new utilities will be furnished to prospective bidders.

Where underground main distribution conduits such as water, gas, sewer, electric power, telephone, or cable television are shown on the Plans, the Contractor shall assume that every property parcel will be served by a service connection for each type of utility.

As provided in Section 4216 of the California Government Code, at least 2 working days prior to commencing any excavation, the Contractor shall contact the regional notification center (Underground Service Alert of Southern California) and obtain an inquiry identification number.

The California Department of Transportation is not required by Section 4216 to become a member of the regional notification center. The Contractor shall contact it for location of its subsurface installations.

The Contractor shall determine the location and depth of all utilities, including service connections, which have been marked by the respective owners and which may affect or be affected by its operations. If no pay item is provided in the Contract for this work, full compensation for such work shall be considered as included in the prices bid for other items of work.

5-2 PROTECTION. The Contractor shall not interrupt the service function or disturb the support of any utility without authority from the owner or order from the Agency. All valves, switches, vaults, and meters shall be maintained readily accessible for emergency shutoff.

Where protection is required to ensure support of utilities located as shown on the Plans or in accordance with 5-1, the Contractor shall, unless otherwise provided, furnish and place the necessary protection at its expense.

Upon learning of the existence and location of any utility omitted from or shown incorrectly on the Plans, the Contractor shall immediately notify the Engineer in writing. When authorized by the Engineer, support or protection of the utility will be paid for as provided in 3-2.2.3 or 3-3.

The Contractor shall immediately notify the Engineer and the utility owner if any utility is disturbed or damaged. The Contractor shall bear the costs of repair or replacement of any utility damaged if located as noted in 5-1.

When placing concrete around or contiguous to any non-metallic utility installation, the Contractor shall at its expense:

1. Furnish and install a 50 mm (2 inch) cushion of expansion joint material or other similar resilient material; or
2. Provide a sleeve or other opening which will result in a 50 mm (2 inch) minimum-clear annular space between the concrete and the utility; or
3. Provide other acceptable means to prevent embedment in or bonding to the concrete.

Where concrete is used for backfill or for structures which would result in embedment, or partial embedment, of a metallic utility installation; or where the coating, bedding or other cathodic protection system is exposed or damaged by the Contractor's operations, the Contractor shall notify the Engineer and arrange to secure the advice of the affected utility owner regarding the procedures required to maintain or restore the integrity of the system.

5-3 REMOVAL. Unless otherwise specified, the Contractor shall remove all interfering portions of utilities shown on the Plans or indicated in the Bid documents as "abandoned" or "to be abandoned in place". Before starting removal operations, the Contractor shall ascertain from the Agency whether the abandonment is complete, and the costs involved in the removal and disposal shall be included in the Bid for the items of work necessitating such removals.

5-4 RELOCATION. When feasible, the owners responsible for utilities within the area affected by the Work will complete their necessary installations, relocations, repairs, or replacements before commencement of work by the Contractor. When the Plans or Specifications indicate that a utility installation is to be relocated, altered, or constructed by others, the Agency will conduct all negotiations with the owners and work will be done at no cost to the Contractor, except as provided in 301-1.6. Utilities which are relocated in order to avoid interference shall be protected in their position and the cost of such protection shall be included in the Bid for the items of work necessitating such relocation.

After award of the Contract, portions of utilities which are found to interfere with the Work will be relocated, altered or reconstructed by the owners, or the Engineer may order changes in the Work to avoid interference. Such changes will be paid for in accordance with 3-2.

When the Plans or Specifications provide for the Contractor to alter, relocate, or reconstruct a utility, all costs for such work shall be included in the Bid for the items of work necessitating such work. Temporary or permanent relocation or alteration of utilities requested by the Contractor for its convenience shall be its responsibility and it shall make all arrangements and bear all costs.

The utility owner will relocate service connections as necessary within the limits of the Work or within temporary construction or slope easements. When directed by the Engineer, the Contractor shall arrange for the relocation of service connections as necessary between the meter and property line, or between a meter and the limits of temporary construction or slope easements. The relocation of such service connections will be paid for in accordance with provisions of 3-3. Payment will include the restoration of all existing improvements which may be affected thereby. The Contractor may agree with the owner of any utility to disconnect and reconnect interfering service connections. The Agency will not be involved in any such agreement.

5-5 DELAYS. The Contractor shall notify the Engineer of its construction schedule insofar as it affects the protection, removal, or relocation of utilities. Said notification shall be included as a part of the construction schedule required in 6-1. The Contractor shall notify the Engineer in writing of any subsequent changes in the construction schedule which will affect the time available for protection, removal, or relocation of utilities.

The Contractor will not be entitled to damages or additional payment for delays attributable to utility relocations or alterations if correctly located, noted, and completed in accordance with 5-1.

The Contractor may be given an extension of time for unforeseen delays attributable to unreasonably protracted interference by utilities in performing work correctly shown on the Plans.

The Agency will assume responsibility for the timely removal, relocation, or protection of existing main or trunkline utility facilities within the area affected by the Work if such utilities are not identified in the Contract Documents. The Contractor will not be assessed liquidated damages for any delay caused by failure of Agency to provide for the timely removal, relocation, or protection of such existing facilities.

If the Contractor sustains loss due to delays attributable to interferences, relocations, or alterations not covered by 5-1, which could not have been avoided by the judicious handling of forces, equipment, or plant, there shall be paid to the Contractor such amount as the Engineer may find to be fair and reasonable compensation for such part of the Contractor's actual loss as was unavoidable and the Contractor may be granted an extension of time.

5-5.1 Cooperation During Utility Relocation. When utilities are to be relocated during construction, the Contractor shall cooperate and coordinate with the respective utility owners so they may relocate their facilities to clear the Work. Delays in relocation of utilities which result from failure to cooperate and coordinate will not be a cause for an extension of time or Non-Working Days.

5-6 COOPERATION. When necessary, the Contractor shall so conduct its operations as to permit access to the Work site and provide time for utility work to be accomplished during the progress of the Work.

SECTION 6 - PROSECUTION, PROGRESS AND ACCEPTANCE OF WORK

6-1 CONSTRUCTION SCHEDULE AND COMMENCEMENT OF WORK. The requirements of this section concerning submission of construction schedules shall not apply to projects where the time allowed to complete the Work is less than 25 Working Days or the total Contract Price bid is less than $75,000 unless required by the special provisions.

The Contractor shall submit a construction schedule concurrently with the submittal of signed Contract, Contract bonds, and certificate of insurance. The Notice to Proceed will be delayed until the schedule is received. See 6-7.4, Starting of Contract Time.

When required by the Special Provisions, a revised schedule shall be submitted monthly prior to each progress payment closure date. Processing of the progress payment will be delayed until such revised schedule complying with this section is received.

The construction schedule shall be in the form of a Construction Element vs. Time Chart as shown in Appendix B-1and a Work Complete vs. Time Chart as shown in Appendix B-2.

The B-1 Chart shall be in sufficient detail to show the chronological relationship of all activities of the project including, but not limited to, estimated starting and completion dates of various activities, submittal of shop drawings to the Engineer for approval, procurement of materials, and scheduling of equipment. The B-1 Chart shall recognize the requirements of 5-5. The B-1 Chart shall reflect obtaining all materials and completing all Work under the Contract within the specified time and in accordance with these Specifications. If the Contractor intends to complete the Work prior to the time for completion, the intended date of completion shall be set forth in the B-1 Chart and the Contractor shall execute a Contract Change Order that changes the number of Working Days allowed for completion to conform with such intended completion date. The Change Order shall not change the Contract Price.

The Contractor may submit a computer generated schedule in lieu of the form in Appendix B-1 and B-2, provided all of the elements shown on that form or specified herein are included.

An updated construction schedule shall be submitted prior to the next progress payment closure date whenever the actual percent Work complete versus percent time elapsed curve falls below and to the right of the dotted line shown on Appendix B-2.

If the Contractor desires to make a major change in its method of operations after commencing construction, or if its schedule fails to reflect the actual progress, it shall submit to the Agency a revised construction schedule in advance of beginning revised operations.

Revised and updated schedules shall show actual completion to the date of the revision in the lower segmented bar for each item.

The construction schedule shall be prepared as follows (see examples in Appendices C-1 and C-2):

1. On theB-1 Chart:
   - a Enter the project name and Specification No. as shown on the notice inviting bids and the Contractors name.
   - b. List the items of Work either individually or combined where items are part of the same element of the Work.
   - c. Assign a value for each horizontal space plotting interval in Working Days as follows: 1 working day for total Contract time of less than 100 working days, 2 for 100 to 200 working days and 5 for longer projects. Enter the value used in the space provided in the lower part of the form.
   - d. At the end of performance time and draw a vertical line and label it "End Performance Time". Enter numbers at 10 times the plotting interval at the top of intermediate vertical lines.
   - e. Shade in a bar in the upper segmented section for each work item to indicate the period during which Work will be performed. Move-in time and delivery time for materials shall be shown if significant to the schedule.

2. On the B-2 Chart:
   a. Enter the project name and Specification No. as shown on the notice inviting bids.
   b. At time intervals of 10 or 20 working days:
      (1) Compute the cumulative dollar value of Work which is expected to be completed for each item of Work, including the value of the completed portion of lump-sum items.
      (2) Divide the values computed in "b(1)" by the Total Contract Price to determine the percentage of the entire Contract planned for completion at the end of each time interval.
      (3) Divide the days of performance time at the end of each time interval by the total Contract performance time to obtain the percentage of elapsed performance time.
   c. Plot each percentage of completion value figure computed in "b(2)" against the corresponding percentage of completion time computed in "b(3)" using scales on the bottom and left side of chart.
   d. Connect points plotted in "c" with a line which will show the planned progress for the entire job.

If the proposed percent Work complete versus percent time elapsed line falls below and to the right of the dotted line drawn on the B-2 Chart, the Contractor shall provide sufficient information and backup to show that the Work can be completed on time.

6-1.1 Beginning of Work. The issuance of Notice to Proceed by Agency shall constitute the Contractor's authority to enter upon the site of the Work and to begin operations provided it has also notified Engineer at least 24 hours in advance. Entry upon the site without authority will be treated as trespassing.

6-1.2 Starting Work. The Contractor may start work at any time after the Notice to Proceed is issued but work shall begin within 15 Days after the starting date for the Contract, or at such other time as may be indicated in the Special Provisions. The actual date on which the Contractor starts work will not affect the required time for completion as provided for in 6-7 and 6-7.1.

6-1.3 Work Sequence. If required by the Special Provisions, the Contractor shall start construction operations on that part of the Work designated by the Engineer.

6-1.4 Resources Required. The Work shall be conducted in such a manner and with sufficient materials, equipment, and labor to insure its completion in accordance with the Plans and Specifications within the time set forth in the Contract.

6-2 PROSECUTION OF WORK. To minimize public inconvenience and possible hazard and to restore streets and other Work areas to their original condition and former state of usefulness as soon as practicable, the Contractor shall diligently prosecute the Work to completion. If, in the Engineer's opinion, the Contractor fails to prosecute the Work to the extent that the above purposes are not being accomplished, the Contractor shall, upon orders from the Engineer, immediately take the steps necessary to fully accomplish said purposes. All costs of prosecuting the Work as described herein shall be absorbed in the Contractor's bid. Should the Contractor fail to take the necessary steps to fully accomplish said purposes, after orders of the Engineer to do so, the Engineer may suspend the Work in whole or in part, until the Contractor takes said steps.

As soon as possible under the provisions of these Specifications, the Contractor shall backfill all excavations and restore to usefulness all improvements existing prior to the start of the Work.

If Work is suspended through no fault of the Agency, all expenses and losses incurred by the Contractor during such suspensions shall be borne by the Contractor. If the Contractor fails to properly provide for public safety, traffic, and protection of the Work during periods of suspension, the Agency may elect to do so, and deduct the cost thereof from monies due the Contractor. Such action will not relieve the Contractor from liability.

6-3 SUSPENSION OF WORK

6-3.1 General. The Work may be suspended in whole or in part when determined by the Engineer that the suspension is necessary in the interest of the Agency. The Contractor shall comply immediately with any written order of the Engineer. Such suspension shall be without liability to the Contractor on the part of the Agency except as otherwise specified in 6-6.3.

6-3.2 Archaeological and Paleontological Discoveries. If discovery is made of items of archaeological or paleontological interest, the Contractor shall immediately cease excavation in the area of discovery and shall not continue until ordered by the Engineer. When resumed, excavation operations within the area of discovery shall be as directed by the Engineer.

Discoveries which may be encountered may include, but not be limited to, dwelling sites, stone implements or other artifacts, animal bones, human bones and fossils.

The Contractor shall be entitled to an extension of time and compensation in accordance with the provisions of 6-6.

6-3.3 Temporary Suspension of Work. Should suspension of Work be ordered by reason of the failure of the Contractor to carry out orders or to perform any provisions of the Contract; or by reason of weather conditions being unsuitable for performing any item or items of Work; the Contractor, at its expense, shall do all the work necessary to provide a safe, smooth, and unobstructed passageway through construction for use by public traffic during the period of such suspension. In the event that the Contractor fails to perform the work above specified, the Agency may perform such work and the cost thereof will be deducted from monies due or to become due the Contractor.

If the Engineer orders a suspension of all of the Work, or a portion of the Work which is the current controlling operation or operations, due to unsuitable weather or to such other conditions as are considered unfavorable to the suitable prosecution of the Work, the days on which the suspension is in effect shall not be considered Working Days.

If a portion of Work at the time of such suspension is not a current controlling operation or operations, but subsequently does become the current controlling operation or operations, the determination of Working Days will be made on the basis of the then current controlling operation or operations.

If a suspension of Work is ordered by the Engineer due to the failure on the part of the Contractor to carry out orders given or to perform any provision of the Contract, the Days on which the suspension order is in effect shall be considered Working Days if such days are Working Days as defined.

6-4 TERMINATION OF THE CONTRACT FOR DEFAULT..

6.4.1 General. If, prior to the acceptance of the Work, the Contractor:

a) becomes insolvent, assigns its assets for the benefit of its creditors, is unable to pay its debts as they become due, or is otherwise financially unable to complete the Work,

b) abandons the Work by failing to report to the Work site and diligently prosecute the Work to completion,

c) disregards written instructions from the Agency or materially violates provisions of the Contract Documents,

d) fails to prosecute the Work according to the schedule approved by the Engineer,

e) disregards laws or regulations of any public body having jurisdiction, or

f) commits continuous or repeated violations of regulatory or statutory safety requirements, then the Agency will consider the Contractor in default of the Contract.

Notices, and other written communications regarding default between the Contractor, the Agency, and the Surety shall be transmitted in accordance with 2-12.

6-4.2 Notice to Cure. The Agency will issue a written notice to cure the default to the Contractor and its Surety. The Contractor shall commence satisfactory corrective actions within 5 Working Days after receipt.

6-4.3 Notice of Termination for Default. If the Contractor fails to commence satisfactory corrective action within 5 Working Days after receipt of the notice to cure, or to diligently continue satisfactory and timely correction of the default thereafter, then the Agency will consider the Contractor in default of the Contract and:

a) will terminate the Contractor's right to perform under the Contract by issuing a written notice of termination for default to the Contractor and its Surety,

b) may use any materials, equipment, tools or other facilities furnished by the Contractor to secure and maintain the Work site, and

c) may furnish labor, equipment, and materials the Agency deems necessary to secure and maintain the Work site. The provisions of this subsection shall be in addition to all other legal rights and remedies available to the Agency.

6-4.4 Responsibilities of the Surety. Upon receipt of the written notice of termination for default, the Surety shall immediately assume all rights, obligations and liabilities of the Contractor under the Contract. If the Surety fails to protect and maintain the Work site, the Agency may do so, and may recover all costs incurred. The Surety shall notify the Agency that it is assuming all rights, obligations and liabilities of the Contractor under the Contract and all money that is due, or would become due, to the Contractor shall be payable to the Surety as the Work progresses, subject to the terms of the Contract.

Within 15 Working Days of receipt of the written notice of termination for default, the Surety shall submit to the Agency a written plan detailing the course of action it intends to take to remedy the default. The Agency will review the plan and notify the Surety if the plan is satisfactory. If the Surety fails to submit a satisfactory plan, or if the Surety fails to maintain progress according to the plan accepted by the Agency, the Agency may, upon 48 hours written notice, exclude the Surety from the premises, take possession of all material and equipment, and complete the Work in any way the Agency deems to be expedient. The cost of completing the Work by the Agency shall be charged against the Surety and may be deducted from any monies due, or which would become due, the Surety. If the amounts due under the Contract are insufficient for completion, the Surety shall pay to the Agency, within 30 days after the Agency submits an invoice, all costs in excess of the remaining Contract Price.

6-4.5 Payment. The Surety will be paid for completion of the Work in accordance with 9-3 less the value of damages caused to the Agency by acts of the Contractor.

6-5 TERMINATION OF CONTRACT. The Board may terminate the Contract at its own discretion or when conditions encountered during the Work make it impossible or impracticable to proceed, or when the Agency is prevented from proceeding with the Contract by act of God, by law, or by official action of a public authority.

The Agency will issue a written notice of termination for convenience in accordance with 2-12. Upon receipt, the Contractor shall immediately cease work, except work the Contractor is directed to complete by the Engineer or required to complete for public safety and convenience. The Contractor shall immediately notify Subcontractors and suppliers to immediately cease their work.

The Contractor will be paid without duplication for:

a) work completed in accordance with the Contract Documents prior to the effective date of termination for convenience;

b) reasonable costs incurred in settlement of terminated contracts with Subcontractors, suppliers and others; and

c) reasonable expenses directly attributable to termination.

The Contractor shall submit a final termination settlement proposal to the Agency no later than 90 days from the effective date of termination, unless extended, in writing, by the Agency upon written request by the Contractor.

If the Contractor fails to submit a proposal, the Agency may determine the amount, if any, due the Contractor as a result of the termination. The Agency will pay the Contractor the amount it determines to be reasonable. If the Contractor disagrees with the amount determined by the Agency as being reasonable, the Contractor shall provide notice to the Agency within 30 days of receipt of payment. Any amount due shall be as later determined by arbitration, if the Agency and the Contractor agree thereto, or as fixed in a court of law.

6-6 DELAYS AND EXTENSIONS OF TIME

6-6.1 General. If delays are caused by unforeseen events beyond the control of the Contractor, such delays will entitle the Contractor to an extension of time as provided herein, but the Contractor will not be entitled to damages or additional payment due to such delays, except as provided in 6-6.3. Such unforeseen events may include war, government regulations, labor disputes, strikes, fires, floods, adverse weather necessitating cessation of work, other similar action of the elements, inability to obtain materials, equipment or labor, required Extra Work, or other specific events as may be further described in the Specifications.

No extension of time will be granted for a delay caused by the Contractor's inability to obtain materials unless the Contractor furnishes to the Engineer documentary proof of the inability to obtain such materials in a timely manner in accordance with the sequence of the Contractor's operations and the approved construction schedule.

If delays beyond the Contractor's control are caused by events other than those mentioned above, but substantially equal in gravity to those enumerated, and an extension of time is deemed by the Engineer to be in the best interests of the Agency, an extension of time may be granted, but the Contractor will not be entitled to damages or additional payment due to such delays, except as provided in 6-6.3.

If delays beyond the Contractor's control are caused solely by action or inaction by the Agency, such delays will entitle the Contractor to an extension of time as provided in 6-6.2.

6-6.2 Extensions of Time. Extensions of time, when granted, will be based upon the effect of delays to the Work as a whole and will not be granted for noncontrolling delays to minor included portions of Work unless it can be shown that such delays did, in fact, delay the progress of the Work as a whole.

6-6.3 Payment for Delays to Contractor. The Contractor will be compensated for damages incurred due to delays for which the Agency is responsible if such delays are unreasonable in the circumstances involved and were not within the contemplation of the parties when the Contract was awarded to the Contractor and delay the Work as a whole. Such actual costs will be determined by the Engineer. The Agency will not be liable for, and in making this determination the Engineer will exclude, all damages which the Engineer determines the Contractor could have avoided by any reasonable means including, without limitation, the judicious handling of forces, equipment, or plant.

6-6.4 Written Notice and Report. If the Contractor desires payment for a delay as specified in 6-6.3 or an extension of time, it shall, within 30 Days after the beginning of the delay, file with the Agency a written request and report as to the cause and extent of the delay. The request for payment or extension must be made at least 15 Days before the specified completion date. Failure by the Contractor to file these items within the time specified will be considered grounds for refusal by the Agency to consider such request.

6-6.4.1 Documentation of Delays. When the Contractor requests an extension of time for delay due to inability to obtain materials or equipment, the documentary proof required by 6-6.1 shall include the following:

1. Date Engineer was notified of delay.
2. Date the delay began.
3. Exact description of material or equipment causing delay.
4. Documentation showing when and from whom ordered.
5. Documentation of promise to deliver.
6. Documentation of actual delivery date.
7. Description of how late delivery caused delay (include construction schedule).
8. Documentation of measures taken to get prompt delivery.
9. Documentation of attempts to get delivery from other sources.
10. Description of steps taken in project scheduling to minimize effects of late delivery.
11. Description of steps taken to get project back on schedule after actual delivery.
12. Statement of actual time lost as a result of late delivery.

6-7 TIME OF COMPLETION

6-7.1 General. The Contractor shall complete the Work within the time set forth in the Contract. The Contractor shall complete each portion of the Work within such time as set forth in the Contract for such portion. Unless otherwise specified, the time of completion of the Contract shall be expressed in Working Day

6-7.2 Working Day. A Working Day is any day within the period between the start of the Contract time as defined in 6-1 and the date provided in the Contract for completion or upon field acceptance by the Engineer of all Work provided for in the Contract, whichever occurs first, other than:

(1) Saturday,
(2) Sunday,
(3) any day designated as a holiday by the Agency,
(4) any other day designated as a holiday in a Master Labor Agreement entered into by the Contractor or on behalf of the Contractor as an eligible member of a Contractor Association,
(5) any day the Contractor is prevented from working at the beginning of the workday for cause as defined in 6-6.1,
(6) any day the Contractor is prevented from working during the first 5 hours of the workday with at least 60 percent of the normal work force for cause as defined in 6-6.1.

6-7.2.1 Holidays. Solely for the purposes of paragraph (3) of 6-7.2, the following days are designated as holidays by the Agency.

MONTH	A AGENCY EMPLOYEE HOLIDAYS	B OTHER DESIGNATED HOLIDAYS
January	1st day; 3rd Monday	None
February	3rd Monday	12th day
March	None	31st day
March-April	None	One Friday between March 21 and April 23 designated as Good Friday
May	Last Monday	None
June	None	None
July	4th day	None
August	None	None
September	1st Monday	9th day
October	None	2nd Monday
November	11th day; 4th Thursday	the Friday following the 4th Thursday
December	25th	23rd day, only if Thursday or Friday; 24th day; 31st day

If any day listed above falls on Saturday, the preceding Friday is the holiday. If any day listed above falls on Sunday, the succeeding Monday is the holiday.

No extra holiday shall result when such Friday or Monday is already designated as a holiday.
A copy of a Working Day calendar incorporating the above-listed holidays and used by the Agency for Contract time accounting purpose will be furnished to the Contractor upon request.

The term "holiday" as used in this section shall not be construed as being the same as "holiday" within the meaning of 7-2.2.

The Contractor may perform work on the holidays designated in Column A above provided it has obtained prior written approval of the Engineer at least two Days in advance of performing the work. The Contractor may perform work on the holidays designated in Column B above provided the Contractor notifies the Engineer two Days in advance of the holiday.

6-7.2.2 Landscape Maintenance Period. Where a landscape maintenance period is specified, the portion of the time in such period that follows the completion of all other Work required by the Contract shall not be Working Days for Contract time accounting.

6-7.3 Contract Time Accounting. The Engineer will make a daily determination of each Working Day to be charged against the Contract time. These determinations will be discussed and the Contractor will be furnished a periodic statement showing the allowable number of Working Days of Contract time, as adjusted, at the beginning of the reporting period. The statement will also indicate the number of Working Days charged during the reporting period and the number of Working Days of Contract time remaining. If the Contractor does not agree with the statement, the Contractor must file a written protest within 15 Days after receipt, setting forth the facts of the protest. Otherwise, the statement will be deemed to have been accepted.

6-7.4 Starting Date for Contract Time and Notice to Proceed. The starting date for Contract time accounting will be determined by adding the number of Days indicated on the Proposal form to the date the Contract is awarded, however the Agency may, at its option, delay the starting date by not more than 60 calendar Days if necessary to obtain permits, rights-of-way, or approval of federal or State authorities, or when prevented from starting the project due to causes beyond its control. Notice to Proceed will be issued within 7 calendar Days after the Contract, bonds, certificates of insurance and other documents have been returned, properly completed by the Contractor, unless the starting date is delayed as herein provided. If the Agency delays the Contract starting date, Notice to Proceed will be issued at least 7 calendar Days prior to the new starting date. Any delay caused by failure of the Contractor to properly complete or timely return the Contract Documents shall not change the Contract starting date and shall not be a cause for extending the Contract time. The Notice of Award will indicate a probable Contract starting date. The Notice to Proceed will indicate the actual Contract starting date, computed as herein described.

6-8 COMPLETION, ACCEPTANCE AND WARRANTY.

6-8.1 Completion and Acceptance. Acknowledgment of completion of the Work will occur prior to Acceptance by the Agency. Acceptance will only occur after all Contract requirements have been fulfilled, such as training, submission of warranties, maintenance manuals, record drawings, Release on Contract and the like. Acceptance by the Agency will occur when the Engineer signs the Notice of Completion.
The Work will be inspected by the Engineer promptly upon receipt of the Contractor's written assertion that the Work has been completed. If, in the Engineer's judgment, the Work has been completed in accordance with the Plans and Specifications, the Engineer will acknowledge completion of the Work. Completion of the Work, as used above, shall include the Contractor showing evidence of having received an occupancy clearance from Building and Safety, or other permit issuing agency, when a building, plumbing electrical, grading, or other permit is required for the Work. The Engineer will, in acknowledging completion of the Work, set forth in writing the date when the Work was completed. This will be the date when the Contractor is relieved from responsibility to protect the Work. This will also be the date to which liquidated damages will be computed.

6-8.2 Warranty and Correction

6-8.2.1 Warranty The Contractor warrants to the Agency that materials and equipment furnished under the Contract will be new, unless otherwise specified in the Contract Documents, and of good quality, that the Work will be free from defects in materials and workmanship and that the Work will conform to the requirements of the Contract Documents. Work not conforming to these requirements, including substitutions not properly approved and authorized, may be considered defective by the Agency. This warranty excludes damage or defect caused by abuse (other than by the Contractor or those under the control of the Contractor), modifications not executed by the Contractor, or improper or insufficient maintenance. This warranty excludes normal wear and tear. Nothing in this warranty is intended to limit any manufacturer's warranty which provides the Agency with greater warranty rights.

6-8.2.2 Correction Period For a period of one (1) year from the date of acceptance of the Work by the Agency, the Contractor shall repair or replace any defective workmanship or materials or Work not in conformance with the Contract Documents after notice to do so from the Engineer, and within the time specified in the notice. If the Contractor fails to make such repair or replacement within the time specified in the notice, the Agency may perform the repair or replacement and the Contractor and the Contractor's sureties shall be liable for the cost thereof. The one (1) year period referenced in this section 6-8.2.2 applies only to the Contractor's obligation to repair or replace defective workmanship or materials or Work not in conformance with the Contract Documents and is not intended to constitute a period of limitations for any other rights or remedies the Agency may have regarding the Contractor's other obligations under the Contract Documents.

6-8.3 No Waiver of Legal Rights. The Agency shall not be precluded or estopped by any measurement, estimate, or certificate made either before or after the completion and Acceptance of the Work and payment therefor from showing the true amount and character of the Work performed and materials furnished by the Contractor, nor from showing that any such measurement, estimate, or certificate is untrue or is incorrectly made, nor that the Work or materials do not in fact conform to the Contract.

The Agency shall not be precluded or estopped, notwithstanding any such measurement, estimate, or certificate and payment in accordance therewith, from recovering from the Contractor or its sureties, or both, such damages as it may sustain by reason of the Contractor's failure to comply with the terms of the Contract.

Neither the Acceptance by the Engineer or by its representative, nor any payment for or Acceptance of the whole or any part of the Work, nor any extension of time, nor any possession taken by the Engineer shall operate as a waiver of any portion of the Contract or of any power herein reserved, or of any right to damages.

A waiver of any breach of the Contract shall not be held to be a waiver of any other or subsequent breach.

6-8.4 Landscape Maintenance Period. Final Acceptance of the Contract shall follow the satisfactory completion of all Contract Work, including the landscape maintenance period if one is specified.

6-8.5 Non-complying Work. Neither the final certificate of payment nor any provision in the Contract Documents, nor partial or entire occupancy of the premises by the Agency, shall constitute an Acceptance of Work not done in accordance with the Contract Documents or relieve the Contractor of liability in respect to any express warranties or responsibility for faulty materials or workmanship.

6-8.6 Written Warranties. The Contractor shall obtain and deliver to the Engineer all written warranties required to be furnished by the Specifications. Each of such warranty shall be underwritten by the Contractor for the full period prescribed therein, and shall bear its endorsement to such effect.

6-9 LIQUIDATED DAMAGES. Failure of the Contractor to complete the Work within the time allowed will result in damages being sustained by the Agency. Such damages are, and will continue to be, impracticable and extremely difficult to determine. For each consecutive calendar day in excess of the time specified, as adjusted in accordance with 6-6, for completion of the Work the Contractor shall pay to the Agency, or have withheld from monies due it, the sum of $250, unless otherwise provided in the Contract Documents.

Execution of the Contract under these Specifications shall constitute agreement by the Agency and Contractor that $250 per day is the minimum value of the costs and actual damage caused by failure of the Contractor to complete the Work within the allotted time, that such sum is liquidated damages and shall not be construed as a penalty, and that such sum may be deducted from payments due the Contractor if such delay occurs.

6-10 USE OF IMPROVEMENT DURING CONSTRUCTION. The Agency reserves the right to take over and utilize all or part of any completed facility or appurtenance. The Contractor will be notified in writing in advance of such action. Such action by the Agency will relieve the Contractor of responsibility for injury or damage to said completed portions of the improvement resulting from use by public traffic or from the action of the elements or from any other cause, except injury or damage resulting from the Contractor's operations or negligence. The Contractor will not be required to reclean such portions of the improvement before field completion, except for cleanup made necessary by its operations. Nothing in this section shall be construed as relieving the Contractor from full responsibility for correcting defective work or materials.

In the event the Agency exercises its right to place into service and utilize all or part of any completed facility or appurtenance, the Agency shall assume the responsibility and liability for injury to persons or property arising out of or resulting from the utilization of the facility or appurtenance so placed into service, except for any willful or negligent act or omission by the Contractor, Subcontractor, their officers, employees or agents.

6-10.1 Use of Improvements - Exceptions. The provisions of 6-10 shall not apply to projects for the repair, modification, enlargement or improvement of existing facilities that are to remain in use during construction except where a portion of the project which is completely independent from the rest of the Work can be completed and put into use by the Agency.

On projects on public roads, after satisfactory completion of an isolated section of the Work involving roadway improvements or repairs, when all temporary signs and other temporary Contractor facilities have been removed, the section is not being used as a detour, the section is no longer under the Contractor's control, and the section is opened to public traffic through the end of the Contract period, that section of the Work shall be taken over by the Agency as provided in 6-10. The Contractor shall indicate to the Engineer in writing when the conditions of this paragraph have been complied with and shall specify the limits of the section involved. Any taking over of the Work by the Agency shall be effective only when formal written notification is issued by the Agency.

6-11 NOTICE OF POTENTIAL CLAIM FOR ADDITIONAL COMPENSATION. Procedures for notice of claims in specific situations and circumstances are provided in the following sections:

3-4 ....Changed Conditions
6-6.4 ....Delay and Extensions of Time
6-7.3 ....Contract Time Accounting

Compliance with this section is not prerequisite to assertion of a claim involving those sections or based on differences in measurements or errors of computation as to Contract quantities.

Compliance with the provisions of this section is required in all other situations and circumstances.

It is the intention of this section that differences arising between the parties under and by virtue of the Contract be brought to the attention of the Engineer at the earliest possible time in order that such matters may be settled, if possible, or other appropriate action taken to resolve such differences.

The Contractor shall give the Engineer written notice of a potential claim, setting forth: (1) the reasons for which the Contractor believes additional compensation will or may be due; (2) the nature of the costs involved; and (3) insofar as possible, the amount of the potential claim.

If the claim is based upon an act or failure to act by the Engineer, the said notice must be given to the Engineer prior to the date when the work giving rise to the potential claim is commenced; in all other cases the said notice must be given to the Engineer within 15 Days after the happening of the event, thing or occurrence giving rise to the potential claim.

The Contractor shall not be entitled to the payment of any additional compensation where the written notice of potential claim has not been given to the Engineer in the manner required by and within the time limitations of this section.

6-12 DISPUTES AND CLAIMS; PROCEDURE.

6-12.1 GENERAL. Any and all decisions made on appeal pursuant to this section shall be in writing. Any "decision" purportedly made pursuant to this section which is not in writing shall not be binding upon the Agency and should not be relied upon by the Contractor.

Filing or giving the notices required under 3-4, 6-6.4, 6-7.3 and 6-11 is prerequisite to recovery under a Contractor's claim for additional compensation; nothing in this section shall excuse the Contractor from its duty to file or give the required notices, or from performing other duties required by the Contract Documents.

6-12.2 ADMINISTRATIVE REVIEW. Prior to proceeding under 6-12.3 or filing a Complaint in Arbitration, the Contractor shall exhaust its administrative remedies by submitting its claim for review and decision by the following Agency staff in the following sequence:

Project Manager, responsible for the project
Department Director (Public Works Agency), responsible for the project.
Director of the Public Works Agency (the Engineer)

If the Contractor disputes the Project Manager's decision on its claim, the Contractor shall submit the claim to the Department Director. If the Contractor disputes the Department Director's decision on its claim, the Contractor shall submit the claim to the Engineer. Agency staff decisions shall state the portion of the claim that is undisputed if any.

The Project Manager may elect to forward a claim submitted by the Contractor directly to the Department Director. The Project Manager must give the Contractor notice of that election and the Contractor may supplement its claim within 7 Days of such notice (unless the parties agree in writing to a different time) and its claim will be deemed submitted on the earlier of the day it supplements its claim, the day it states in writing that it will not supplement its claim or the day time to supplement expires. The Department Director may forward a claim timely submitted by the Contractor directly to the Engineer instead of making a decision on the claim, in which case no notice or opportunity to supplement the claim is required, and the claim shall be deemed timely submitted to the Engineer.

The Engineer's decision on the claim shall be the Agency's final decision.

Claims submitted to the Department Director and the Engineer shall be submitted in writing and shall include:

a. A copy of the disputed decision.
b. A statement as to why the Contractor believes the decision is in error.
c. All information, argument, documents and evidence (collectively, materials) that the Contractor wishes to have considered in the review. Where the request for review is made to the Engineer, in lieu of resubmitting materials which have already been submitted to the Department Director, the Contractor may include with the request a list of the materials the Contractor wants the Engineer to consider. Any additional materials and evidence not previously submitted to the Department Director shall be included with the request to the Engineer, if the Contractor wishes them to be considered. If relevant evidence is not available at the time the request is made to the Department Director or the Engineer, the Contractor shall identify such evidence and include a statement as to when such evidence will be submitted.

The Project Manager shall issue a decision on a claim within 10 Days of receipt; if the Project Manager does not do so, then the Project manager will be deemed to have decided to reject the claim in its entirety as of the conclusion of the 10th Day after receipt. The Contractor shall submit a claim to the Department Director for review and decision within 7 Days of receipt of the Project Manager's decision or of the time the Project Manager is deemed to have decided to reject the claim, whichever is applicable. The Department Director shall issue a decision on a claim within 10 Days of the timely submission of the claim; if the Department Director does not do so, then the Department Director will be deemed to have decided to reject the claim in its entirety as of the conclusion of the 10th Day after timely submission. The Contractor shall submit a claim to the Engineer for review and decision within 7 Days of receipt of the Department Director's decision or of the time the Department Director is deemed to have decided to reject the claim, whichever is applicable. If a claim is timely submitted to the Engineer and the Engineer fails to issue a decision on that claim within the time limits prescribed for issuing a written statement under Public Contract Code, section 9204, subdivision (d)(1), the Engineer shall be deemed to have decided to reject the claim in its entirety. At any time after the Project Manager receives a claim, the Agency and Contractor may agree in writing to different time limits than those set forth in this paragraph.

6-12.3 MEET AND CONFER; MEDIATION If the Contractor disputes the Agency's final decision, the Contractor may demand in writing an informal conference to meet and confer for settlement of the issues in dispute. Upon receipt of a demand in writing sent by registered mail or certified mail, return receipt requested, the Agency shall schedule a meet and confer conference within 30 Days for settlement of the dispute.

Within 10 business days following the conclusion of the meet and confer conference, if the claim or any portion of the claim remains in dispute, the Agency shall provide the Contractor a written statement identifying the portion of the claim that remains in dispute and the portion that is undisputed. Any payment due on an undisputed portion of the claim shall be processed and made within 60 Days after the Agency issues its written statement. Any disputed portion of the claim, as identified by the Contractor in writing, shall be submitted to nonbinding mediation, with the Agency and the Contractor sharing the associated costs equally. The Agency

and Contractor shall agree to a mediator within 10 business days after the disputed portion of the claim has been identified in writing. If the Agency and Contractor cannot agree upon a mediator, each party shall select a mediator and those mediators shall select a qualified neutral third party to mediate with regard to the disputed portion of the claim. Each party shall bear the fees and costs charged by its respective mediator in connection with the selection of the neutral mediator. If mediation is unsuccessful, the parts of the claim remaining in dispute shall be subject to applicable procedures outside this section.

For purposes of this section, mediation includes any nonbinding process, including, but not limited to, neutral evaluation or a dispute review board, in which an independent third party or board assists the parties in dispute resolution through negotiation or by issuance of an evaluation. Any mediation utilized shall conform to the timeframes in this section.

Failure by the Agency to meet the time requirements of this section shall result in the portion of the claim that remains in dispute being deemed rejected in its entirety.

The parties may agree to waive, in writing, mediation under this section.

6-12.4 ARBITRATION. Claims and disputes arising under or related to the performance of the Contract, for which mediation under 6-12.3 was waived or unsuccessful except for claims which have been released by execution of the "Release on Contract" as provided in 9-4, shall be resolved by arbitration unless the Agency and the Contractor agree in writing, after the claim or dispute has arisen, to waive arbitration and to have the claim or dispute litigated in a court of competent jurisdiction. Arbitration shall be pursuant to Article 7.1 (commencing with Section 10240) of Chapter 1 of Part 2 of the Public Contract Code and the regulations promulgated thereto, Chapter 4 (commencing with Section 1300) of Division 2 of Title 1 of the California Code of Regulations. The arbitration decision shall be decided under and in accordance with California law, supported by substantial evidence and, in writing, contain the basis for the decision, findings of fact, and conclusions of law.

Arbitration shall be initiated by a Complaint in Arbitration made in compliance with the requirements of said Chapter 4. A Complaint in Arbitration by the Contractor shall be filed not later than 90 calendar Days after receipt of the final written decision of the Agency on the claim or dispute or within 300 Days after Acceptance of the Work by the Agency if no written decision has been issued. For the purposes of this section, "Acceptance of the Work by the Agency" shall be defined as the date the Notice of Completion is filed.

Where an election is made by either party to use the Simplified Claims Procedure provided under Sections 1340-1346 of said Chapter 4, the parties may mutually agree to waive representation by counsel.

All contracts valued at more than $25,000 between the Contractor and its subcontractors and suppliers shall include a provision that the subcontractors and suppliers shall be bound to the Contractor to the same extent that the Contractor is bound to the Agency by all terms and provisions of the Contract, including this arbitration provision.

6-13 CONTRACTOR'S WORK HOURS

6-13.1 Working Hours Limitations. Except as otherwise specified, no work shall be performed by the Contractor at the Work site between the hours of 7:00 p.m. and 7:00 a.m. the following day, nor shall work be performed on Saturdays, Sundays or holidays listed in 6-7.2.1.

6-13.2 Regular Work Schedule. The Contractor shall furnish a work schedule with the Construction Schedule required by 6-1 and inform the Engineer at least two Days in advance of changing the schedule. The schedule shall include the times for starting and ending work on each day. Such starting and ending times shall not be more than 10 1/2 hours apart.

6-13.3 Exceptions. The limitations on working hours and days shall not apply to emergency work made necessary by unusual conditions where such work is necessary to protect the Work, to protect the property of others, to protect life, or to ensure the orderly flow of traffic.

The limitations of this section shall not apply where work at times other than allowed by 6-13.1 and 6-13.2 is necessary in order to make utility connections or is required by other provisions contained in these Specifications in order to perform the work in the manner specified. In these cases, the Contractor shall obtain prior written approval of the Engineer at least two Days in advance of performing the work.

SECTION 7 - RESPONSIBILITIES OF THE CONTRACTOR

7-1 THE CONTRACTOR'S EQUIPMENT AND FACILITIES.

7-1.1 General. The Contractor shall furnish and maintain in good condition all equipment and facilities as required for the proper execution and inspection of the Work.

The Contractor shall provide and maintain enclosed toilets for the use of employees engaged in the Work. These accommodations shall be maintained in a neat and sanitary condition, and regularly pumped out.

7-1.2 Temporary Utility Services. The Contractor shall, at its own expense, make all arrangements necessary for the provision of temporary utility services necessary for its own use during performance of the Work.

The Contractor shall not draw water from any fire hydrant (except to extinguish a fire), without obtaining permission from the water utility owner.

7-1.3 Crushing and Screening Operations. Unless otherwise specified in the Special Provisions, the establishment and operation of portable screens and crushers will not be allowed on or adjacent to the Work site.

7-2 LABOR

7-2.1 General. The Contractor, its agents, and employees shall be bound by and comply with applicable provisions of the Labor Code and Federal, State, and local laws related to labor.
Any worker found by the Engineer to be incompetent, intemperate, troublesome, disorderly, or otherwise objectionable, or who fails to perform the Work properly and acceptably, shall be immediately removed from the Work site by the Contractor and shall not be reemployed in the performance on the Work.

7-2.1.1 Special Qualifications. Where the Engineer determines certain portions of the Work require experience, training, certification or other special qualifications that may not be possessed by the average journeyperson, such portions of the Work will be specifically identified in the Special Provisions and the special qualifications identified.

When work requiring special qualifications is being performed, a person with such qualifications must be in immediate charge of the work. The person may be a lead journeyperson, foreperson or trade superintendent. The general superintendent or a foreperson who is not specifically assigned to the area where the identified work is being performed will not be considered to be in immediate charge of the work.

Written certification of the required qualifications shall be furnished to the Engineer at least one week prior to the time work is commenced on the work requiring such qualifications. Such certification is subject to review and acceptance by the Engineer. If, during performance of work requiring special qualifications, the qualified person becomes temporarily or permanently unavailable to the Contractor, work shall not proceed until a qualified replacement has been accepted by the Engineer. The Engineer will promptly consider the certification of the replacement.

If identified work is performed without a person having the special qualifications in charge, the Engineer may, at its sole discretion, order such work removed and replaced at the Contractor's expense.

If, after certification is accepted, the Engineer finds that the certification was inaccurate, or work on the project indicates a lack of the knowledge and experience to supervise the work, the Engineer may order the work stopped until an acceptable replacement has been certified, accepted and is in charge.

7-2.2 Prevailing Wages. Pursuant to Section 1773.2 of the Labor Code, the current prevailing rate of per diem wages at the time of the Bid as determined by the Director of the Department of Industrial Relations (DIR) are on file at the office of the Engineer. The Contractor shall post a copy of these rates at the Work site. Pursuant to Section 1774 of the Labor Code, the Contractor and any Subcontractors shall pay not less than the specified prevailing rates of wages to workers employed on the Contract. If the Contract is Federally-funded, the Contractor and any Subcontractors shall not pay less than the higher of these rates or the rates determined by the United States Department of Labor. Pursuant to Section 1775 of the Labor Code, the Contractor and any Subcontractors, shall, as a penalty to the Agency, forfeit the prescribed amounts per calendar day, or portion thereof, for each worker paid less than the prevailing wage rates. The project is subject to the compliance monitoring and enforcement by the California Department of Industrial Relations (DIR). The contractor is responsible for posting job site notices as prescribed by regulation pursuant to Labor Code section 1771.4, subdivision (a)(2). The Contractor and each Subcontractor, if any, must be registered with the DIR pursuant to Labor Code section 1725.5 and section 1771.1. The Contractor and each Subcontractor, if any, must submit certified payrolls to the Labor Commissioner pursuant to Labor Code 1771.4.

7-2.2.1 Apprentices. Apprentices shall be employed on the Work in accordance with Labor Code Section 1777.5. The Contractor is responsible for compliance with Labor Code Section 1777.5 for all apprenticeable occupations whether employed directly or through subcontractors.

7-2.2.2 Contractors' Duties Concerning Labor Code Compliance. As required by Labor Code 1775(b)(1), Labor Code Sections 1771, 1775, 1776, 1777.5, 1813 and 1815 are required to be included in the contract between the Contractor and subcontractors. The Contractor agrees to comply with these sections and all remaining provisions of the Labor Code.

7-2.3 Payroll Records. Pursuant to Section 1776 of the Labor Code the Contractor and each Subcontractor, if any, shall keep, make available, and submit to the Engineer within ten (10) days of receipt of a written request,

certified payroll records. Pursuant to Labor Code section 1776, subsection (h), the Contractor and each Subcontractor, if any, shall, as a penalty to the Agency, forfeit the prescribed amount for each calendar day, or portion thereof, for each worker, the Contractor and each Subcontractor, if any, fails to comply with that subsection until strict compliance is effectuated. The Contractor and each Subcontractor, if any, waives any right to any notice or hearing on the forfeiture of such penalties pursuant to Labor Code sections 1726 or 1771.6. The contractor shall include the in its subcontracts as required to make this paragraph effective as to each Subcontractor. Upon written request, the Contractor shall withhold penalties forfeited by a Subcontractor pursuant to Labor Code section 1776,l subsection (h), and this paragraph from payment due to such Subcontractor and remit such penalties withheld to the Agency.

7-2.4 Hours of Labor. Pursuant to Section 1810 of the Labor Code, 8 hours of labor shall constitute a legal day's work. Pursuant to Section 1813 of the Labor Code, the Contractor and any Subcontractors, shall, as a penalty to the Agency, forfeit the prescribed amount per calendar day for each worker required or permitted to work more than 8 hours in any 1 calendar day and 40 hours in any 1 calendar week without being compensated in accordance with Section 1815.

Pursuant to Section 1810 of the Labor Code, 8 hours of labor shall constitute a legal day's work. Pursuant to Section 1813 of the Labor Code, the Contractor and each Subcontractor, if any, shall, as a penalty to the Agency, forfeit the prescribed amount per calendar day for each worker required or permitted to work more than 8 hours in any 1 calendar day and 40 hours in any 1 calendar week without being compensated in accordance with Section 1815. Contractor and each Subcontractor, if any, waives any right to any notice or hearing on the forfeiture of such penalties pursuant to Labor Code sections 1726 and 1771.6. Contractor shall include terms in its subcontracts as required to make this paragraph effective as to each Subcontractor. Upon written request, Contractor shall withhold penalties forfeited by a Subcontractor pursuant to Labor Code section 1813 and this paragraph from payments due to such Subcontractor and remit such penalties withheld to the Agency

7-3 INDEPENDENCE OF CONTRACTOR, INDEMNIFICATION AND POLLUTION

7-3.1 Independence of Contractor. It is understood and agreed that Contractor is at all times an independent contractor and that no relationship of employer-employee exists between the parties hereto. Contractor will not be entitled to any benefits payable to employees of County, including but not limited to overtime, retirement benefits, workers' compensation benefits, injury leave or other leave benefits. County is not required to make any tax or benefit deductions from the compensation payable to Contractor under the provisions of this Agreement. As an independent contractor, Contractor hereby holds County harmless from any and all claims that may be made against County based upon any contention by any third party that an employer-employee relationship exists by reason of the Agreement.

If, in the performance of this Agreement, any third persons are employed by Contractor, such persons will be entirely and exclusively under the direction, supervision and control of Contractor. All terms of employment, including hours, wages, working conditions, discipline, hiring and discharging or any other terms of employment or requirements of law, will be determined by Contractor. County will have no right or authority over such persons or the terms of such employment, except as provided in this Agreement.

7-3.2 Indemnification and Hold Harmless Clause. All activities arising out of or relating to the performance of the Work covered by this Contract shall be at the risk of Contractor. To the fullest extent permitted by law, Contractor shall defend (at Agency's request), indemnify and hold harmless Agency, and the County of Ventura if the County of Ventura is not the entity defined as Agency under this Contract, including all of their boards, agencies, departments, officers, employees, agents and volunteers (collectively, "Indemnitee"), against any and all claims, suits, actions, legal or administrative proceedings, judgments, debts, demands, damages, including injury or death to any person or persons, and damage to any property including loss of use resulting therefrom, incidental and consequential damages, liabilities, interest, costs, attorneys' fees and expenses of whatsoever kind of nature, whether arising before, during or after commencement or completion of this Contract, whether against Contractor and Indemnitee or which are in any manner, directly, indirectly, in whole or in part, arising from any act, omission, fault or negligence, whether active or passive, of Contractor, a Subcontractor or anyone directly or indirectly employed by them or anyone for whose acts they may be liable in connection with or incident to the Contract, even though the same may have resulted from the joint, concurring or contributory negligence, or from the passive negligence, of Indemnitee or any other person or persons, unless the same be caused by the sole negligence of Indemnitee, or except to the extent caused by the active negligence or willful misconduct of Indemnitee.

The Agency will notify the Contractor of the receipt of any third party claims.

7-3.3 Contamination and Pollution. Contractor, solely at its own cost and expense, will provide clean up of any premises, property or natural resources contaminated or polluted due to Contractor activities. Any fines, penalties, punitive or exemplary damages assigned due to contaminating or polluting activities of the Contractor will be borne entirely by the Contractor.

7-4 INSURANCE REQUIREMENTS

Contractor, at its sole cost and expense, shall obtain and maintain in full force during the term of this Contract the following types of insurance:

7-4.1 Workers' Compensation Insurance.

7-4.1.1 Coverage. Workers' Compensation coverage, in full compliance with Labor Code 3700, for all employees of Contractor and Employer's Liability in the minimum amount of $1,000,000. The Agency, the County of Ventura, its officers, employees or Consultants, will not be responsible for any claims in law or equity occasioned by failure of Contractor to comply with this paragraph.

7-4.1.2 Certification. Before execution of the Contract by Agency, Contractor shall file with the Engineer the following signed certification:

> "I am aware of the provisions of Section 3700 of the Labor Code which require every employer to be insured against liability for workers' compensation or to undertake self-insurance in accordance with the provisions of that code, and I will comply with such provisions before commencing the performance of the Work of this Contract."

7-4.2 Commercial General Liability Insurance

7-4.2.1 Minimum Limits and Scope; Insurance Classes. "Occurrence" coverage in the minimum amount of:

Coverage Class	Coverage
L-A	$ 1,000,000 combined single limit (CSL) bodily injury and property damage each occurence and $1,000,000 aggregate
L-B	$ 1,000,000 CSL bodily injury and property damage each occurrence and $2,000,000 aggregate
L-C	$ 5,000,000 CSL bodily injury and property damage each occurrence and $5,000,000 aggregate
L-D	$ 10,000,000 CSL bodily injury and property damage each occurrence and $10,000,000 aggregate

If no coverage class is specified in "Proposal", coverage class L-B shall apply.

If Contractor maintains higher limits than the minimums shown above, the Agency requires and shall be entitled to coverage for the higher limits maintained by the Contractor. Any available insurance proceeds in excess of the specified minimum limits of insurance and coverage shall be available to the Agency.

Coverages shall include premises/operations; products/completed operations; independent contractors; underground, explosion and collapse hazards; personal and advertising injury; broad form property damage; and broad form blanket contractual.

7-4.2.2 Coverage Exceptions. On projects where no explosives will be used and no demolition is involved, the coverage for explosion may be omitted. On projects where no excavation is involved, the coverage for underground hazard may be omitted. The omission of said coverages is at Agency's option, and shall not abrogate Contractor's responsibilities for indemnification as set forth in these Specifications.

7-4.2.3 Excess Liability Policies. All Excess Liability policies, if used, shall be on an "umbrella" or following form of the primary layer of coverage.

7-4.3 Commercial Automobile Liability Insurance

Coverage in the minimum amount of $1,000,000 CSL bodily injury and property damage, including automobile liability, any auto.

7-4.4 Property Insurance

Contractor shall arrange for its own "Course of Construction" insurance on the project to protect its interests, as Agency does not have this coverage.

Contractor is responsible for delivering to Agency Work completed in accordance with the Contract except as provided in 7-18 (Acts of God). Should the Work being constructed be damaged by fire or other causes during construction, it shall be replaced by Contractor in accordance with the requirements of the Plans and Specifications without additional expense to Agency.

7-4.5 Other Insurance Provisions.

7-4.5.1 Insurance Company Qualifications. All insurance required shall be issued by (a) an admitted company or admitted companies authorized to transact business in the State of California which have a BEST rating of B+ or higher and a Financial Size Category (FSC) of VII or larger or (b) a California approved Surplus Line carrier or carriers which have a BEST rating of A or higher and a Financial Size Category (FSC) of VII or larger.

Workers compensation insurance not meeting the above requirements but meeting all other requirements of the specifications, will be accepted.

7-4.5.2 Primary Coverage. All insurance required shall be primary coverage as respects Agency and any insurance or self-insurance maintained by Agency or the County of Ventura shall be in excess of Contractor's insurance coverage and shall not contribute to it.

7-4.5.3 Aggregate Limits Exceeded. Agency shall not be notified immediately if any aggregate insurance limit is exceeded. Contractor shall purchase additional coverage to meet requirements.

7-4.5.4 Liability in Excess of Limits. Insurance coverage in the minimum amounts set forth herein shall not be construed to relieve Contractor for liability in excess of such coverage, nor shall it preclude Agency or the County of Ventura from taking such other actions as is available to it under any other provisions of this Contract or otherwise in law.

7-4.5.5 Additional Insured Endorsements. The Agency, the County of Ventura (if not defined as Agency) and all special Districts governed by the County of Ventura Board of Supervisors, and their officials, employees, and volunteers shall be named as Additional Insured as respects Work done by or on behalf of Contractor under the Contract on all policies required (except workers' compensation). With respect to Contractor's commercial general Liability insurance, Additional Insured coverage shall include both ongoing and completed operations.

7-4.5.6 Waiver of Subrogation Rights. Contractor agrees to waive all rights of subrogation against the Agency, the County of Ventura, including its boards, and all special Districts governed by the Board of Supervisors, for losses arising directly or indirectly from the activities or Work performed by Contractor under the Contract (applies only to Workers' Compensation and Commercial General Liability).

7-4.5.7 Cancellation Notice Required. In the case of policy cancellation, Agency shall be notified by the insurance company or companies as provided for in the policy. Contractor shall notify Agency of any and all policy cancellations within three working days of the cancellation.

7-4.5.8 Documentation Required. Prior to execution of the Contract by Agency, Contractor shall provide Agency with Certificates of Insurance for all required coverages (see Appendix A for example), all required endorsement(s) and a copy of its course of insurance policy.

It is the responsibility of Contractor to confirm that all terms and conditions of Section 7-4 Insurance Requirements are complied with by any and all subcontractors that Contractor may use in the completion of the Contract.

7-5 PERMITS. The Agency will obtain, at no cost to the Contractor, all encroachment and building permits necessary to perform Contract Work in streets, highways, railways or other rights of way, unless the necessity for such permit(s) is created by a method of operation chosen by the Contractor. The Contractor shall obtain and pay for all costs incurred for permits necessitated by its operations such as, but not limited to, those permits required for night Work, overload, blasting and demolition.

The Contractor shall pay all business taxes or license fees that are required for the Work.

7-5.1 Highway and Railroad Permits. The Engineer will obtain the basic State highway and railroad encroachment permits which will include checking of plans. However, the Contractor must also obtain permits from these agencies. Inspection fees charged by these agencies must be paid by the Contractor.

7-5.2 Grading Ordinance

7-5.2.1 General. All excavation, filling and grading operations in Ventura County are governed by the Ventura County Grading Ordinance or City Ordinances, except within the project right of way shown on the Plans.

7-5.2.2 Permits Required. Work outside the project right of way which involves excavation or filling of soils is subject to all requirements of the applicable grading ordinance. The requirements may include, but are not limited to, submitting of a grading plan prepared by a Civil Engineer, obtaining a grading permit, paying the permit fee, posting a grading bond, hiring professionals for engineering and testing services, compacting fills, constructing drainage facilities and providing erosion protection.

7-5.2.3 Imported and Exported Material. To insure that neither the Agency nor the Contractor is a party to aiding or abetting any property owner (who is ultimately responsible) to violate the applicable grading ordinance, no material shall be imported from or exported or wasted outside the project right of way until the Contractor has furnished the Engineer a copy of the grading permit covering such operation on land where material is to be deposited or excavated, unless exempt.

7-5.2.4 Exemptions from Permit. No grading permit is required of the Contractor for Work performed within the project right of way shown on the Plans or on borrow or disposal areas shown on the Plans or described in the Special Provisions and which are specifically designated as being exempt from such permit requirements.

7-5.3 Building Permit.

7-5.3.1 Agency Furnished Permits. Except as provided in **7-5.3.2**, Agency will submit the plans for the Work to Department of Building and Safety, and other building related permit issuing agencies, for plan check and make the corrections necessary for the issuance of building and related permits. Agency will Pay plan check and permit fees for the Work. The Contractor may be required to furnish information to the permit issuing agencies, as required for the issuance of permits, and sign the permit.

7-5.3.2 Contractor Furnished Permits. Components or systems, required by the Contract, may require the preparation of plans and calculations to obtain approvals or permits from state or local building, fire prevention, public health, safety, environmental protection and other agencies in addition to the basic permits arranged for by the Agency as provided in **7-5.3.1**. Contractor shall take all actions in a timely manner to obtain such approvals or permits so as not to delay completion of the Work beyond the time provided in **6-7**. Contractor shall include all costs and consider the time required to obtain approvals or permits in the Contract price bid.

7-5.4 Coastal Zone Permits

7-5.4.1 Agency Furnished Permits. Permits required for Work on the project within rights of way furnished by the Agency within the Coastal Zone will be obtained by the Agency.

7-5.4.2 Contractor Furnished Permits. Permits required for the Contractor's operations outside of rights of way furnished by the Agency must be obtained by the Contractor. Such permits are required for brush removal, grading, dredging, disposal of material and many other operations within the Coastal Zone.

7-6 THE CONTRACTOR'S REPRESENTATIVE. Before starting work, the Contractor shall designate in writing a representative who shall have complete authority to act for it. An alternative representative may be designated as well. The representative or alternate shall be present at the Work site whenever work is in progress or whenever actions of the elements necessitate its presence to take measures necessary to protect the Work, persons, or property. Any order or communication given to this representative shall be deemed delivered to the Contractor. A joint venture shall designate only one representative and alternate. In the absence of the Contractor or its representative, instructions or directions may be given by the Engineer to the superintendent or person in charge of the specific work to which the order applies. Such order shall be complied with promptly and referred to the Contractor or its representative.

In order to communicate with the Agency, the Contractor's representative, superintendent, or person in charge of specific work shall be able to speak, read, and write the English language.

7-7 COOPERATION AND COLLATERAL WORK. The Contractor shall be responsible for ascertaining the nature and extent of any simultaneous, collateral, and essential work by others. The Agency, its workers and contractors and others, shall have the right to operate within or adjacent to the Work site during the performance of such work.

The Agency, the Contractor, and each of such workers, contractors and others, shall coordinate their operations and cooperate to minimize interference.

The Contractor shall include in its Bid all costs involved as a result of coordinating its work with others. The Contractor will not be entitled to additional compensation from the Agency for damages resulting from such simultaneous, collateral, and essential work. If necessary to avoid or minimize such damage or delay, the Contractor shall redeploy its work force to other parts of the Work.

Should the Contractor be delayed by the Agency, and such delay could not have been reasonably foreseen or prevented by the Contractor, the Engineer will determine the extent of the delay, the effect on the Work, and any extension of time.

7-8 WORK SITE MAINTENANCE

7-8.1 General Throughout all phases of construction, including suspension of the Work, and until acceptance per 6-8, the Contractor shall keep the Work site clean and free from rubbish and debris. Rubbish and debris collected on the Work site shall only be stored in roll-off, enclosed containers prior to disposal. Stockpiles of such will not be allowed.

When required by the Special Provisions, the Contractor shall provide a self-loading motorized street sweeper equipped with a functional water spray system. The sweeper shall clean all paved areas within the Work site and all paved haul routes at least once each working day.

The Contractor shall ensure there is no spillage along haul routes. Any such spillage shall be removed immediately and the area cleaned.

Should the Contractor fail to keep the Work site free from rubbish and debris, the Engineer may suspend the Work per 6-3 until the condition is corrected.

7-8.2 Air Pollution Control The Contractor shall not discharge smoke, dust, equipment exhaust, or any other air contaminants into the atmosphere in such quantity as will violate any Federal, State, or local regulations.

The Contractor shall also abate dust nuisance by cleaning, sweeping and spraying with water, or other means as necessary. The use of water shall conform to 7-8.6.

7-8.3 Noise Control. Noise generated from the Contractor's operations shall be controlled as specified in the Special Provisions.

7-8.4 Storage of Equipment and Materials.

7-8.4.1 General Materials and equipment shall be removed from the Work site as soon as they are no longer necessary. Before inspection by the Engineer for acceptance, the Work site shall be cleared of equipment, unused materials, and rubbish so as to present a satisfactory clean and neat appearance.

Excess excavated material shall be removed from the Work site immediately unless otherwise specified in the Special Provisions.

Forms and form lumber shall be removed from the Work site as soon as practicable after stripping.

7-8.4.2 Storage in Public Streets. Construction materials and equipment shall not be stored in streets, roads, or highways for more than 5 days after unloading unless otherwise specified in the Special Provisions or approved by the Engineer. All materials or equipment not installed or used in construction within 5 days after unloading shall be stored at a location approved by the Engineer.

Excavated material, except that which is to be used as backfill in the adjacent trench, shall not be stored in public streets unless otherwise specified in the Special Provisions or approved by the Engineer. Immediately after placing backfill, all excess material shall be removed from the Work site.

7-8.5 Sanitary Sewers.

7-8.5.1 General. The flow of sewage shall not be interrupted. Should the Contractor disrupt the operation of existing sanitary sewer facilities, or should disruption be necessary for performance of the Work, the Contractor shall bypass the sewage flow around the Work. Sewage shall be conveyed in closed conduits and disposed of in a sanitary sewer system. Sewage shall not be permitted to flow in trenches nor be covered by backfill.

Whenever sewage bypass and pumping is required by the Plans or Specifications, or the Contractor so elects to perform, the Contractor shall submit per 2-5.3 a working drawing conforming to 7-8.5.2 detailing its proposed plan of sewage bypass and pumping.

7-8.5.2 Sewage Bypass and Pumping Plan. The plan shall indicate the locations and capacities of all pumps, sumps, suction and discharge lines. Equipment and piping shall be sized to handle the peak flow of the section of sewer line to be bypassed and pumped. Equipment and piping shall conform to 7-10, the Plans, and the Special Provisions. Bypass piping, when crossing areas subject to traffic loads, shall be constructed in trenches with adequate cover and otherwise protected from damage due to traffic. Lay-flat hose or aluminum piping with an adequate casing and/or traffic plates may be allowed if so approved by the Engineer. Bypass pump suction and

discharge lines that extend into manholes shall be rigid hose or hard pipe. Lay flat hose will not be allowed to extend into manholes. The Contractor shall provide a backup bypass pumping system in case of malfunction. The backup bypass system shall provide 100 percent standby capability, and be in place and ready for immediate use.

Each standby pump shall be a complete unit with its own suction and discharge piping. In addition to the backup system, the Contractor shall furnish and operate vacuum trucks when required by the Plans or Special Provisions.

7-8.5.3 Spill Prevention and Emergency Response Plan. The Contractor shall prepare and submit per 2-5.3 a spill prevention and emergency response plan. The plan shall address implementation of measures to prevent sewage spills, procedures for spill control and containment, notifications, emergency response, cleanup, and spill and damage reporting.

The plan shall account for all storm drain systems and water courses within the vicinity of the Work which could be affected by a sewage spill. Catch basins that could receive spilled sewage shall be identified Unless otherwise specified in the Special Provisions, these catch basins shall be sealed prior to operating the bypass and pumping system. The Contractor shall remove all material used to seal the catch basins when the bypass and pumping system operations are complete.

The Contractor shall be fully responsible for containing any sewage spillage, preventing any sewage from reaching a watercourse, recovery and legal disposal of any spilled sewage, any fines or penalties associated with the sewage spill imposed upon by the Agency and/or the Contractor by jurisdictional regulatory agencies, and any other expenses or liabilities related to the sewage spill.

7-8.6 Water Pollution Control The Contractor shall prevent, control, and abate discharges of pollutants from the construction site in order to protect the storm drain system, which includes pipes, channels, streams, waterways, and other bodies of water, by the construction, installation or performance of water pollution control measures as shown on the Stormwater Pollution Control Plan (SWPCP) or Stormwater Pollution Prevention Plan (SWPPP) depending on the land area affected by the construction activity. The Contractor shall ensure compliance with the current State NPDES General Permit for Stormwater Discharges Associated with Construction and Land Disturbance Activity (General Construction Permit), NPDES No. CAS000002 and current Ventura County NPDES Municipal Separate Storm Sewer System (MS4) Permit No. CAS004002.

7-8.6.1 Compliance with NPDES General Construction Permit

7-8.6.1.1 Construction Sites

If the Work involves construction activity that results in soil disturbance of one acre or more of total land area, or results in soil disturbances of less than one acre but is a part of a work area larger than one acre, the Contractor shall comply with the requirements of the General Construction Permit NPDES No. CAS000002. Construction activity includes clearing, grading, excavation, stockpiling, and reconstruction of existing facilities involving removal and replacement. Construction activity does not include routine maintenance such as, maintenance of original line and grade, hydraulic capacity, or original purpose of the facility.

The Contractor shall comply with requirements of the General Construction Permit (NPDES No. CAS000002), obtained by the Agency, including a site-specific Storm Water Pollution Prevention Plan (SWPPP) for the Work to be developed by Qualified SWPPP Developer (QSD) and implemented by the Qualified SWPPP Practitioner (QSP). After July 1, 2010, the Agency will electronically file all required Permit Registration Documents (PRDs) through the State Water Board's Stormwater Multi-Application and Report Tracking System (SMARTS) website, as required prior to the commencement of construction activity. PRDs consist of the Notice of Intent (NOI), Risk Assessment, Post-Construction Calculations, a Site Map, the SWPPP, a signed certification statement by the Legally Responsible Party (LRP), and the first annual fee. For the Permit application, the Contractor shall submit to Project Manager the following:

- The completed site-specific Risk Assessment
- Post-construction calculations if applicable for the project, and
- Site-specific SWPPP developed in accordance with applicable Permits.

7-8.6.1.2 Linear Utility Projects; Contractor shall comply with the requirements of the General Construction Permit NPDES No. CAS000002 for Linear Underground/Overhead projects (LUPs) one acre or greater.

7-8.6.2 Compliance with NPDES MS4 Permit

7-8.6.2.1 Construction Sites Less Than One Acre The Contractor shall ensure implementation of an effective combination of erosion and sediment control Best Management Practices (BMPs) listed in **Table 6** of the Ventura County NPDES MS4 Permit. The Contractor shall develop and implement a Storm Water Pollution Control Plan (SWPCP).

7-8.6.2.2 Construction Sites One Acre but Less Than 5 Acres The Contractor shall ensure implementation of an effective combination of appropriate erosion and sediment control BMPs from **Table 7** (BMPs at Construction sites 1 acre or greater but less than 5 acres) of the Ventura County NPDES MS4 Permit in addition to the ones identified in **Table 6** (BMPs at Construction sites less than 1 acre) to prevent erosion and sediment loss, and the discharge of construction wastes. For all construction sites one acre or greater, the Contractor shall submit the SWPPP to the Agency for review and certification as the Local SWPPP.

7-8.6.2.3 Construction Sites 5 Acres and Greater The Contractor shall ensure implementation of an effective combination of the following BMPs in **Tables 8** (BMPs at Construction sites 5 acres or greater) in addition to the ones identified in **Table 6** (BMPs at Construction sites less than 1 acre) and **Table 7** (BMPs at Construction sites 1 acre or greater but less than 5 acres) at all construction sites 5 acres and greater to prevent erosion and sediment loss, and the discharge of construction wastes. For all construction sites one acre or greater, the Contractor shall submit the SWPPP to the Agency for review and certification as the Local SWPPP.

7-8.6.2.4 Enhanced Construction BMP Implementation

Construction sites located on hillsides, adjacent or directly discharging to CWA 303(d) listed waters for siltation or sediment, and directly adjacent to Environmentally Sensitive Areas are termed "high risk sites." Contractor shall implement enhanced practices that preclude impacts to water quality posed by the high risk sites.

Contractor shall ensure that high risk sites are inspected by the Qualified SWPPP Developer, Qualified SWPPP Practitioner, or Certified Professionals in Erosion and Sediment Control (CPESC) at the time of BMP installation, at least weekly during the wet season, and at least once each 24 hour period during a storm event that generates runoff from the site, to identify BMPs that need maintenance to operate effectively, that have failed or could fail to operate as intended.

During the wet season, the area of disturbance shall be limited to the area that can be controlled with an effective combination of erosion and sediment control BMPs. Enhanced sediment controls should be used in combination with erosion controls and should target portions of the site that cannot be effectively controlled by standard erosion controls described above. Effective sediment and erosion control BMPs proposed by the Contractor shall include the BMPs listed in Table 9 (Enhanced Construction BMP Implementation) of the NPDES MS4 Permit. The Contractor shall implement the BMPs listed in Table 9 unless shown unnecessary. Also, the Contractor shall retain records of the inspection and a determination and rationale of the BMPs selected to control runoff.

7-8.6.3 Plan.

7-8.6.3.1 The SWPCP, required for construction projects less than one acre, shall be prepared in accordance with the requirements of current Ventura County NPDES MS4 Permit No. CAS004002 and County Ordinance No. 4142.

7-8.6.3.2 The SWPPP, required for construction projects one acre or greater, shall be prepared in accordance with the requirements of the state's General Construction Permit NPDES Permit CAS000002, Ventura Countywide Stormwater Quality Management Program, NPDES MS4 Permit No. CAS004002, and County Ordinance No. 4142.

7-8.6.3.3 The SWPCP/SWPPP shall identify potential pollutant sources on the construction site that may affect the quality of discharges, whether non-stormwater or stormwater, from the site and design the use and placement of water pollution control measures, BMPs, to effectively prohibit the entry of pollutants from the site into the storm drain system during construction. At a minimum, and depending on the size of the project area, the SWPCP/SWPPP will include all appropriate minimum BMPs as required by the Ventura Countywide Stormwater Quality Management Program, NPDES MS4 Permit No. CAS004002 (Tables 6 through 9). The SWPCP/SWPPP must utilize the measures recommended in the California Stormwater Quality Association (CASQA) Stormwater BMPs Handbook for Construction (January 2003 version until July 1, 2010 and 2009 version after July 1, 2010). Starting July 1, 2010 SWPPP shall be prepared by QSD as defined in the NPDES Permit CAS000002. The Contractor shall complete, sign and submit the SWPCP/SWPPP for review and final approval by the Project Engineer, prior to issuance of the Notice to Proceed as provided in 6-7.4.

7-8.6.3.4 For all construction projects one acre and greater, the Contractor shall submit the SWPPP to the Agency for review and certification as Local SWPPP in accordance with NPDES MS4 Permit No. CAS004002 prior to the Notice to Proceed as provided in 6-7.4.

7-8.6.4 Measures. All water pollution control measures shall conform to the requirements of the submitted SWPCP/SWPPP. If circumstances during the course of construction require changes to the original SWPCP/SWPPP, a revised SWPCP/SWPPP shall be promptly submitted to the Project Manager in each instance. The SWPPP shall be amended or revised by QSD. A copy of the current SWPCP/SWPPP including revisions and amendments shall be kept at the site to ensure that field personnel has access to the current document at all times. If measures being taken are inadequate to control water pollution effectively, the Project Manager may direct the Contractor to revise the operations and no further work shall be performed until adequate water pollution control measures are implemented. Effective September 2, 2011, implementation of the SWPPP shall be overseen by the Contractor's QSP as defined in the General Construction Permit NPDES No. CAS000002. All work installed by the Contractor in connection with the SWPCP/SWPPP but not specified to become a permanent part of the Work shall be removed and the site restored in so far as practical to its original condition prior to completion of the Work.

7-8.6.4.1 Post-Construction Standards; Contractor shall ensure that applicable post-construction standards are implemented to meet applicable project requirements of the Ventura County NPDES MS4 Permit and General Construction Permit NPDES No. CAS000002 (effective September 2, 2012).

7-8.6.4.2 Active Treatment Systems; Contractor shall comply with requirements of the General Construction Permit NPDES No. CAS000002 for active treatment systems as applicable.

7-8.6.5 Monitoring and Reporting

7-8.6.5.1 Monitoring; In accordance with the General Construction Permit NPDES No. CAS000002, the Contractor shall develop and implement monitoring program for Risk Level 2 and 3 sites. In addition at Risk Level 3 sites, contractor shall perform receiving water monitoring to meet Permit requirements.

7-8.6.5.2 Reporting; the Contractor shall ensure that all submittals and reports are prepared and submitted to the RWQCB in accordance with the applicable Permits. At minimum the reports will include Annual Report (for applicable projects due September 1st), Rain Event Action Plan (due 48 hrs prior to the rain event for the applicable projects), Numeric Action Levels (NAL) Exceedance Report (as required), Numeric Effluent Limitations (NELs) Violation Report (within 24 hours after NEL exceedance is identified). Contractor shall submit required reports to the Project Manager for review and approval prior to submittal to the RWQCB.

7-8.6.6 Dewatering Activities. All dewatering activities shall be performed in accordance with applicable regulatory requirements issued by the Los Angeles Regional Water Quality Control Board, including specific requirements contained in the Waste Discharge Requirements (WDR) when issued for the Work.

7-8.6.7 Payment. The Contract lump sum price for water pollution control shall include full compensation for furnishing all labor, materials, tools, equipment, services and incidentals and for doing all work involved in water pollution control as specified herein. Payment for water pollution control will be made as the Work proceeds, and is in compliance with the approved Water Pollution Control Plan, on the following basis.

Partial payment estimate (excluding mobilization & water pollution control payments) as a percentage of the original Contract price (excluding the mobilization & water pollution control Bid items).		Cumulative amount of water pollution control pay item earned is the lesser of the amounts as computed by these two columns.	
Equal to or greater than	Less than	Percentage of water pollution control pay item	Percentage of the original Contract total.
5	10	10	1
10	20	20	2
20	50	50	3
50	Completion of Work	75	5
Completion of Work		100	

Where no Bid item is provided for water pollution control, payment for water pollution control shall be considered to be included in the other Bid items.

7-8.7 Drainage Control. The Contractor shall maintain drainage within and through the Work areas. Earth dams will not be permitted in paved areas. Temporary dams of sandbags, asphaltic concrete or other acceptable material will be permitted when necessary to protect the Work, provided their use does not create a hazard or nuisance to the public. Such dams shall be removed from the site as soon as their use is no longer necessary.

7-8.8 Final Cleaning. At the completion of the Work, the Contractor shall remove all waste materials and rubbish from and about the project, as well as all tools, construction equipment, temporary facilities, machinery, and surplus materials.

At completion of construction and just prior to final inspection, the Contractor shall thoroughly clean the interior and exterior of the buildings, including hardware, floors, roofs, sills, ledges, glass, or other surfaces where debris, plaster, paint, spots, and dirt or dust may have collected. All glass shall be washed clean and polished. Remove all grease, stains, labels, fingerprints, and other foreign materials from interior and exterior surfaces. Repair, patch, and touch up marred surfaces to match adjacent finishes.

The Contractor shall use only experienced workmen or professional cleaners for final cleaning. It shall use only cleaning materials recommended by the manufacturer of the surface to be cleaned, and use cleaning materials only on surfaces recommended by the cleaning material manufacturer.

It shall broom-clean all paved surfaces and rake-clean other surfaces of grounds.

The Contractor shall replace air conditioning filters if units were operated during construction, and clean all ducts, blowers, and coils if air conditioning units were operated without filters during construction.

After cleaning, the Contractor shall maintain the building in a clean condition until it is accepted by the Agency.

7-9 PROTECTION AND RESTORATION OF EXISTING IMPROVEMENTS. The Contractor shall be responsible for the protection of public and private property adjacent to the Work and shall exercise due caution to avoid damage to such property.

The Contractor shall repair or replace all existing improvements within the right-of-way which are not designated for removal (e.g., curbs, sidewalks, driveways, fences, walls, signs, utility installations, pavement, structures, etc.) which are damaged or removed as a result of its operations. When a portion of a sprinkler system within the right-of-way must be removed, the remaining lines shall be capped. Repairs and replacements shall be at least equal to existing improvements and shall match them in finish and dimension.

Maintenance of street and traffic signal systems that are damaged, temporarily removed or relocated shall be done in conformance with 307-1.5.

Trees, lawns, and shrubbery that are not designated to be removed shall be protected from damage or injury. If damaged or removed because of the Contractor's operations, they shall be restored or replaced in as nearly the original condition and location as is reasonably possible. Lawns shall be reseeded and covered with suitable mulch.

The Contractor shall give reasonable notice to occupants or owners of adjacent property to permit them to salvage or relocate plants, trees, fences, sprinklers and other improvements which are designated for removal and would be destroyed because of the Work.

All costs to the Contractor for protecting, removing, and restoring existing improvements shall be absorbed in its bid.

In existing buildings, all surfaces, equipment, furniture and other property shall be protected from loss or damage by or as result of the Contractor's operations. The Contractor shall replace damaged property or shall repair and restore it to its previous condition. Patching, painting, replacement of wall, ceiling and floor covering and similar Work shall be done in such a manner that the repaired Work will not be readily noticeable.

7-10 PUBLIC CONVENIENCE AND SAFETY

7-10.1 Access.

7-10.1.1 General. The Contractor's operations shall cause no unnecessary inconvenience to the public or businesses in the vicinity of the Work. The Contractor shall have no greater length or quantity of Work under construction than can be properly prosecuted with a minimum of inconvenience to the public and other contractors engaged in adjacent or related work.

The Contractor shall provide continuous and unobstructed access to the adjacent properties unless otherwise specified in the Special Provisions or approved by Engineer. Work requiring traffic lane closures shall only be performed between the hours specified in the Special Provisions or shown on the TCP. Traffic shall be permitted to pass through the Work site, unless otherwise specified in the Special Provisions or shown on the TCP.

7-10.1.1.1 Vehicular Access. Vehicular access to residential driveways shall be maintained to the property line except when necessary construction precludes such access. If backfill has been completed to the extent that safe access may be provided and the street is opened to local traffic, the Contractor shall immediately clear the street and driveways and provide and maintain access.

7-10.1.1.2 Pedestrian Access. Safe, adequate, and ADA compliant pedestrian access shall be maintained unless otherwise approved by the Engineer. 7-10.2 Work Area Traffic Control.

7-10.2 Traffic Control

7-10.2.1 General. Work area traffic control shall conform to the California MUTCD, WATCH, or as specified in the Special Provisions. The total length of the traffic control zone shall include a buffer space, advance signing, striping transitions in advance of the Work site, existing striping, signing, and raised medians.

7-10.2.2 Traffic Control Plan.

7-10.2.2.1 General. If so specified in the Special Provisions or on the permit, the Contractor shall submit a TCP in accordance with 2-5.3. The sheets of the TCP shall display the title, phase identification, name of the firm preparing the TCP, name and stamp of the Registered Traffic or Civil Engineer, approval block for each jurisdictional agency, north arrow, sheet number, and number of sheets comprising the TCP. General notes and symbol definitions shall be included when required. Adequate dimensioning shall be provided to allow for proper field installation. The TCP shall be drawn to a 1 inch = 40 feet scale on common size sheets, either 8-1/2 inches x 11 inches, 8-112 inches x 14 inches, 11 inches x 17 inches, or 2-foot x 3-foot plan sheets as dictated by the length of the Work.

The requirements in the Special Provisions shall govern the design of the proposed TCP.

7-10.2.2.2 Payment. Payment for preparation of the TCP shall be included in the appropriate lump sum Bid items. If no Bid items have been provided, payment shall be included in the various Bid items unless otherwise specified in the Special Provisions.

7-10.3 Haul Routes. Unless otherwise specified in the Special Provisions, the haul route(s) shall be determined by the Contractor.

7-10.4 Safety.

7-10.4.1 Work Site Safety.

7-10.4.1.1 General. The Contractor shall provide safety measures as necessary to protect the public and workers within, or in the vicinity of, the Work site. The Contractor shall ensure that its operations will not create safety hazards. The Contractor shall provide safety equipment, material, and assistance to Agency personnel so that they may properly inspect all phases of the Work. When asbestos is being removed, the requirements of the CCR Title 8, Div. 1, Chapter 4, Subchapter 4 and Subchapter 7 shall be implemented.

7-10.4.1.2 Work Site Safety Official. The Contractor shall designate in writing a "Project Safety Official" who shall be at the Work site at all times, and who shall be thoroughly familiar with the Contractor's Injury and Illness Prevention Program (IIPP) and Code of Safe Practices (CSP). The Project Safety Official shall be available at all times to abate any potential safety hazards and shall have the authority and responsibility to shut down an unsafe operation, if necessary.

7-10.4.2 Safety Orders.

7-10.4.2.1 General. The Contractor shall have at the Work site, copies or suitable extracts of Construction Safety Orders, Tunnel Safety Orders, and General Industry Safety Orders issued by the State Division of Industrial Safety. Prior to beginning any excavation 5 feet in depth or greater, the Contractor shall submit to the Engineer, the name of the "Competent Person" as defined in CCR, Title 8, Section 1504, in accordance with 2-5.3. The "Competent Person" shall be present at the Work site as required by Cal-OSHA.

7-10.4.2.2 Shoring Plan. Before excavating any trench 5 feet (105m) or more in depth, the Contractor shall submit in accordance with 2-5.3 a detailed working drawing (shoring plan) showing the design of the shoring, bracing, sloping, or other provisions used for the workers' protection. If the shoring plan varies from the shoring system standards, the shoring plan shall be prepared by a registered Structural or Civil Engineer. The shoring plan shall accommodate existing underground utilities. No excavation shall start until the Engineer has accepted the shoring plan and the Contractor has obtained a permit from the State Division of Industrial Safety. A copy of the permit shall be submitted to the Engineer in accordance with 2-5.3. If the Contractor fails to submit a shoring plan or fails to comply with an accepted shoring plan, the Contractor shall suspend work at the affected location(s) when directed to do so by the Engineer. Such a directive shall not be the basis of a claim for Extra Work and the Contractor shall not receive additional compensation or Contract time due to the suspension.

7-10.4.2.3 Payment. Payment for shoring shall be included in the Bid item provided therefor. Payment for compliance with the provisions of the safety orders and all other laws, ordinances, and regulations shall be included in the various Bid items.

7-10.4.3 Use of Explosives. Explosives may be used only when authorized in writing by the Engineer, or as otherwise specified in the Special Provisions.

Explosives shall be handled, used, and stored in accordance with all applicable regulations.

Prior to blasting, the Contactor shall comply with the following requirements:

a) The jurisdictional law enforcement agency shall be notified 24 hours in advance of blasting.

b) The jurisdictional fire department shall be notified 24 hours in advance of blasting.

c) Blasting activities and schedule milestones shall be included in the Contractor's construction schedule per 6-1.

For a Private Contract, specific permission shall be obtained from the Agency in writing, prior to any blasting operations in addition to the above requirements.

The Engineer's approval of the use of explosives shall not relieve the Contractor from liability for claims caused by blasting operations.

7-10.4.4 Hazardous Substances. An MSDS as described in CCR, Title 8, Section 5194, shall be maintained at the Work site for all hazardous material used by the Contractor. Material usage shall be accomplished with strict adherence to California Division of Industrial Safety requirements and all manufacturer warnings and application instructions listed on the MSDS and on the product container label. The Contractor shall notify the Engineer if a specified product cannot be used under safe conditions. 7-10.4.5 Confined Spaces. 7-10.4.5.1 Confined Space Entry Program (CSEP). The Contractor shall be responsible for implementing, administering and maintaining a CSEP in accordance with CCR, Title 8, Sections 5156, 5157 and 5158.

Prior to the start of the Work, the Contractor shall prepare and submit a CSEP in accordance with 2-5.3. The CSEP shall address all potential physical and environmental hazards and contain procedures for safe entry into confined spaces such as the following:

a) Training of personnel

b) Purging and cleaning the space of materials and residue

c) Potential isolation and control of energy and material inflow

d) Controlled access to the space

e) Atmospheric testing of the space

f) Ventilation of the space

g) Special hazards consideration

h) Personal protective equipment

i) Rescue plan provisions

The submittal shall include the names of the Contractor's personnel, including each Subcontractor's personnel, assigned to the Work that will have CSEP responsibilities, their CSEP training, and their specific assignment and responsibility in carrying out the CSEP.

7-10.4.5 Confined Spaces.

7-10.4.5.1 Confined Space Entry Program (CSEP). The Contractor shall be responsible for implementing, administering and maintaining a CSEP in accordance with CCR, Title 8, Sections 5156, 5157 and 5158.

Prior to the start of the Work, the Contractor shall prepare and submit a CSEP in accordance with 2-5.3. The CSEP shall address all potential physical and environmental hazards and contain procedures for safe entry into confined spaces such as the following:

a) Training of personnel.

b) Purging and cleaning the space of materials and residue.

c) Potential isolation and control of energy and material inflow.

d) Controlled access to the space.

e) Atmospheric testing of the space.

f) Ventilation of the space.

g) Special hazards consideration.

h) Personal protective equipment.

i) Rescue plan provisions.

The submittal shall include the names of the Contractor's personnel, including each Subcontractor's personnel, assigned to the Work that will have CSEP responsibilities, their CSEP training, and their specific assignment and responsibility in carrying out the CSEP.

7-10.4.5.2 Permit-Required Confined Spaces. Entry into permit-required confined spaces as defined in CCR, Title 8, Section 5157 may be required as a part of the Work. Manholes, tanks, vaults, pipelines, excavations, or other enclosed or partially enclosed spaces shall be considered permit-required confined spaces until the pre-entry procedures demonstrate otherwise. The Contractor shall implement a permit-required CSEP prior to performing any work in a permit-required confined space. A copy of the permit shall be available at all times for review by the Contractor and the Engineer at the Work site.

7-10.4.5.3 Payment. Payment for the CSEP shall be included in the Bid items for which the CSEP is required.

7-10.5 Security and Protective Devices.

7-10.5.1 General. Security and protective devices shall consist of fencing, steel plates, or other devices as specified in the Special Provisions to protect open excavations

7-10.5.2 Security Fencing. The Contractor shall completely fence open excavations. Security fencing shall conform to 304-3.5. Security fencing shall remain in place unless workers are present and construction operations are in progress during which time the Contractor shall provide equivalent security..

7-10.5.3 Steel Plate Covers. The Contractor shall provide steel plate covers as necessary to protect from accidental entry into openings, trenches, and excavations.

7-11 PATENT FEES OR ROYALTIES. The Contractor shall absorb in its Bid, the patent fees or royalties on any patented article or process which may be furnished or used in the Work. The Contractor shall indemnify and hold the Agency harmless from any legal action that may be brought for infringement of patents.

7-12 ADVERTISING. The names of contractors, subcontractors, architects, or engineers, with their addresses and the designation of their particular specialties, may be displayed on removable signs. The size and location of such signs shall be subject to the Engineer's approval.

Commercial advertising matter shall not be attached or painted on the surfaces of buildings, fences, canopies, or barricades.

7-13 LAWS TO BE OBSERVED. The Contractor shall keep fully informed of State and National laws and County and Municipal ordinances and regulations which in any manner affect those employed in the Work or the materials used in the Work or in any way affect the conduct of the Work. It shall at all times observe and comply with all such laws, ordinances and regulations.

7-13.1 Mined Materials. Mined material from California surface mines, used on the Work, shall be from a mine identified in the list published by the California Department of Conservation (referred to as 3098 List), as required by Public Contract Code 20676. This list is available on the Internet at www.conservation.ca.gov/OMR/ab_3098_list/index.htm.

7-14 ANTITRUST CLAIMS. Section 7103.5 of the Public Contract Code provides:

> "In entering into a public works contract or a subcontract to supply goods, services, or materials pursuant to a public works contract, the contractor or subcontractor offers and agrees to assign to the awarding body all rights, title, and interest in and to all causes of action it may have under Section 4 of the Clayton Act (15 U.S.C. Sec. 15) or under the Cartwright Act (Chapter 2 [commencing with Section 16700] of Part 2 of Division 7 of the Business and Professions Code), arising from purchases of goods, services, or materials pursuant to the public works contract or subcontract. This assignment shall be made and become effective at the time the awarding body tenders final payment to the contractor, without further acknowledgement by the parties."

7-15 RECYCLABLE CONSTRUCTION & DEMOLITION WASTES. Ventura County Ordinance Code Section, 4421 et seq, requires that if any recyclable solid wastes or marketable reusable materials will be generated on the site of the Work within the unincorporated areas of Ventura County, the Contractor shall prepare a Construction & Demolition Debris Waste Diversion Plan and submit it to the Ventura County Public Works Agency, Water & Sanitation Department - Integrated Waste Management Division (IWMD). The Contractor shall prepare and file Construction & Demolition Debris Waste Diversion Reporting Forms as required by the IWMD.

For projects within the unincorporated areas of Ventura County, the Contractor shall submit an IWMD Form B-Recycling Plan approved by IWMD prior to issuance of the Notice to Proceed as provided in 6-7.4.

For projects within the unincorporated areas of Ventura County, the Contractor shall submit an IWMD Form C-Reporting Form approved by IWMD prior to the Engineer preparing the final estimate as provided in 9-3.2.

If the site of the Work is within an incorporated city, the Contractor shall comply with all the recycling, solid waste diversion, and hauling requirements of that incorporated city.

7-16 BLANK

7-17 LOSS OR DAMAGE TO THE WORK. The Contractor is responsible for delivering to the Agency Work completed in accordance with the Contract except as provided in 7-18. Should the Work being constructed be damaged by fire or other causes before Acceptance by the Agency, it shall be replaced in accordance with the requirements of the Plans and Specifications without additional expense to the Agency. The Agency does not carry "Course of Construction" insurance on the Work. Contractor should arrange for its own insurance to protect its interests.

7-18 ACTS OF GOD. As provided in Section 7105 of the California Public Contract Code, the Contractor shall not be responsible for the cost of repairing or restoring damaged portions of the Work determined to have been proximately caused by an act of God in excess of 5 percent of the contracted amount, provided that the Work damaged was built in accordance with accepted and applicable building standards and the Specifications and Drawings. The Contractor shall obtain insurance to indemnify the Agency for any damage to the Work caused by an act of God if the premium of said insurance coverage is called for as a separate bid item in the bidding schedule for the Work. For purposes of this section, the term "acts of God" shall include only the following occurrences or conditions and effects: earthquakes in excess of a magnitude of 3.5 on the Richter Scale, and tidal waves.

SECTION 8 - FACILITIES FOR AGENCY PERSONNEL

8-1 GENERAL. A field office shall be provided when required by the Plans or Special Provisions. The field office shall be at a suitable location approved by the Engineer.

A field office shall be a weather-tight building of suitable proportions with 16 m^2 (120 sq. ft.) of floor area, at least one door, and a window area of 2 m^2 (22 Sq. Ft.). A field office may be a building or a separate room in a building the Contractor may be required to provide or that it may desire to provide for its own use. In either case, the room shall have a separate exterior door. All doors shall be provided with hasps for padlocks.

The office shall be convenient to the Work. It shall be adequately heated, ventilated, electrically lighted, and provided with telephone service, all at the expense of the Contractor or plant owner. Offices are for the exclusive use of Agency personnel, unless otherwise provided herein.

Field offices at the worksite shall be removed upon completion of the Work.

All costs incurred in furnishing, maintaining, servicing, and removing a field office required at the Work site shall be included in the price bid for such item. If such item is required by the Plans or Specifications and no bid item is provided in the Proposal, the costs shall be absorbed in the other items for which bids are entered. Buildings and equipment furnished by the Contractor at the Work site under the provisions of this section are the property of the Contractor.

The first progress payment will not be approved until all facilities are in place and fully comply with the Specifications.

8-2 EQUIPMENT FOR FIELD OFFICES. Unless otherwise specified, a field office shall be equipped with:

Plan table, 0.75 m x 1.5 m (2 1/2 ft. x 5 ft.) or larger
Plan rack, capacity to hold two sets of project Plans plus all shop drawings
Desk and chair
Two lockers with hasps for padlocks

SECTION 9 - MEASUREMENT AND PAYMENT

9-1 MEASUREMENT OF QUANTITIES FOR UNIT PRICE WORK

9-1.1 General. Unless otherwise specified, quantities of work shall be determined from measurements or dimensions in horizontal planes. However, linear quantities of pipe, piling, fencing, and timber shall be considered as being the true length measured along longitudinal axis.

Unless otherwise provided in Specifications, volumetric quantities shall be the product of the mean area of vertical or horizontal sections and the intervening horizontal or vertical dimension. The planimeter shall be considered an instrument of precision adapted to measurement of all areas.

9-1.2 Methods of Measurement. Materials and items of Work which are to be paid for on the basis of measurement shall be measured in accordance with the methods stipulated in the particular sections involved.

9-1.3 Certified Weights. When payment is to be made on the basis of weight, the weighing shall be done on certified platform scales or, when approved by the Engineer, on a completely automated weighing and recording system. The Contractor shall furnish the Engineer with duplicate licensed weighmaster's certificates showing actual net weights. The Agency will accept the certificate as evidence of weights delivered.

9-1.4 Units of Measurement. Measurements shall be in accordance with 1-4.1 and 1-4.2. A metric ton or “tonne” is equal to 1000 kilograms and the unit of liquid measure is a Liter (in U.S. Standard Measures, a pound is an avoirdupois pound; a ton is 2000 pounds avoirdupois; and the unit of liquid measure is a gallon).

9-2 LUMP SUM BID ITEMS. Items for which quantities are indicated as "Lump Sum", "L.S." or "Job" shall be paid for at the price indicated in the Proposal. Such payment shall be full compensation for the items of Work and all Work appurtenant thereto.

When required by the Specifications or requested by the Engineer, the Contractor shall submit to the Engineer within 15 Days after award of Contract, a detailed schedule in triplicate, to be used only as a basis for determining progress payments on a lump sum contract or any designated lump sum bid item. This schedule should equal in total the lump sum bid and shall be in such form and sufficiently detailed as to satisfy the Engineer that it correctly represents a reasonable apportionment of the lump sum. If Mobilization or Water Pollution Control are included in the detailed schedule, those items will be paid for as provided in 9-3.4.2 and 7-8.6.4, receptively.

9-3 PAYMENT

9-3.1 General. The quantities listed in the Bid schedule will not govern final payment unless identified by Agency on the Proposal as [F]. The symbol "[F]" indicates that the quantities shown on the Proposal form are the final pay quantities. Payment to the Contractor (except those items identified as [F]) will be made only for the actual quantities of Contract items constructed in accordance with the Plans and Specifications. Upon completion of construction, if the actual quantities show either an increase or decrease from the quantities given in the Bid schedule, the Contract Unit Prices will prevail subject to the provisions of 3-2.2.1. Payment for those items identified as [F] will be based on the quantities shown on the Proposal unless changed as provided in 3-2.2.1.

The unit and lump sum prices to be paid shall be full compensation for the items of work and all appurtenant work, including furnishing all materials, labor, equipment, tools and incidentals.

Payment for items shown on the Plans or required by the Specifications, for which no pay item is provided, shall be considered included in the prices named for the other items shown on the Proposal.

Payment will not be made for materials wasted or disposed of in a manner not called for under the Contract. This includes rejected material not unloaded from vehicles, material rejected after it has been placed and material placed outside of the Plan lines. No compensation will be allowed for disposing of rejected or excess material.

Whenever any portion of the Work is performed by the Agency at the Contractor's request, the cost thereof shall be charged against the Contractor, and may be deducted from any amount due or becoming due from the Agency.

Whenever immediate action is required to prevent injury, death, or property damage, and precautions which are the Contractor's responsibility have not been taken and are not reasonably expected to be taken, the Agency may, after reasonable attempt to notify the Contractor, cause such precautions to be taken and shall charge the cost thereof against the Contractor, or may deduct such cost from any amount due or becoming due from the Agency. Agency action or inaction under such circumstances shall not be construed as relieving the Contractor or its Surety from liability.

9-3.1 General. (Continued)

Payment shall not relieve the Contractor from its obligations under the Contract; nor shall such payment be construed to be Acceptance of any of the Work. Payment shall not be construed as the transfer of ownership of any equipment or materials to the Agency. Responsibility of ownership shall remain with the Contractor who shall be obligated to store, protect, repair, replace, rebuild, or otherwise restore any fully or partially completed work or structure for which payment has been made; or replace any materials or equipment required to be provided under the Contract which may be damaged, lost, stolen or otherwise degraded in any way prior to completion of the Work under the Contract, except as provided in 6-10.

Warranty periods shall not be affected by any payment but shall commence on the date equipment or material is placed into service at the written direction of the Engineer. In the event such items are not placed into service prior to partial or final completion of the Work, the warranty periods will commence on the date set forth as the date of field completion in the Engineer's acknowledgement of completion.

If, within the time fixed by law, a properly executed notice to stop payment is filed with the Agency, due to the Contractor's failure to pay for labor or materials used in the Work, all money due for such labor or materials will be withheld from payment to the Contractor in accordance with applicable laws.

At the expiration of 35 Days from the date of recording of the Notice of Completion, or as prescribed by law, the amount deducted from the final estimate and retained by the Agency will be paid to the Contractor except such amounts as are required by law to be withheld by properly executed and filed notices to stop payment, or as may be authorized by the Contract to be further retained.

9-3.2 Partial and Final Payment. The Engineer will, after award of Contract, establish a closure date for the purpose of making monthly progress payments. The Contractor may request in writing that such monthly closure date be changed. The Engineer may approve such request when it is compatible with the Agency's payment procedure.

Each month, the Engineer will make an approximate measurement of the Work performed to the closure date and, as a basis for making monthly payments, estimate its value based on the Contract Unit Prices or as provided for in 9-2. When the Work has been satisfactorily completed, the Engineer will determine the quantity of Work performed and prepare the final estimate.

Work not conforming to the Contract Documents shall not be measured for payment.

Conformance with the Contract Documents shall be, in addition to constructing the Work in accordance with the Contract Documents, the Contractor's compliance with those portions of the Contract Documents not directly related to the completed Work, including but not limited to: construction and maintenance of detours; diversion and control of water; protection and repair of existing facilities of the Agency and adjacent owners; site maintenance; coordination with utilities and other contractors on the site; proper survey procedures and records; obtaining required permits and inspections; complying with working hour limitations; providing a Contractor's representative while Work is being performed; complying with environmental requirements; maintaining access and safety for users of facilities that are to remain in service during construction; and obeying all laws affecting the Work.

Payment for Extra Work will be made only on approved Daily Extra Work Reports with supporting documentation as required in 3-3.

From each progress estimate, 5 percent will be deducted and retained by the Agency, and the remainder less the amount of all previous payment will be paid to the Contractor.

No progress payment made to the Contractor or its sureties will constitute a waiver of the liquidated damages under 6-9.

9-3.2 Partial and Final Payment. (Continued)

As provided for in Sections 22300 of the California Public Contract Code, the Contractor may substitute securities for any monies withheld by the Agency to ensure performance under the Contract. In substituting securities, the Contractor may either:

a. Deposit qualifying securities already owned by the Contractor with the Escrow prior to the Contract payment date, or

b. Direct the Agency to send retained funds to the Escrow to be invested by the Escrow in qualifying securities as directed by the Contractor.

9-3.2.1 Release of Withheld Contract Funds. Pursuant to Public Contract Code Section 22300, Contractor has the option to deposit securities with an Escrow Agent as a substitute for retention earnings required to be withheld by Agency pursuant to the construction Contract between the Agency and the Contractor. A form of Escrow Agreement for Security Deposits in Lieu of Retention has been adopted by the Agency as one of the Contract Documents; procedures for implementing the provisions of the Escrow Agreement are contained in Escrow Instructions which shall become effective upon exercise of the option by the Contractor.

The Contractor shall take the following steps if it desires to substitute securities:

a. Execute the Escrow Agreement for Security Deposits in Lieu of Retention.
b. Furnish to the Escrow Agent a power of attorney and other forms necessary to empower the Escrow Agent to convert the securities to cash.
c. Furnish to the Escrow Agent the securities described.
d. Pay the Escrow Agent's fees and costs.

When the Contractor deposits with the Escrow Agent securities in lieu of money required to be withheld from progress payments, a sum of money equivalent to the current cash value of the securities as determined by the Escrow Agent shall be released to the Contractor by, or upon the direction of, the Agency.

If the total of the money plus the current cash conversion value of securities on deposit should fall below the aggregate amount of the sums required to be withheld from progress payments pursuant to 9-3.1 and 9-3.2, an amount equal to the difference shall be withheld from the next regular progress payment in addition to the amount which would ordinarily be withheld pursuant to 9-3.1 and 9-3.2. If the next regular progress payment is less than the total of the amounts to be withheld therefrom, the Contractor shall immediately either deposit with the Agency cash in the amount of the difference or deposit with the Escrow Agent additional securities having a current cash conversion value equal to or greater than the difference.

The Contractor shall be the beneficial owner of any such securities on deposit with the Escrow Agency and shall be entitled to any interest earned thereon prior to conversion. The Agency may direct the Escrow Agency to convert securities with the Escrow Agency into cash, and to deliver the cash to the Agency, in any case where the Contractor is in default, including the following:

a. where the Agency would be entitled to use funds withheld pursuant to 9-3.1 and 9-3.2 to satisfy claims of workers, materials suppliers or subcontractors, or to complete or correct work which the Contractor has failed or refused to complete or correct, or

b. where the Contractor has failed to comply with the requirements of this section respecting the deposit of additional cash or securities to make up for a fall in the value of securities already on deposit with the Escrow Agency.

The Agency may hold and use cash resulting from such a conversion of securities in the same manner as it would be entitled to hold and use funds withheld pursuant to 9-3.1 and 9-3.2.

9-3.2.2 Timely Progress Payments. As required by Public Contract Code Section 20104.50, the Contractor is informed that should a progress payment not be made within 30 Days after receipt of an undisputed and properly submitted payment request from the Contractor, the Agency shall pay interest to the Contractor on the unpaid amount at the rate set forth in the Code of Civil Procedures, Section 685.010(a). Agency shall promptly review payment requests, and if not determined to be proper, document to the Contractor, within 7 Days, the reasons why the request is not proper.

Contractor should refer to the code sections cited for further information.

9-3.3 Delivered Materials. Payment for the cost of materials and equipment delivered to the Work site but not incorporated in the Work will be included in the progress estimate if, prior to the closure date for the monthly progress payment, the material or equipment is listed by the Contractor on the Agency's form together with date of delivery, vendor's or Subcontractor's name and cost; is accompanied by a copy of an invoice showing the cost thereof; has an aggregate cost in excess of $5,000 for each progress payment; is currently on the Work site at an approved location and in good condition; and is one of the following:

1. Precast concrete units weighing more than 100 kilograms (200 pounds) each.
2. Structural steel members weighing more than 100 kilograms (200 pounds) each.
3. Individual pieces of electrical equipment costing over $1,000 each.
4. Individual pieces of mechanical equipment costing over $1,000 each.
5. Reinforced concrete pipe of any size.
6. Storm drainage pipe 900 mm (36") in diameter and larger.
7. Water and sewer pipe 300 mm (12") in diameter and larger.
8. Finish hardware for doors.
9. Other individual items of equipment costing over $1,000 each
10. Materials where the aggregate value of a single type of material exceeds $1,000 and is either:
    a) Fabricated or cut to fit the Work before delivery, or
    b) Of a size or type not available from any manufacturer without a special production run.

On unit price Bid items, the amount paid for materials or equipment delivered but not incorporated in the Work shall not exceed 75% of the amount of the Bid item which includes such material or equipment.

On lump sum Bid items, the amount paid for materials and equipment delivered and not incorporated in the Work shall not exceed 75% of the item in the approved schedule submitted in accordance with 9-2 of which such materials or equipment is a part.

Should materials or equipment previously paid for be damaged, destroyed, stolen or removed from the Work site, the payment previously made therefor will be deducted from the next progress payment, unless such materials or equipment are replaced prior thereto.

On the closure date for progress payments, as provided in 9-3.2, the Contractor shall certify that all materials and equipment not incorporated into the Work, for which payment has previously been made or is being requested, is still at the Work site and in good condition. Failure to provide such certification will be cause for deducting previous payments for materials not incorporated in the Work from the amount due the Contractor in the progress payment.

Payment for materials or equipment, as provided herein, shall not constitute approval or acceptance thereof nor shall such payment modify or abridge any of the rights the Agency has under the Specifications or at law nor relieve the Surety of any of its obligations under the bonds.

9-3.4 Mobilization

9-3.4.1 Scope. Mobilization includes preliminary services, work and operations, including but not limited to, furnishing required bonds, obtaining necessary permits and work areas, providing a specified field office, the movement of labor, supplies, equipment and incidentals to the Work site, and for all other work, services and operations which must be performed or for which costs are incurred prior to performing work of the other Contract items.

9-3.4.2 Payment. The Contract lump sum price bid for mobilization shall include full compensation for furnishing all labor, materials, tools, equipment, services and incidentals and for doing all work involved in mobilization as specified herein. Payment for mobilization will be made as the Work proceeds on the following basis except that where a field office is required by the Specifications, no payment for mobilization will be made until the specified field office has been provided:

Partial payment estimate (excluding mobilization & water pollution control payments) as a percentage of the original Contract price (excluding the mobilization & water pollution control Bid items).		Cumulative amount of mobilization pay item earned is the lesser of the amounts as computed by these two columns.	
Equal to or greater than	Less than	Percentage of mobilization pay item	Percentage of the original Contract total.
5	10	50	5
10	20	75	7.5
20	50	95	9.5
50	Completion of Work	100	10
Completion of Work		100	

Where no Bid item is provided for mobilization, payment for mobilization shall be considered to be included in the other Bid items.

9-4 TERMINATION OF AGENCY LIABILITY. After completion of all work required by the contract, Agency will furnish Contractor a Release on Contract form stating the amount of total authorized payments for the project. Contractor shall execute and return said form within 21 days of receipt. Said form shall release and discharge the Agency from all claims of and liability to the Contractor for all manner of debts, demands, accounts, claims, and causes of action under or by virtue of said Contract except:

a. The claim against the Agency for the remainder, if any, of the amounts retained as provided in 9-3.2, and any amounts retained as required by Stop Notices or Labor Code provisions.

b. Any unsettled claims or disputes listed on the Release on Contract form which has been processed in compliance with the requirements for making claims under the Contract, including given timely notice pursuant to the applicable provisions of the Contract and following the procedure set forth in 6-12.

Acceptance of the Release on Contract by the Agency shall not be deemed a waiver or release of the Agency's right to contest either the substantive or procedural validity of any listed unsettled claims or disputes.

When executing the Release on Contract, the Contractor shall certify that each unsettled claim or dispute listed thereon has been processed in compliance with the requirements for making claims under the Contract, including giving timely notice pursuant to the applicable provisions of the Contract and following the procedures for resolution of disputes or claims set forth in 6-12 and that acceptance of the Release on Contract by the Agency shall not be deemed a waiver or release of the Agency's right to contest either the substantive or procedural validity of any listed unsettled claims or disputes.

If Contractor fails to execute and submit a Release on Contract within the 21 day time period set forth above, the Release on Contract shall be deemed to have been submitted with no unsettled claims or disputes listed on the Release on Contract. A payment of $1.00 will be made to the Contractor for such Release on Contract and waiver.

SECTION 10 - DIVERSION, CONTROL AND REMOVAL OF WATER

10-1 DESCRIPTION. This section covers the diversion, control and removal of all water entering into the construction area or otherwise affecting construction activities.

10-2 REQUIREMENTS. All permanent construction shall be performed in a site free from water unless otherwise provided for in the Special Provisions. The Contractor shall construct, maintain, and operate all necessary cofferdams, pumps, channels, flumes, drains, well points and/or other temporary diversion, protective, and water removal works required for diversion, control and removal of all water, whether surface or groundwater, whatever its source, during construction.

Inundation of partially completed Work due to lack of control during non-working periods will not be permitted, and may be cause for requiring removal and replacement of Work already completed.

The Contractor shall be responsible for obtaining the use of any property in addition to that provided for in the Plans and Specifications, which may be required for the diversion, protective, and water removal works so as not to create a hazard to persons or property or to interfere with the water rights of others.

It shall be understood and agreed that the Contractor shall hold the Agency and the Engineer harmless from legal action taken by any third party with respect to construction and operations of the diversion and protective works.

10-3 DIVERSION AND CONTROL WORKS.

Prior to beginning of work involving diversion, control and removal of water, the Contractor shall submit a water control plan to the Engineer. In the event circumstances during the course of construction require changes to the original water control plan, a revised water control plan shall be promptly submitted to the Engineer in each instance. No responsibility shall accrue to the Engineer or the Agency as a result of the plan or as a result of knowledge of the plan.

Construction and operation of the diversion, control and removal works shall be in accordance with the water control plan submitted, except deviations therefrom may be specifically approved by the Engineer.

All works installed by the Contractor in connection with dewatering, control, and diversion of water but not specified to become a permanent part of the Work, shall be removed and the site restored, insofar as practical, to its original condition prior to completion of construction or when directed by the Engineer.

10-4 PAYMENT. No separate Bid item is included. Payment for this item of Work will be considered to be included in the payments made for other items of Contract Work to which water control is incidental.

200-1 ROCK PRODUCTS

200-1.6 Stone for Riprap

200-1.6.1A Alternate Stone for Riprap. As an alternate to the requirements of Subsection 200-1.6, the sample may be subject to the following tests:

TESTS	TEST METHOD NO.	REQUIREMENTS
Apparent Specific Gravity	ASTM C 127	2.40 Min.
Resistance to Abrasion	ASTM C 535, Grading 1	35% Max.
Soundness	Section 211-8	10% Max.
Wet and Dry Loss	Section 211-9	5% Max.
Solubility	Section 211-10	No Loss

All rock shall be angular or subangular in shape. Angular shall be defined as having sharp corners and straight planes on all faces, with no evidence of wear caused by wind, water or abrasion. Subangular shall be defined the same as angular except that evidence of wear by wind, water or abrasion may be allowed. Determination of angularity will be made by the Engineer.

200-1.6.2 Riprap Size

The individual classes of rock used for riprap shall conform to the following:

Rock Sizes	RIPRAP CLASSES					
	1-Tonne (1-Ton)	½-Tonne (½-Ton)	¼-Tonne (¼-Ton)	Light	Facing	Cobble
	PERCENTAGE LARGER THAN					
2-Tonne (2-Ton)	0-5					
1-Tonne (1-Ton)	50-100	0-5				
½-Tonne (½-Ton)		50-100	0-5			
¼-Tonne (¼-Ton)	90-100		50-100	0-5		
100-kg (200-lb)		90-100		50-100	0-5	
35-kg (75-lb)			90-100	90-100	50-100	0-5
10-kg (25-lb)					90-100	95-100
0.5-kg (1-lb)	100	100	100	100	100	100

The amount of material smaller than the smallest size listed in the table for any class of riprap shall not exceed the percentage limit listed in the table determined on a weight basis.

Compliance with the percentage limit shown in the table for all other sizes of the individual pieces of any class of riprap shall be determined by the ratio of the number of individual pieces larger than the specified size compared to the total number of individual pieces larger than the smallest size listed in the table for that class.

Flat or needle shapes will not be accepted unless the thickness of individual pieces is greater than 1/3 the length.

Before placing in final location, depositing, or stockpiling within the project limits, each individual load of riprap must meet the size requirements of the class specified.

SECTION 206 - MISCELLANEOUS METAL ITEMS

206-3 GRAY IRON AND DUCTILE IRON CASTINGS

206-3.3.2A Manhole Frame and Cover Sets

Unless otherwise specified, manhole frames and covers shall be in accordance with the following Standard Plans contained in the SPPWC:

Clear Opening Diameter mm (Inches)	SPPWC Plan No.	Catalog Numbers	
		Alhambra Foundry	Long Beach Iron Works
600 (24)	630-1	A-1495	X-162
675 (27)	631-1	A-1496	X-164
750 (30)	632-1	A-1497	X-163
900 (36)	633-1	A-1498	X-106A

206-5 METAL RAILINGS.

206-5.2 Flexible Metal Guard Rail Materials.

206-5.2A Flexible Metal Guard Rail Materials; Modification. The "Construction" grade Douglas Fir for "posts, including blocks" does not have to be "free of heart center".

SECTION 210 - PAINT AND PROTECTIVE COATINGS

210-6 STORM DRAIN HARDWARE. All storm drain hardware, including manhole frames and covers, grates, protection bars, steps, etc., shall be protected from corrosion.

Storm drain hardware made of cast iron shall be protected by painting with, or dipping in, a commercial grade asphalt paint. Storm drain hardware made of steel shall be galvanized.

211-6 SIEVE ANALYSIS. Sieve analysis shall be performed in accordance with ASTM C136.

211-7 Sand Equivalent Test. This test is intended to serve as a field test to indicate the presence or absence of plastic fine material. The test shall be run in accordance with Calif. test 217 or ASTM D2419. When testing material containing asphalt, this test method shall be modified by drying the sample at a temperature not exceeding 38°C (100°F).

211-8 R-VALUE. Resistance (R-value) shall be determined by California Test 301.

211-9 SPECIFIC GRAVITY AND ABSORPTION. Apparent specific gravity, bulk specific gravity and absorption shall be determined by California Test 206, 207, 208, 209, 224, 225, or 308, Method C where zinc stearate may be substituted for paraffin.

211-10 LOS ANGELES RATTLER TEST. Loss in Los Angeles Rattler shall be determined by California Test 211.

211-11 SOUNDNESS. For riprap, the soundness shall be determined in accordance with Calif. Test 214, excluding sections D, E, G.2.b, and H, and adding the following:

a. The test sample shall be prepared by breaking or sawing a representative sampling of riprap into particles passing the 75 mm (three inch) and retained on the 50 mm (two inch) sieve. If there are a variety of rock types or degrees of weathering within a rock type, each unique type or condition must meet the loss requirement.

b. The test sample size shall be 25,000 grams (55 lbs.) ± 1 percent.

c. All particles of test sample which break into three or more pieces during testing shall be discarded. The remaining sample shall be washed on a 4.75 mm (#4) sieve and all particles retained shall be oven dried.

d. The loss in weight shall be determined by subtracting from the original weight of the test sample the final weight of all particles retained on the 4.75 mm (#4) sieve. Divide the loss in weight by the original weight and multiply by 100 to determine the percent loss.

e. Report the following:

   (1) The percent loss.

   (2) The number of pieces affected, classified as to number disintegrating, splitting, crumbling, cracking, flaking, etc.

211-12 WET AND DRY LOSS. Wet and dry loss shall be determined as follows:

A sample of rock shall be crushed, screened, oven dried, and 1,000 g (2.2 lbs.) to 1,500 g (3.3 lbs.) of the 19 mm (3/4 inch) to 9.5 mm (3/8 inch) fraction shall be taken for the test.

The crushed and graded sample shall be submerged in tap water for 8 hours at room temperature, after which the sample shall be drained and oven dried at 78°C (140°F). When dry, the sample shall be cooled to room temperature. This completes one cycle.

After 10 cycles, the percent loss shall be computed as follows:

$$\% \text{ Loss} = \frac{100 \times \text{Weight of Material Passing 4.75 mm (No. 4) Sieve}}{\text{Total Weight of Sample}}$$

211-13 SOLUBILITY. Approximately 0.5 kg (one pound), air dried samples shall be immersed in local tap water and in Pacific Ocean water (or a 3.5% sodium chloride solution) for 8 hours each at 78°C (140°F). After immersion, the samples shall be washed with tap water, air dried and reweighed.

211-14 Permeability Test. Permeability tests for granular soils shall be performed in accordance with ASTM D2434, using samples compacted to the specified field density.

PART 3 CONSTRUCTION METHODS

SECTION 301 - TREATED SOILS, SUBGRADE PREPARATION AND PLACEMENT OF BASE MATERIALS

301-1 SUBGRADE PREPARATION

301-1.3 Relative Compaction

301-1.3.1 Firm, Hard and Unyielding. The term "firm, hard and unyielding" as used in 301-1.3 shall mean that when the heaviest construction and hauling equipment used on the Work drives over the subgrade, no permanent deformation shall occur either before or during pavement construction.

301-1.4 Subgrade Tolerances. Subgrade for pavement, sidewalk, curb and gutter, driveways, or other roadway structures shall not vary more than 15 mm (0.05 feet) from the specified grade and cross section. Subgrade for subbase or base material shall not vary more than 15 mm (0.05 feet) from the specified grade and cross section.

Variations within the above specified tolerances shall be compensating so that the average grade and cross section specified are met.

301-2 UNTREATED BASE

301-2.3 Compacting

301-2.3.1 Tolerances. The tolerance requirement in 301-2.3 is modified from 6 mm (0.02 foot) to 15 mm (0.05 foot).

SECTION 302 - ROADWAY SURFACING

302-5 ASPHALT CONCRETE PAVEMENT

302-5.1 General

302-5.1.1 Asphalt Concrete Berms. Asphalt concrete berms shall be constructed of Class III-D-PG70-10 asphalt concrete by mechanical means to conform to the details and location as shown on the Plans.

A tack coat, as provided in 302-5.4, shall be applied to the existing or new pavement preceding the placement of the asphalt concrete berms.

302-5.4 Tack Coat

302-5.4.1 Fog Seal. When specified, a fog seal consisting of material meeting the requirements of 203-3 shall be applied to the surfaces of all completed asphalt concrete at the rate of 0.36 liter per square meter (0.08 gallon per square yard) of the combined emulsion or such lesser rate ordered by the Engineer. Surface to be sealed shall be free from dust, dirt, and other foreign material. Surface shall be sealed within 7 Days after paving.

302-5.9 Measurement and Payment

302-5.9.1 Measurement and Payment for Asphalt Berm. Asphalt concrete berms will be paid for at the Contract Unit Price per linear meter (feet) of berm in place. No separate measurement or payment will be made for asphalt, aggregate, or tack coat.

302-5.9.2 Measurement and Payment for Fog Seal, Tack Coat, and Prime Coat. Measurement and payment for the specified material shall be by the tonne (ton) in place. Emulsions shall be measured after the specified dilution has been made.

SECTION 303 - CONCRETE AND MASONRY CONSTRUCTION

303-5 CONCRETE CURBS, WALKS, GUTTERS, CROSS GUTTERS, ALLEY INTERSECTIONS, ACCESS RAMPS AND DRIVEWAYS

303-5.1 Requirements

303-5.1.4 Concrete Substitution. Class 280-C-14 (470-C-2000) may be used in lieu of Class 310-C-17 (520-C-2500) and Class 280-D-14 (470-D-2000) in lieu of Class 310-D-17 (520-D-2500) as specified in 201-1.1.2 for street surface improvements, excluding concrete pavement, when no class is specified on the Plans or in the Special Provisions.

SECTION 306 - UNDERGROUND CONDUIT CONSTRUCTION

306-1 OPEN TRENCH OPERATIONS

306-1.2 Installation of Pipe

306-1.2.1 Bedding

306-1.2.1.1 Bedding Material. When native material is allowed for backfill in the bedding zone, no rocks larger than 40 mm (1½") in maximum dimensions shall be included. Material containing ashes, cinders, and types of refuse or other deleterious material shall not be used as bedding.

306-1.2.1.2 Sewer Pipe Bedding. Bedding for sewer pipe from 100 mm (4") below the pipe to the spring line (horizontal diameter) of the pipe shall be free draining, granular material with a maximum size of 15 mm (1/2 inch), unless another bedding method is shown on the Plans.

Densification of the bedding material may be by the application of water or by mechanical means. Unless otherwise specified, all bedding material shall be densified to a relative density of 90%. Acceptability of densification in the bedding zone will be determined by visual inspection and probing to determine that no voids exist in the backfill material. In this paragraph, the word "voids" does not include intergranular voids in the soil structure.

306-1.2.1.3 Flexible Pipe Bedding. Bedding for flexible drainage and sewer pipe shall be granular material having a sand equivalent of at least 50. The bedding material shall be placed and compacted from 150 mm (six inches) below the pipe to the top of the bedding as defined in 306-1.2.1. A 1 m (three foot) long section of low permeability material (50% passing 75 μm (200) sieve) shall be installed and mechanically compacted in lieu of the above specified bedding material at intervals of 60 m (200 feet) or as otherwise indicated on the Plans.

306-9 DISINFECTION. All water mains and appurtenances shall be disinfected before being placed in service in accordance with AWWA C651 except as specified herein:

a. The water mains shall be chlorinated so that a chlorine residual of not less than 20 ppm remains in the water after standing in the pipe for 24 hours.

b. The Agency will perform sampling and testing of bacteriologic samples. Disinfection shall be repeated until two or more consecutive samples are negative for coliform organisms.

The pressure in the line being chlorinated shall be maintained at least 35 kPa (5 psi) lower than that existing in any Agency line to which it is connected.

306-10 WATERWORKS APPURTENANCES

306-10.1 Valves. Valves shall be located as shown on the drawings.

Each valve shall be operated prior to its installation to assure proper functioning. Valves shall be installed plumb and in alignment with the water main. Valves shall be anchored by metal ties to a concrete base. Line valves may be moved to the closest joint upon approval of the Engineer.

306-10.2 Valve Boxes. Each underground valve shall be provided with a valve box. The valve boxes shall be installed plumb and centered over the operating nut of the valve. Valve boxes shall be installed with concrete collars.

Where valve boxes are to be placed in asphaltic type pavement, they shall not be set to grade until after paving has been completed.

Where valve boxes are to be placed in concrete pavement, they shall be set to grade prior to paving operations.

306-10.3 Thrust Devices. A reaction or thrust device shall be provided on all dead ends, tees, elbows, and bends with more than 5 degrees deflection on pressure pipe lines.

Thrust devices shall be cast-in-place concrete, poured against undisturbed or compacted earth. Thrust devices shall be sized and constructed in accordance with the Plans.

Thrust devices and anchor blocks shall be constructed of Class 280-C-14 (420-C-2000) concrete. Thrust devices and anchor blocks shall be cured at least 7 Days where Type IP or II cement is used or at least 48 hours where Type III cement is used.

Metal tie-rods or clamps shall be of adequate strength to prevent movement of pipe. All metal shall be coated in accordance with AWWA C110.

306-10.4 Fire Hydrants. Fire Hydrants shall be installed as shown on the Plans.

All hydrants shall stand plumb and shall have their nozzles parallel with or at right angles to the curb, with the pumper nozzle facing the curb, except that hydrants having only two hose nozzles 90 degrees apart shall be set with each nozzle facing the curb at an angle of 45 degrees.

In uncurbed public road rights of way, fire hydrants shall be located as far as possible from the traveled way while providing a 1 m (3-foot) wide clear space between the fire hydrant and the right of way line. In curbed public road rights of way, fire hydrants shall be installed so that there is 300 mm (12 inches) clear between the face of curb and the fire hydrant.

306-10.5 Fire Hydrant Barricades. Fire hydrant barricades shall consist of 100 mm (4-inch) standard steel pipe, schedule 40, filled with concrete, and having a total length of 2 m (72 inches). They shall be embedded in concrete blocks 300 mm (12 inches) in diameter and 1000 mm (40 inches) deep below ground surface with the barricade pipe embedded to 100 mm (4 inches) above the bottom of the concrete so 1 m (36 inches) extends above ground surface. The steel pipe above ground shall be painted chrome yellow in accordance with AWWA C503.

Barricades shall be installed between the fire hydrant and vehicle traffic paths at locations indicated on the Plans or where required by the water purveyor or Fire Department. Barricades shall not be installed within public road rights of way.

Fire hydrant barricades shall not obstruct the hydrant outlets.

310-5 Painting Various Surfaces

310-5.6 Painting Traffic Striping, Pavement Markings, and Curb Markings.

310-5.6.8A Application of Paint - Two Coats All painted traffic striping and markings shall be applied in two coats. The price named in any Bid item for painting traffic striping and markings shall include all costs for both applications, including any delays entailed for the required drying time between applications. If bleeding, curling or discoloration occurs following application of the second coat, unsatisfactory areas shall be given an additional coat, or coats, of paint. No additional payment will be made for work necessary to correct bleeding, curling or discoloration.

PART 4

SECTION 400 - ALTERNATE ROCK PRODUCTS, ASPHALT CONCRETE, PORTLAND CEMENT CONCRETE AND UNTREATED BASE MATERIAL

400-1 Rock Products

400-1.1 Requirements

400-1.1.1 General

Alternate rock material, Type S, as specified in Section 400 may be used on the Work.

400-3 Portland Cement Concrete

Suppliers of portland cement concrete shall file mix designs as required by 400-1.1.2

400-4 Asphalt Concrete

Suppliers of asphaltic cement concrete shall file mix designs as required by 400-1.1.2

ACORD®

CERTIFICATE OF LIABILITY INSURANCE

DATE (MM/DD/YYYY)

THIS CERTIFICATE IS ISSUED AS A MATTER OF INFORMATION ONLY AND CONFERS NO RIGHTS UPON THE CERTIFICATE HOLDER. THIS CERTIFICATE DOES NOT AFFIRMATIVELY OR NEGATIVELY AMEND, EXTEND OR ALTER THE COVERAGE AFFORDED BY THE POLICIES BELOW. THIS CERTIFICATE OF INSURANCE DOES NOT CONSTITUTE A CONTRACT BETWEEN THE ISSUING INSURER(S), AUTHORIZED REPRESENTATIVE OR PRODUCER, AND THE CERTIFICATE HOLDER.

IMPORTANT: If the certificate holder is an ADDITIONAL INSURED, the policy(ies) must be endorsed. If SUBROGATION IS WAIVED, subject to the terms and conditions of the policy, certain policies may require an endorsement. A statement on this certificate does not confer rights to the certificate holder in lieu of such endorsement(s).

PRODUCER	CONTACT NAME:	
	PHONE (A/C, No, Ext): / FAX (A/C, No):	
	E-MAIL ADDRESS:	
	INSURER(S) AFFORDING COVERAGE	NAIC #
INSURED	INSURER A :	
	INSURER B :	
	INSURER C :	
	INSURER D :	
	INSURER E :	
	INSURER F :	

COVERAGES **CERTIFICATE NUMBER:** **REVISION NUMBER:**

THIS IS TO CERTIFY THAT THE POLICIES OF INSURANCE LISTED BELOW HAVE BEEN ISSUED TO THE INSURED NAMED ABOVE FOR THE POLICY PERIOD INDICATED. NOTWITHSTANDING ANY REQUIREMENT, TERM OR CONDITION OF ANY CONTRACT OR OTHER DOCUMENT WITH RESPECT TO WHICH THIS CERTIFICATE MAY BE ISSUED OR MAY PERTAIN, THE INSURANCE AFFORDED BY THE POLICIES DESCRIBED HEREIN IS SUBJECT TO ALL THE TERMS, EXCLUSIONS AND CONDITIONS OF SUCH POLICIES. LIMITS SHOWN MAY HAVE BEEN REDUCED BY PAID CLAIMS.

INSR LTR	TYPE OF INSURANCE	ADDL INSR	SUBR WVD	POLICY NUMBER	POLICY EFF (MM/DD/YYYY)	POLICY EXP (MM/DD/YYYY)	LIMITS	
	GENERAL LIABILITY						EACH OCCURRENCE	$ See VCSS 7-4.2
	X COMMERCIAL GENERAL LIABILITY						DAMAGE TO RENTED PREMISES (Ea occurrence)	$
	CLAIMS-MADE X OCCUR						MED EXP (Any one person)	$
							PERSONAL & ADV INJURY	$
							GENERAL AGGREGATE	$ See VCSS 7-4.2
	GEN'L AGGREGATE LIMIT APPLIES PER:						PRODUCTS - COMP/OP AGG	$
	X POLICY PRO-JECT LOC							$
	AUTOMOBILE LIABILITY						COMBINED SINGLE LIMIT (Ea accident)	$ 1,000,000
	X ANY AUTO						BODILY INJURY (Per person)	$
	ALL OWNED AUTOS / SCHEDULED AUTOS						BODILY INJURY (Per accident)	$ 1,000,000
	HIRED AUTOS / NON-OWNED AUTOS						PROPERTY DAMAGE (Per accident)	$ 1,000,000
								$
	UMBRELLA LIAB X OCCUR						EACH OCCURRENCE	$
	EXCESS LIAB CLAIMS-MADE						AGGREGATE	$
	DED RETENTION $							$
	WORKERS COMPENSATION AND EMPLOYERS' LIABILITY Y / N						WC STATU-TORY LIMITS / OTH-ER	
	ANY PROPRIETOR/PARTNER/EXECUTIVE OFFICE/MEMBER EXCLUDED? (Mandatory in NH)	N / A					E.L. EACH ACCIDENT	$
	If yes, describe under DESCRIPTION OF OPERATIONS below						E.L. DISEASE - EA EMPLOYEE	$
							E.L. DISEASE - POLICY LIMIT	$

DESCRIPTION OF OPERATIONS / LOCATIONS / VEHICLES (Attach ACORD 101, Additional Remarks Schedule, if more space is required)

(Agency) - (Project Name) (Project Specification number)

The Agency and the County of Ventura, including its boards, all special Districts governed by the Board of Supervisors, agencies, departments, officers, consultants, employees, agents and volunteers, is named as Additional Insured as respects work done by Contractor under the terms of the contract on General Liability and Auto Liability Policies. Waiver of Subrogation is applicable to the Agency and the County of Ventura, its boards, districts, agencies, departments, officers, employees, agents and volunteers for Work Comp and General Liability. Endorsements required for referenced contract will be issued by the Insurance Company.

CERTIFICATE HOLDER

County of Ventura
Public Works Agency L-1670
800 S. Victoria Avenue
Ventura, CA 93009-1670

CANCELLATION

SHOULD ANY OF THE ABOVE DESCRIBED POLICIES BE CANCELLED BEFORE THE EXPIRATION DATE THEREOF, NOTICE WILL BE DELIVERED IN ACCORDANCE WITH THE POLICY PROVISIONS.

AUTHORIZED REPRESENTATIVE

© 1988-2010 ACORD CORPORATION. All rights reserved.

ACORD 25 (2010/05) **The ACORD name and logo are registered marks of ACORD**

Project: **Contractor:** **Specification No:**

Item No.	Work or Material	WORKING DAYS OF CONSTRUCTION CONTRACT TIME																					
		BEGINNING OF CONTRACT TIME																					

EACH HORIZONITAL INTERVAL EQUALS ____ WORKING DAYS OF CONTRACT TIME

Submitted _____ Contractor

By _____ Date

Title _____

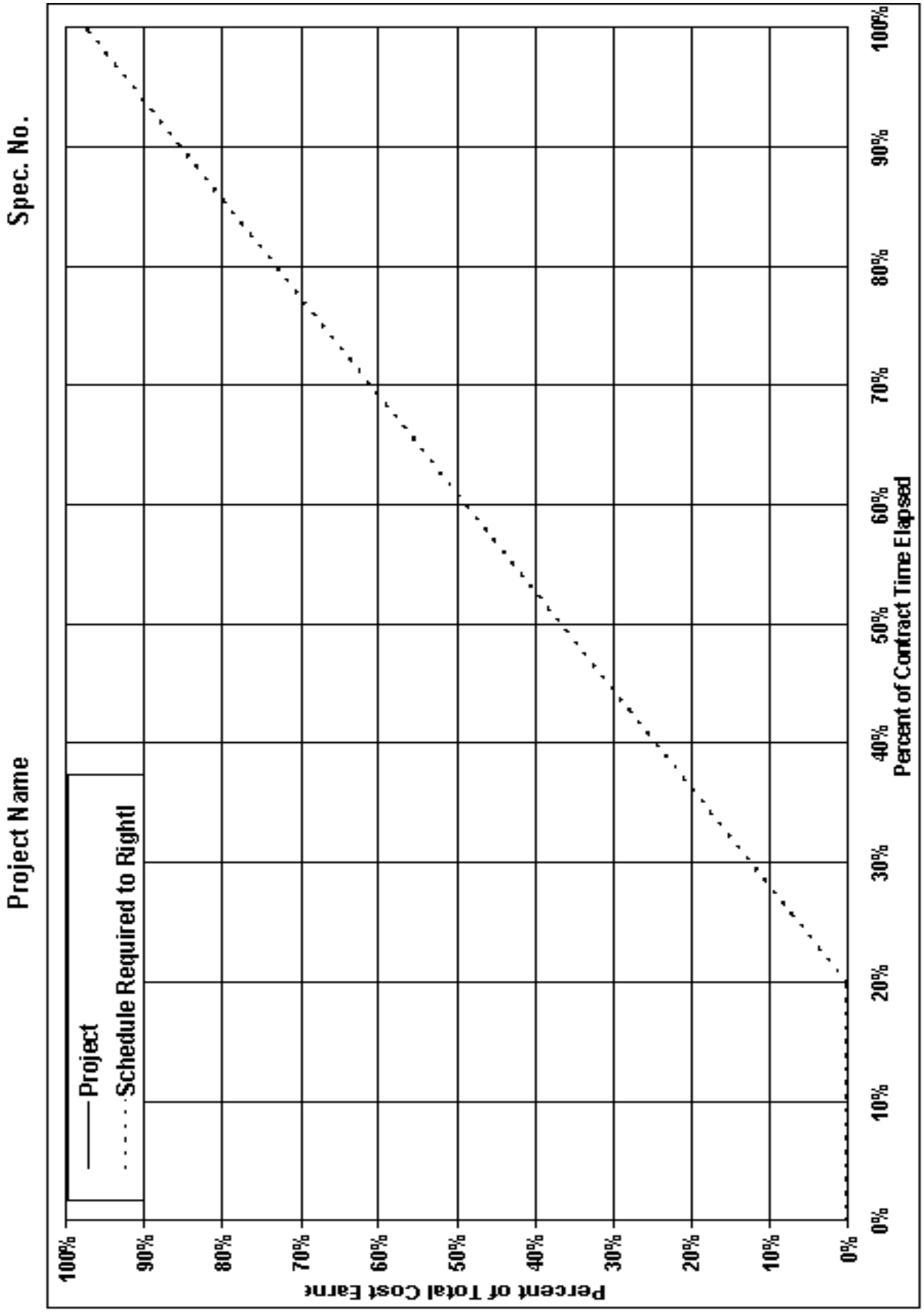
Project Name
Spec. No.
Project
Schedule Required to Right!
Percent of Total Cost Earne
100%
90%
80%
70%
60%
50%
40%
30%
20%
10%
0%
0%
10%
20%
30%
40%
50%
60%
70%
80%
90%
100%
Percent of Contract Time Elapsed

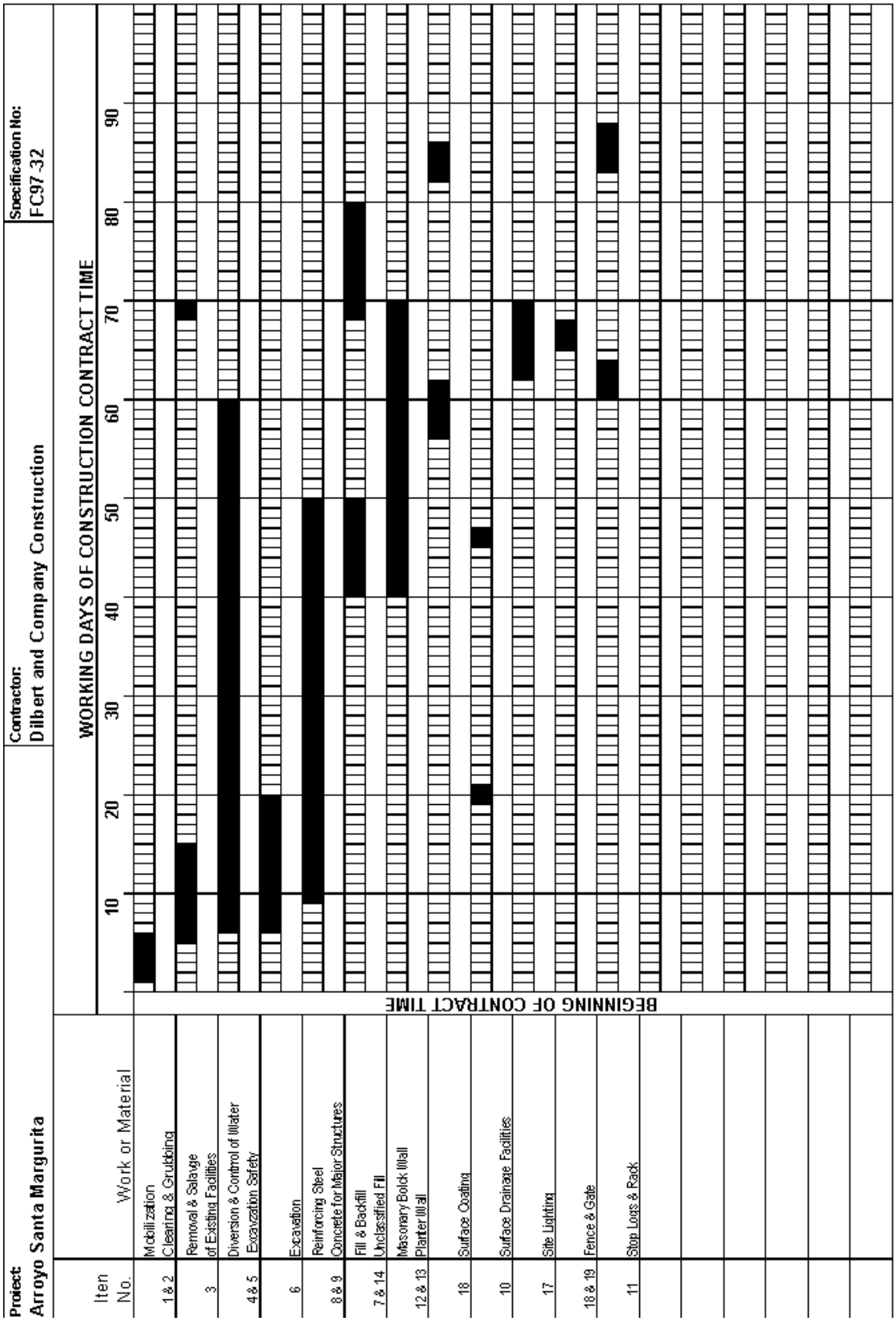
Project:
Arroyo Santa Margurita
Contractor:
Dilbert and Company Construction
Specification No:
FC97-32
Item No.
Work or Material
Mobilization
1 & 2
Clearing & Grubbing
Removal & Salvage
3
of Existing Facilities
Diversion & Control of Water
4 & 5
Excavation Safety
6
Excavation
Reinforcing Steel
8 & 9
Concrete for Major Structures
Fill & Backfill
7 & 14
Unclassified Fill
Masonary Block Wall
12 & 13
Planter Wall
18
Surface Coating
10
Surface Drainage Facilities
17
Site Lighting
18 & 19
Fence & Gate
11
Stop Logs & Rack
WORKING DAYS OF CONSTRUCTION CONTRACT TIME
10
20
30
40
50
60
70
80
90
BEGINNING OF CONTRACT TIME
EACH HORIZONITAL INTERVAL EQUALS 1 WORKING DAYS OF CONTRACT TIME
Submitted Dilbert and Company Construction
Contractor
By Tina Blair
5/22/97
Date
Title President

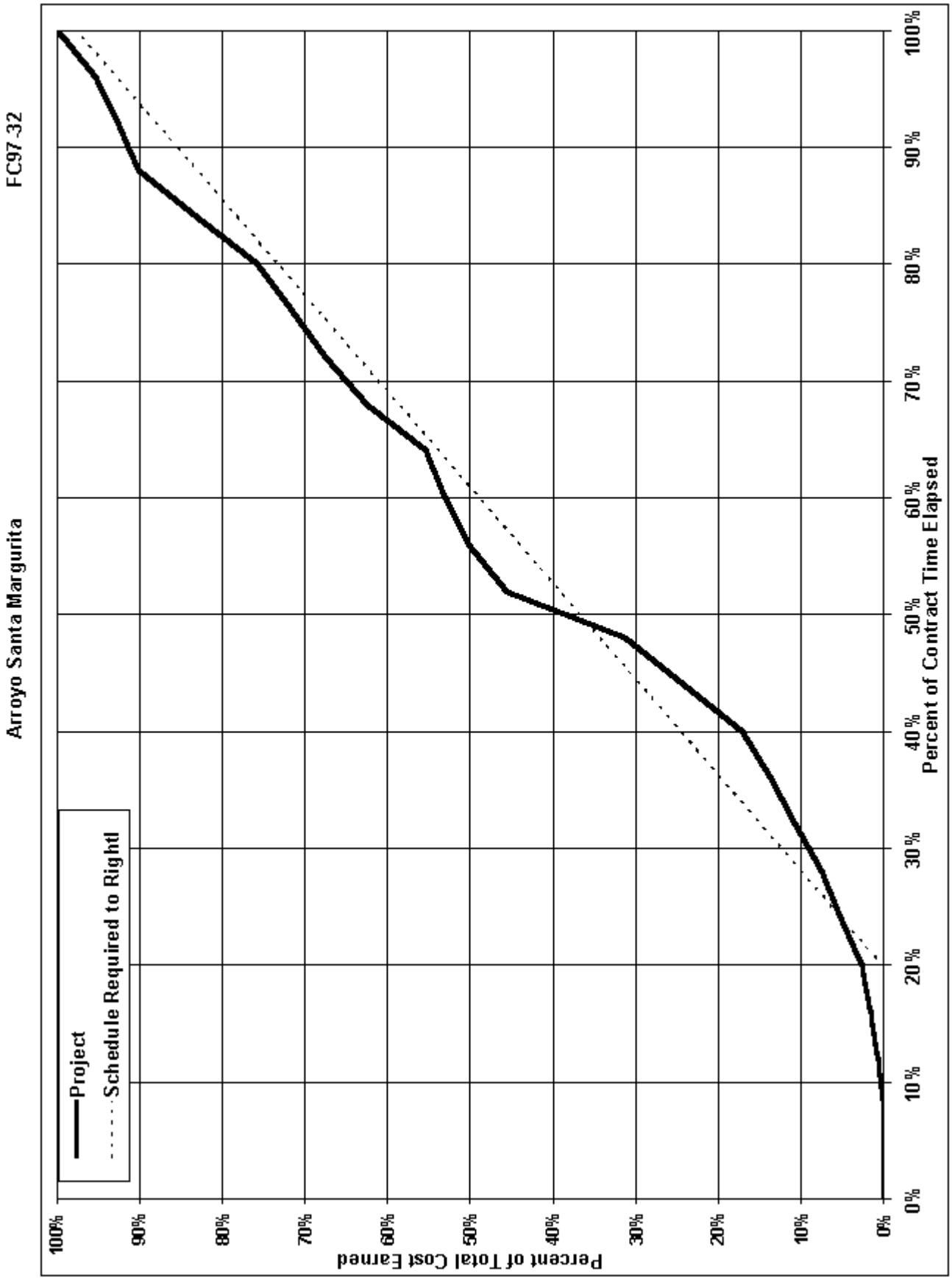
Arroyo Santa Margurita
FC97-32
Project
Schedule Required to Right
Percent of Total Cost Earned
100%
90%
80%
70%
60%
50%
40%
30%
20%
10%
0%
0 %
10 %
20 %
30 %
40 %
50 %
60 %
70 %
80 %
90 %
100 %
Percent of Contract Time Elapsed

ESCROW AGREEMENT FOR
SECURITY DEPOSITS IN LIEU OF RETENTION

This Escrow Agreement is made and entered into by and between
("Agency") whose address is _____ and
("Contractor") whose address is _____ and
("Escrow Agent") whose address is _____.

For the consideration hereinafter set forth, the Agency, Contractor and Escrow Agent agree as follows:

(1) Pursuant to Section 22300 of the Public Contract Code of the State of California, Contractor has the option to deposit securities with Escrow Agent as a substitute for retention earnings required to be withheld by Agency pursuant to the Construction Contract entered into between the Agency and Contractor for _____ in the amount of dated _____, (hereinafter referred to as the "Contract") which Contract is identified by Spec. No._____ and Auditor Controller's Contract No._____. Alternatively , on written request of the Contractor, the Agency shall make payments of the retention earnings directly to the Escrow Agent. When Contractor deposits the securities as a substitute for Contract earnings, the Escrow Agent shall notify the Agency within ten days of the deposit. The market value of the securities at the time of the substitution shall be at least equal to the cash amount then required to be withheld as retention under the terms of the Contract between the Agency and Contractor. Securities shall be held in the name of _____ , and shall designate the Contractor as the beneficial owner.

(2) The Agency shall make progress payments to the Contractor for those funds which otherwise would be withheld from progress payments pursuant to the Contract provisions, provided that the Escrow Agent holds securities in the form and amount specified above.

(3) When the Agency makes payments of retentions earned directly to Escrow Agent, the Escrow Agent shall hold them for the benefit of the Contractor until such time as the escrow created under this contract is terminated. The Contractor may direct the investment of the payments into securities. All terms and conditions of this agreement and the rights and responsibilities of the parties shall be equally applicable and binding when the Agency pays the Escrow Agent directly.

(4) Contractor shall be responsible for paying all fees for the expenses incurred by Escrow Agent in administering the escrow account. These expenses and payment terms shall be determined by the Agency, Contractor and Escrow Agent.

(5) The interest earned on the securities or the money market accounts held in escrow and all interest earned on that interest shall be for the sole account of Contractor and shall be subject to withdrawal by Contractor at any time and from time to time without notice to the Agency.

(6) Contractor shall have the right to withdraw all or any part of the principal in the Escrow Account only by written notice to Escrow Agent accompanied by written authorization from Agency to the Escrow Agent that Agency consents to the withdrawal of the amount sought to be withdrawn by Contractor.

(7) The Agency shall have a right to draw upon the securities in the event of default by the Contractor. Upon seven days' written notice to the Escrow Agent from the Agency of the default, the Escrow Agent shall immediately convert the securities to cash and shall distribute the cash as instructed by the Agency.

(8) Upon receipt of written notification from the Agency certifying that the Contract is final and complete, and that the Contractor has complied with all requirements and procedures applicable to the Contract, the Escrow Agent shall release to the Contractor all securities and interest on deposit less escrow fees and charges of the Escrow Account. The escrow shall be closed immediately upon disbursement of all moneys and securities on deposit and payments of fees and charges.

(9) Escrow Agent shall rely on the written notifications from the Agency and the Contractor pursuant to Sections (1) to (8), inclusive, of this Agreement and the Agency and Contractor shall hold Escrow Agent harmless from Escrow Agent's release and disbursement of the securities and interest as set forth above.

(10) The names of the persons who are authorized to give written notice or to receive written notice on behalf of the Agency and on behalf of Contractor in connection with the foregoing, and exemplars of their respective signatures are as follows:

On behalf of Agency:

_____, Director,
Public Works Agency

_____, Director
Central Services Department

_____, Director
Engineering Services Department

Address for all of the above:
Public Works Agency
800 South Victoria Avenue
Ventura, CA 93009

SAMPLE FORM

Form used for escrow will have names and signatures of persons authorized in accordance with paragraph 10.

On behalf of Contractor:

Title

Name

Signature

Street Address

City & State Zip Code

On behalf of Escrow Agent:

Title

Name

Signature

Street Address

City & State Zip Code

At the time the Escrow Account is opened, the Agency and Contractor shall deliver to the Escrow Agent a fully executed counterpart of this Agreement.

IN WITNESS WHEREOF, the parties have executed this Agreement by their proper officers on the date first set forth above.

Agency:
(Agency name)

Title

Name

Signature

Contractor:
(Contractor company name)

Title

Name

Signature

EXHIBIT "A"
ESCROW INSTRUCTIONS

The parties to this escrow are _____("Agency") and _____ ("Contractor") and _____("Escrow Agent"). Agency and Contractor have entered into a contract for the construction of _____which contract is identified by Spec. No. _____ and Auditor-Controller's Contract No. _____ and was entered into by and between Agency and Contractor ("Construction Contract"). Pursuant to Public Contract Code Section 22300, Contractor may substitute certain securities for an equivalent amount of money required to be withheld from progress payments by Agency to Contractor pursuant to the Construction Contract.

The Escrow Agent is hereby instructed as follows:

1. Contractor may deliver to Escrow Agent:
   (a) Securities of the types specified in Sections 22300 of the Public Contract Code and Section 16430 of the Government Code.
   (b) Such other documents as are necessary to enable Escrow Agent to convert such securities into cash.
2. Upon receipt of such securities and other documents, Escrow Agent shall notify Agency within ten days of the deposit, and shall examine them to determine whether they are in a form sufficient to effect conversion of the securities into cash. Escrow Agent shall thereupon send written notice of its determination to Agency.
3. Escrow Agent shall hold such securities as trustee for Agency. The right of Agency to such securities is superior to any other lien or claim of lien; provided, however, that Contractor shall be entitled to any interest earned by such securities prior to their conversion to cash pursuant to section 5 hereof, and further provided that such interest may be withdrawn by Contractor at any time and from time to time without notice to Agency.

   Securities may be substituted by Contractor, but any securities substituted for securities previously deposited shall not reduce the current cash value of securities held below that last reported to Agency by Escrow Agent.
4. Escrow Agent shall determine the current cash value of such securities held by it as of the close of business on the first business day following the _____ day of each month and, in addition, on any other days which the Agency may from time to time specify in a written notice to Escrow Agent. Current cash value shall be determined as follows:
   (a) For securities traded over-the-counter or on a stock exchange:
      (1) Determine either the current bid price for the securities as of the close of business or the face value of the securities, whichever is less.
      (2) Subtract the cost of sale (broker commission).
      (3) Subtract all unpaid escrow fees and costs associated therewith.
   (b) For certificates of deposit:
      (1) Determine the face amount.
      (2) Subtract the potential interest penalty for immediate conversion.
      (3) Subtract all unpaid escrow fees and costs associated therewith.
   (c) Determine the value of other securities by procedures calculated to determine net realizable value. Promptly upon making each such determination, Escrow Agent shall notify Agency of the securities held and current cash value of such securities.

5. At any time or times that Agency believes it has a right to do so under the provisions of the Construction Contract, Agency may, without the consent of Contractor, deliver to Escrow Agent a written demand that Escrow Agent convert to cash all or any part of such securities. Upon seven days' written notice from Agency of such demand, Escrow Agent shall convert to cash all or part of such securities as demanded and shall distribute the cash as instructed by the Agency.

6. When the Construction Contract has been satisfactorily completed on the part of Contractor and any stop notices filed against the Construction Contract have been released, Agency shall give written notice to Escrow Agent that such securities may be returned to Contractor. Upon receipt of such written notice and payment of all escrow fees and costs, the Escrow Agent shall deliver to Contractor all money, interest, securities and other documents remaining in escrow and the escrow shall terminate.

7. Contractor, and not Agency, shall be liable to Escrow Agent for all of Escrow Agent's fees and costs associated with this escrow.

8. The Director of the Ventura County Public Works Agency, a Department Director of said Agency, or other person authorized in writing by such Director or Department Director is authorized to give written notice and to make written demands on behalf of Agency pursuant to sections 4, 5 and 6 hereof.

9. All written notices and demands pursuant to the escrow agreement and these Instructions shall be addressed as follows:

(a) To Agency:

Director, Ventura County Public Works Agency
800 South Victoria Avenue
Ventura, California 93009

(b) To Contractor:

(c) To Escrow Agent:

DATED: _____

_____	_____	_____
_____	_____	_____
By _____	By_____	By_____
Title _____	Title _____	Title_____
AGENCY	CONTRACTOR	ESCROW AGENT Bank Charter: State [ ] Federal [ ] Escrow Agent's Address: _____ _____

APPENDIX E BLANK

RELEASE ON CONTRACT

CONTRACT NAME: _____

SPEC. NO. _____, PROJECT NO. _____

WHEREAS, by the terms of the contract dated ____ _, 20___ entered into by _____

_____and the undersigned CONTRACTOR,

_____

_____

_____

undersigned CONTRACTOR agreed to perform certain work for the compensation specified in said contract; and

WHEREAS, the CONTRACTOR represents that said work is fully completed and that final payment is due to the CONTRACTOR under terms of said contract,

NOW, THEREFORE, in consideration of the promises and the payment by [AGENCY NAME] to the CONTRACTOR of the amount due under the contract, to wit, the sum of $_____ and the additional consideration of $1.00, receipt of which is hereby acknowledged by the CONTRACTOR, the CONTRACTOR hereby releases and forever discharges _____ of and from all manner of debts, dues, demands, sum or sums of money, accounts, claims and causes of action, in law and in equity, under or by virtue of said contract except the claim against the Agency for the remainder, if any, of the amounts retained as provided in 9-3.2, any amounts retained as required by Stop Notices or Labor Code Provisions, and any unsettled claims or disputes as follows: (If none, leave blank)

Description of Claim or Dispute	Amount	Date of Claim	Date of Notice of Potential Claim

The CONTRACTOR certifies that each unsettled claim or dispute listed hereon has been processed in compliance with the requirements for making claims under the contract, including giving notice pursuant to the applicable provisions of the contract, and following the procedures for resolution of disputes or claims set forth in subsection 6-12 of the contract. Acceptance of this Release on Contract by the [Agency Name] shall not be deemed as a waiver or release of its right to contest either the substantive or procedural validity of any listed unsettled claims or disputes.

IN WITNESS WHEREOF, the hand and seal of the CONTRACTOR have been hereunto set this ___ day of _____, 20___.

THIS FORM MUST BE ACCOMPANIED
by a proper acknowledgement form
(See Civil Code Section 1189)

Contractor

By

Title

SAMPLE PERFORMANCE AND PAYMENT BOND FORM

Bond No._____

SURETY BONDS

PERFORMANCE BOND

Whereas, the «Agency», hereinafter called "Agency", and «Contr», hereinafter called "principal", have entered into a contract dated «ContrDate» whereby principal agrees to complete certain designated work identified as project «ProjName» (Spec. No.«SpecNo»), and to perform other duties and obligations as described in said contract, which is incorporated herein by this reference and made a part hereof; and

Whereas, principal is required under the terms of said contract to furnish a bond to guarantee principal's faithful performance of the work and all terms and conditions of the contract;

Now, therefore, we the principal and the undersigned, as corporate surety, are held and firmly bound unto Agency in the penal sum of «CostText» ($«OrigCostFmtd») lawful money of the United States, for the payment of which sum well and truly to be made, we bind ourselves, our heirs, successors, executors and administrators, jointly and severally, firmly by these presents.

The condition of this obligation is such that if the principal, its heirs, executors, administrators, successors or assigns, shall in all things stand to and abide by, and well and truly keep and perform the covenants, conditions, and provisions in the said contract and any alteration thereof made as therein provided, on principal's part, to be kept and performed at the time and in the manner therein specified, and in all respects according to their true intent and meaning, and shall indemnify and save harmless Agency, its officers, agents and employees, as therein stipulated, then this obligation shall become null and void; otherwise it shall be and remain in full force and effect.

The above obligation shall continue after Agency's acceptance of the work for the duration of the warranty period as specified in the contract during which time if principal fails to make full, complete, and satisfactory repair or replacement to the work and/or fails to protect Agency from loss or damage resulting from or caused by defective materials or faulty workmanship, the obligation of surety hereunder shall continue so long as any obligation of principal remains.

PAYMENT BOND

And, whereas, under the terms of said contract, principal is required before entering upon the performance of the work, to file a good and sufficient payment bond with the Agency to secure the claims to which reference is made in Title 3 (commencing with Section 9000) of Part 6 of Division 4 of the Civil Code of the State of California.

Now, therefore, said principal and the undersigned, as corporate surety, are held firmly bound unto the Agency and all contractors, subcontractors, laborers, material suppliers and other persons employed in the performance of the aforesaid contract and referred to in the aforesaid Civil Code in the like sum of «CostText» dollars ($«OrigCostFmtd») for materials furnished or labor thereon of any kind, or for amounts due under the Unemployment Insurance Act with respect to such work or labor, or for any amounts required to be deducted, withheld and paid over to the Franchise Tax Board from the wages of employees of the contractor and the contractor's subcontractors, that said surety will pay the same in an amount not exceeding the amount hereinabove set forth, and also in case suit is brought upon this bond, will pay, in addition to the face amount thereof, costs and reasonable expenses and fees including reasonable attorney's fees incurred in successfully enforcing such obligation, to be awarded and fixed by the court, and to be taxed as costs and to be included in the judgment therein rendered.

It is hereby expressly stipulated and agreed that this bond shall inure to the benefit of any and all persons, companies and corporations entitled to file claims under Title 3 (commencing with Section 9000) of Part 6 of Division 4 of the Civil Code, so as to give a right of action to them or their assigns in any suit brought upon this bond.

Should this condition of this bond be fully performed, then this obligation shall become null and void; otherwise, it shall be and remain in full force and effect.

GENERAL TERMS

The surety hereby stipulates and agrees that no change, extension of time, alteration or addition to the terms of said contract or the plans and specifications accompanying the same shall in any manner affect its obligations on these bonds, and it does hereby waive notice of any such change, extension, alteration or addition.

Nothing herein shall limit the Agency's rights or surety's obligations under the contract or applicable law, including, without limitation, California Code of Civil Procedure section 337.15.

In witness whereof, this instrument has been duly executed by the principal and surety above named

on ,_____, 20 .

«Contr»
Name of Principal

By_____

Title_____

_____
Name of Surety

By_____
Attorney-in-Fact

Address _____

City_____ State ___ Zip_____

Telephone No._____

INDICATE COMPLETE ADDRESS OF SURETY TO WHICH CORRESPONDENCE CONCERNING THIS BOND SHOULD BE DIRECTED.

SAMPLE BOND FORM

Agency will prepare the Bond in this format and transmit it to the Contractor along with the Contract and the Notice of Award letter.

Surety shall fill in the Bond No., date identification and signature of surety in places provided.

Contractor shall sign and indicate title in place provided.

A-467/9-Tmpl

Special Provisions

Table of Contents

DOCUMENT 00 01 10
TABLE OF CONTENTS

DIVISION 01 – GENERAL REQUIREMENTS
01 10 00 SUMMARY OF WORK
01 12 16 PHASING AND SEQUENCING
01 12 18 ELEVATOR COORDINATION
01 12 20 FIRE WATCH
01 13 13 DELEGATED DESIGN AND DEFERRED APPROVAL REQUIREMENTS
01 14 01 INSTRUCTIONS TO CONTRACTORS
01 14 13 ACCESS TO THE SITE
01 25 00 SUBSTITUTION PROCEDURES
01 26 00 CONTRACT MODIFICATION PROCEDURES
01 26 13 REQUESTS FOR INFORMATION
01 29 73 SCHEDULE OF VALUES
01 31 00 PROJECT MANAGEMENT AND COORDINATION
01 31 19 PROJECT MEETINGS
01 31 23 WEB BASED CONSTRUCTION MANAGEMENT
01 32 00 PROGRESS SCHEDULES AND REPORTS
01 32 33 PHOTOGRAPHIC DOCUMENTATION
01 33 00 SUBMITTAL PROCEDURES
01 42 00 REFERENCES
01 43 00 QUALITY ASSURANCE
01 45 16 CONTRACTOR QUALITY CONTROL
01 45 23 TESTS AND INSPECTIONS
01 50 00 TEMPORARY FACILITIES AND CONTROLS
01 58 13 TEMPORARY PROJECT SIGNAGE
01 60 00 PRODUCT REQUIREMENTS
01 64 00 OWNER-FURNISHED PRODUCTS
01 73 00 EXECUTION
01 73 29 CUTTING AND PATCHING
01 74 00 CLEANING
01 77 00 CLOSEOUT PROCEDURES
01 78 23 OPERATION AND MAINTENANCE DATA
01 78 36 WARRANTIES AND BONDS
01 78 39 PROJECT RECORD DOCUMENTS
01 79 00 DEMONSTRATION AND TRAINING

DIVISION 02 – EXISTING CONDITIONS
02 41 19 DEMOLITION FOR REMODELING

DIVISION 03 – CONCRETE
03 00 10 CONCRETE FASTENING SYSTEMS
03 30 00 CAST-IN-PLACE CONCRETE

DIVISION 05 – METALS

05 05 12 HOT DIP GALVANIZING
05 05 13 SHOP APPLIED STEEL PRIMER
05 12 13 ARCHITECTURALLY EXPOSED STRUCTURAL STEEL
05 31 00 FLOOR METAL DECKING
05 40 00 COLD-FORMED METAL FRAMING
05 50 00 METAL FABRICATIONS
05 51 00 METAL STAIRS
05 73 00 DECORATIVE METAL RAILINGS

DIVISION 06 – WOOD, PLASTICS AND COMPOSITES
06 10 00 ROUGH CARPENTRY
06 64 00 INTERIOR ARCHITECTURAL WOODWORK

DIVISION 07 – THERMAL AND MOISTURE PROTECTION
07 00 10 FIRESTOPPING
07 18 00 PEDESTRIAN TRAFFIC COATINGS
07 54 19 PVC ROOF PATCHING
07 62 00 SHEETMETAL FLASHING AND TRIM
07 92 00 JOINT SEALANTS

DIVISION 08 – OPENINGS
08 11 13 HOLLOW METAL DOORS AND WINDOW FRAMES
08 31 16 ACCESS PANELS
08 41 13 ALUMINUM-FRAMED ENTRANCES AND STOREFRONTS
08 41 44 FIRE-RATED INTERIOR STOREFRONTS
08 71 00 DOOR HARDWARE
08 80 00 GLAZING

DIVISION 09 – FINISHES
09 00 10 GYPSUM BOARD AND METAL FRAMING SYSTEMS
09 00 11 GYPSUM BOARD SHAFT WALL ASSEMBLIES
09 00 20 INTERIOR GYPSUM PLASTER
09 00 30 CERAMIC TILE
09 00 40 PAINTING
09 51 13 ACOUSTIC PANEL CEILINGS
09 65 16 RESILIENT FLOORING
09 68 13 TILE CARPETING
09 72 17 RIGID SHEET WALL PROTECTION
09 81 33 ACOUSTICAL INSULATION, SEALANTS AND ACCESSORIES

DIVISION 10 – SPECIALTIES
10 11 16 MARKERBOARDS
10 26 00 CORNER GUARDS
10 26 13 HANDRAIL AND CHAIR RAIL
10 28 13 COMMERCIAL TOILET ACCESSORIES
10 44 00 FIRE PROTECTION SPECIALTIES

10 51 13 METAL LOCKERS

DIVISION 12 – FURNISHINGS
12 24 00 MANUAL WINDOW SHADES

DIVISION 14 – CONVEYING SYSTEMS
14 42 16 VERTICAL PLATFORM WHEELCHAIR LIFT

DIVISION 22 – PLUMBING
SEE DRAWING SHEET NO. P5.1 FOR PLUMBING SPECIFICATIONS
22 42 23 PREFABRICATED SHOWERS

DIVISION 23 – MECHANICAL
SEE DRAWING SHEET NO. M6.1 FOR MECHANICAL SPECIFICATIONS

DIVISION 26 – ELECTRICAL
SEE DRAWING SHEET NO. E5.1 FOR ELECTRICAL SPECIFICATIONS

DIVISION 27 – COMMUNICATIONS
27 10 00 STRUCTURED CABLE SYSTEM
27 15 00 CABLE TV DISTRIBUTION
27 52 23 NURSE CALL SYSTEM
27 53 13 WIRELESS CLOCK SYSTEM

DIVISION 32 – EXTERIOR IMPROVEMENTS
32 18 16 PLAYGROUND PROTECTIVE SURFACING

END TABLE OF CONTENTS

Special Provisions

SECTION 01 00 01
GENERAL REQUIREMENTS

PART 1 - GENERAL

1.01 SUMMARY

A. The following items, reference, supplement, modify, change, delete from, or add to the Ventura County Standard Specifications (VCSS), Part 1 - General Provisions, Sections 1 through 10. Where any portion of the General Provisions is modified, or any paragraph, subparagraph or clause thereof is modified or deleted, unaltered provisions remain in effect.

1. Reference VCSS 1-2 Definitions. comply with additional requirements of Section 01 42 16.

2. Abbreviations to paragraph VCSS 1-3.1. Refer to Section 01 42 13 for additional abbreviations.

3. Reference VCSS 2-5.3 Submittals. Comply with additional requirements of Section 01 33 01.

4. Reference VCSS 2-5.4 Record Drawings. Comply with the additional requirements of Section 01 78 39.

5. Reference VCSS 3-3.2.3 Mark-up. Comply with the modifications in 01 00 01 1.18 Changes in Work.

6. Reference VCSS 4-1.2 Protection of Work and Materials. Comply with additional requirements of Section 01 65 01.

7. Reference VCSS 4-1.6 Trade Names or Equals. Comply with additional requirements of Section 01 25 01 for methods of requesting approval for "or equal" materials or methods.

   Add the following paragraph to VCSS 4-1.6.1 “When one or more than one manufacturer is listed as acceptable in a specification section, the first manufacturer and/or product listed is the basis for development of the Contract Documents and establishes the required minimum standard of quality. This is also the basis for the indicated size and dimensions of the product and/or equipment. If manufacturer and/or product other than first listed is used, then Contractor shall bear all costs of redesign and changes in construction necessary to adapt the offered equipment or product to the Work."

8. Reference VCSS 6-8.6 Written Guarantee. Comply with additional requirements of Section 01 78 36.

9. Reference VCSS 6-13.1 Working Hour Limitations. Comply with additional requirements of Section 01 11 01.

10. Reference VCSS 7.5.3.2 Contractor Furnished Permits. Deferred approvals noted on Sheet T of the drawings require the Contractor's preparation of plans and calculations to obtain approval of permits from OSHPD in addition to the basic permits arranged for by the AGENCY as provided in VCSS 7-5.3.1.

Contractor shall take action in a timely manner to obtain such approvals or permits so as not to delay completion of the Work beyond the time provided in VCSS Sections 6-7. Contractor shall include all costs and consider the time required to obtain approvals or permits in the Contract price bid. Documents prepared for OSHPD review by the Contractor or subcontractor shall comply with the OSHPD requirements. Refer to "Guide to Working with OSHPD" found at: https://hcai.ca.gov/wp-content/uploads/2020/10/Guide-Working-on-Projects-OSHPD-Jurisdiction-Tips-from-Experts.pdf

11. Reference VCSS 7-8.1 Cleanup and Dust Control. Comply with the additional provisions of Section 01 74 01.

12. Reference VCSS 7-8.4 Sanitation. Comply with additional requirements of Section 01 51 01, Paragraph 1.04.

13. Reference VCSS 7-8.5 Temporary Light, Power and Water. Comply with additional requirements of Section 01 51 01, Paragraphs 1.01, 1.02, and 1.03.

1.02 CONFERENCE

A. Pre-Bidding Conference: A mandatory or non-mandatory Pre-Bidding Conference will be held at **300 Hillmont Avenue, Ventura, CA 93003 at 2:00PM on 10/20/2022**. Meet in the main lobby of the VCMC hospital for COVID Screening. None of the information transmitted at this meeting will be construed in any way to modify the plans and specifications. Any modification will be forwarded to all plan holders as an addendum.

B. Pre-Construction Conference: The AGENCY will schedule a Pre-Construction Conference after Notice of Award.

1.03 QUALITY ASSURANCE/CONTROL OF INSTALLATION

A. Monitor quality control over suppliers, manufacturers, products, services, site conditions and workmanship to produce Work of specified quality as indicated in Section 01 80 01.

1.04 REFERENCES

A. Conform to reference standard by date of issue current as of date of Contract Documents.

1.05 BARRIERS AND FENCING

A. Construct and maintain barricades for the following: As required by local authorities and State safety ordinances as required to protect the AGENCY's property from injury or loss; as required for the protection of the public and as required as indicated on the drawings.

1.06 CUTTING AND PATCHING

A. The Contractor shall perform cutting and patching per the provisions of Section 01 73 29.

1.07 PROJECT MEETINGS

A. Project meetings shall be held as stipulated in Section 01 31 19.

1.08 TESTS AND INSPECTIONS

A. Tests and inspections shall be performed per the provisions of Sections 01 43 00 and 01 45 23.

1.09 DELIVERY, HANDLING AND STORAGE

A. Comply with the provisions of Section 01 64 00.

1.10 SYSTEM DEMONSTRATIONS AND INSTRUCTION

A. Comply with the provisions of Section 01 79 00.

1.11 CLEANING

A. The project shall be cleaned per the provisions of Section 01 74 00. This is in addition to that which is mentioned in VCSS Section 7-8.1 of the General Provisions.

1.12 OPERATION AND MAINTENANCE

A. Furnish operation and maintenance data per Section 01 78 23.

1.13 SPARE PARTS AND MAINTENANCE MANUALS

A. Provide spare parts and maintenance materials per the provisions of Section 01 78 23.

1.14 SUMMARY OF PROJECT

A. The Project Work, sequencing and other provisions will be as indicated in Sections 01 10 00 and 01 12 16.

1.15 HEALTH CARE AGENCY CONTRACTORS' HANDBOOK & INSTRUCTIONAL VIDEO

A. The Contractor shall comply with the Health Care Agency Contractor's Handbook and video. This handbook establishes the Owner's criteria for working within and around an operating health care facility. This handbook and video are made a part of the specifications by reference and is available for review from the AGENCY.

1.16 PROJECT SUPERINTENDENT / PROJECT MANAGER

A. The Contractor shall provide a full-time project superintendent on the job site each working day between the contract start date specified in the contract proposal and the acknowledgement of completion of Work specified in VCSS Section 6-8. The Project Superintendent shall have a minimum of (5) five years experience in supervising Office of Statewide Health Planning and Development (OSHPD)/Department of Health Care Access and Information (HCAI) projects of similar complexity. The Contractor shall also employ a Project Manager, who is responsible for the supervision of the Project Superintendent, who also has a minimum of (5) five years experience in managing construction of OSHPD/HCAI projects of similar complexity and size to the Work. For each day work is performed at the site between the start date specified in the contract proposal and the acknowledgement of completion of Work specified in VCSS Section 6-8 for which the

above required Project Superintendent is not at the job site, or each working day the above Project Manager assigned to this project is not employed by the Contractor, the Contractor will be assessed liquidated damages of $1,100.00 per day. The Project Manager can temporarily act in the capacity of the Project Superintendent in the event of temporary illness, vacation, or emergency to the Project Superintendent. Alternatively, in the event of illness, vacation, etc., a Superintendent may be substituted per the provisions of Section B, below. These liquidated damages are in addition to those specified elsewhere.

B. The identity and qualifications, and references of the project superintendent and project manager shall be submitted to the AGENCY by the Contractor with the Bid Proposal. Contractor shall reference the OSHPD/HCAI Project Number(s) and Project Title(s) substantiating the listed qualifications in Subsection A. There shall be no substitution for the Project Superintendent or Project Manager identified by the Contractor without prior written approval of such substitution by the Engineer. Any subsequent Project Superintendent or Project Manager shall have the minimum qualifications set forth above.

1.17 LABOR COMPLIANCE SOFTWARE

A. The County of Ventura has implemented, and maintains, a labor compliance software service program called “LCP Tracker”.

B. Contractors and subcontractors shall keep accurate payroll records in accordance with Labor Code Section 1776 and shall furnish weekly certified payrolls for their workers and shall input their certified payroll records electronically using LCP Tracker within 7 days following the end of the preceding week.

NOTE: This requirement is in addition to the State of California requirement to upload payrolls into the State DIR electronic system. However, LCP Tracker has the functionality to upload the submitted payrolls directly to the State DIR electronic system.

C. In bidding on the project, it shall be bidder’s responsibility to evaluate the cost of complying with the above-referenced LCP Tracker requirements.

D. AGENCY will provide materials and information to assist the Contractor with using LCP Tracker.

PART 2 - PRODUCTS (NOT USED)

PART 3 - EXECUTION (NOT USED)

END OF SECTION

This Page Left Blank Intentionally

SECTION 01 10 00
SUMMARY OF WORK

PART 1 - GENERAL

1.01 SUMMARY

A. Section Includes: Description of construction delivered under a single contract.

1.02 PROJECT INFORMATION

A. Project Name: Ventura County Medical Center (VCMC) Pediatric Unit

B. Project Address: 300 Hillmont Avenue
Ventura, CA 93003

C. Owner: County of Ventura

D. Architect of Record: Rasmussen & Associates, Jay Lomagno

1.03 PROJECT DESCRIPTION

A. The Project Includes: Construction and remodeling of existing nursing unit to add patient rooms and support spaces for use as a pediatric nursing unit, including the addition of a pedestrian walkway bridge from the pediatric unit to existing rooftop play yard.

B. Type of Contract: The project is constructed under a single prime contract.

1.04 PHASING AND SEQUENCING

A. General phasing and sequencing is the responsibility of the Contractor. Refer to Section 01 12 16 Project Phasing for additional requirements.

B. Phasing and sequencing of the work shall be done in a manner to accommodate use of the facilities by the patients and staff during construction. Contractor shall plan for in their daily schedule the potential re-sequencing of work to accommodate the needs of the facility. Should the needs of the staff and/or patients require that the contractor stop work in a specific area, the Contractor shall stop work in that area and move to another location to continue work that does not interfere with the facilities' operations. This re-sequencing shall be at no additional cost or additional time to the contract unless the Contractor can demonstrate that the area of work that is being impacted is on the critical path.

1.05 SPECIFICATION FORMAT AND CONVENTIONS

A. Format: Specifications are organized into Divisions and Sections in conformance with the Construction Specifications Institute's 49-division *MasterFormat*™ numbering system.

B. Titling and Arrangements: The order of articles, paragraphs and subparagraphs within the text of any given specification section is defined by a sequence of indentations.

1. Article, paragraph and subparagraph titles, and other identifications of subject matter in the specification sections are intended as aid in locating and recognizing various requirements in the beginning words of a sentence.
2. Where the title establishes the subject, the titles are subordinate to and do not define, limit, or otherwise restrict the specification text.
3. Specification text governs over titling and is interpreted as a whole.

C. Interpretation:

1. Various subdivision captions and headings are intended only as a matter of reference and convenience, and in no way define, limit or prescribe the scope or intent of the Contract Documents, or any subdivision thereof.
2. Underlining, bolding or capitalizing of words in the text does not signify or mean such words convey special or unusual meaning.

D. Specification Content: The specifications may use certain conventions for the style of language and intended meaning of certain terms, words and phrases when used in particular applications.

1. Imperative mood and streamlined language are sometimes used in these Specifications. The words “must,” “must be,” or “must conform to,” may be implied where a colon (:) is used within a sentence or phrase, depending on the context.
2. Specification requirements are performed by the Contractor, unless specifically indicated otherwise.
3. Whenever the context requires:

    a. Words and meanings are interpreted as appropriate
    b. Words implied, but not stated, may be inferred
    c. Use of the singular number is deemed to include the plural and the plural includes the singular
    d. Neuter gender includes both the feminine and masculine genders
    e. Masculine gender includes both the feminine and neuter genders
    f. Feminine gender includes both the masculine and neuter genders

E. Related Documents: Ventura County Standard Specification (VCSS), Drawings, and General Provisions of the Contract for Construction, including Division 00 General Conditions and Supplementary Conditions and other Division 01 General Requirements Specification Sections, apply to all subsequent technical specification sections in Divisions 02 through 49.

F. Drawing Coordination: Requirements for materials and products indicated on the Drawings are described in detail in the Specifications. One or more of the following are used on Drawings to identify materials and products:

1. Terminology: Materials and products are identified by the typical generic terms used in the individual specifications Sections.
2. Abbreviations: Materials and products are identified by abbreviations published as part of the U.S. National CAD Standard and scheduled on Drawings.
3. Keynoting: Materials and products are identified by keynotes referencing items found in this project manual.

G. Base CAD Files: Shall be provided by request and if available from the designers. Allow 48-hours for response of availability.

PART 2 - PRODUCTS (NOT USED)

PART 3 - EXECUTION (NOT USED)

END OF SECTION

SECTION 01 12 16
PHASING AND SEQUENCING

PART 1 – GENERAL

1.1 SUMMARY

A. The AGENCY has provided sequence and phasing recommendations herein, however, it is the Contractor's responsibility to provide a Sequencing Plan showing the order of how the work will be completed as one Contract, along with the Project Schedule as required by the specifications. Refer to the project scope of each permit for additional information.

B. The VCMC Pediatric Project is funded by a State of California Grant. The completion of the project and occupancy of the hospital has a critical deadline. It is the Contractor's responsibility to prioritize and schedule long lead time items to arrive and be installed Within the Contract Time. It is the Contractor's responsibility to use and schedule appropriate staff to complete the contract scope of work Within the Contract Time.

C. At all times, the first floor and elevator lobby will remain open and operational during the Work. The Work must be undertaken such that the facilities can maintain a safe, secure, healthy, comfortable and reasonably convenient environment for its normal operations. The Work shall be completed in Phases, such that the User may occupy and use the elevator lobbies on all floors and there will be no disruption to the emergency department services.

D. Prior to Notice to Proceed, the Contractor shall prepare and submit a construction phasing and sequencing plan for approval by the AGENCY which minimizes the impacts of construction on normal operations in accordance with this Section and the Phasing Plans or an approved alternative plan. The Construction Phasing and Sequencing Plan shall be updated as required during the course of the Work. Updates and revisions must be submitted for approval by the AGENCY. Refer to Division 01 14 01 Instruction to Contractors Working at VCMC for additional Infection Control and facility requirements.

1.2 REQUIREMENTS INCLUDED

A. Summary of Work

B. Life Safety Plans

C. Safety and Staging Plan

D. Phasing Plans

1.3 COMPLIANCE REQUIREMENTS

A. The scheduling requirements of the contract may include proposed alternatives to the phasing included herein, which shall be prominently indicated as deviations. Such deviations do not alter the phasing requirements except as specifically approved. Criteria for acceptance include no increase to disruptions to operations and no extension to the opening dates of the project elements.

B. Performance criteria for review and acceptance is defined in Section 1.4 below.

C. The various portions of the work shall be operational prior to performing work which disrupts the operations.

1.4 CONSTRUCTION PHASING PERFORMANCE CRITERIA

A. Safety

1. Contractor must maintain a safe environment for Occupants and Visitors to work around. Clear and protected access and egress routes shall be maintained around construction areas and activities for people, equipment and vehicles. Provide professionally prepared temporary signage to direct people and traffic along routes not used under normal conditions.

2. Provide temporary barriers, barricades and walls as necessary to separate construction areas and activities from Occupants and Visitors.

B. Health

1. Contractor must maintain a healthy environment for Occupants and Visitors at all times.

2. Protect the occupied areas of the facility from dust, fumes, and other airborne pollutants. Provide separation walls between construction I renovation areas and occupied areas to protect the occupants. If permanently installed air handlers are used during construction, filtration media with a Minimum Efficiency Reporting Value (MEREV) of (8) eight shall be used at each return air grille. Replace the filters as needed and at the conclusion of the project.

3. Protect Occupants and Visitors from excessive or harmful noise exposure.

4. Maintain occupant access and use of egress and elevators at all times.

5. Maintain all utility services during the utility relocation or new service work. Maintain utility services throughout the project. If a brief service interruption is required to accomplish the Work, the AGENCY must be notified in advance. A coordination meeting must be held with the AGENCY to review service interruption procedures prior to the service interruption.

C. Comfort

1. Provide reasonably finished spaces for use by Occupants and Visitors during the progress of the Work. Temporary construction separation walls shall be paint finished or equivalent on public sides.

2. The HVAC system improvements shall be implemented such that the occupied spaces of the building maintain comfort conditions for its occupants. The comfort conditions must be maintained during normal business hours of 6:30AM through 10:30PM. The temperature requirements are 72 to 77 degrees F.

D. Convenience

1. Maintain Occupants and Visitors access to building amenities, such as vending, seating and restroom facilities.

2. Protect the User's existing equipment during construction activities to prevent damage or contamination due to the progress of the Work.

3. Daily clean-up activities must be included in the Phasing and Sequencing Plan for Work in occupied areas performed outside normal business hours.

PART 2 – PRODUCTS (NOT USED)

PART 3 – EXECUTION (NOT USED)

END OF SECTION

This Page Left Blank Intentionally

SECTION 01 12 18
ELEVATOR COORDINATION

PART 1 - GENERAL

1.1 SUMMARY

A. The (2) two elevators that serve the Fainer Building, also known Building 304, will continue to be used by patient and staff during construction. These elevators also serve the Helipad on the roof of the Fainer building.

1.2 REQUIREMENTS INCLUDED

A. Summary of Work

1.3 COMPLIANCE REQUIREMENTS

A. The contractor is to use only (1) One elevator at a time. The (2) two elevators do not have the capability to recall a specific elevator to a specific location. (1) One elevator shall remain available for patients, visitors and staff to use at all times.

B. The elevators serve the roof Helipad. When the Contractor is notified by the Facility that a helicopter is approaching with a patient, the Contractor shall stop usage of all elevators immediately until given notice to resume from the Facility.

C. The Contractor shall install cleanable floor and wall protection in the two elevators.

PART 2 - PRODUCTS (NOT APPLICABLE)

PART 3 - EXECUTION (NOT APPLICABLE)

END OF SECTION

This Page Left Blank Intentionally

SECTION 01 12 20
FIRE WATCH

PART 1 – GENERAL

1.1 SUMMARY

A. Fire Watch may be required by HCAI when fire barriers are compromised during construction.

C. Fire watch is generally defined as, “The assignment of a qualified person or persons having the sole responsibility for the continuous patrol of a building or premises for the purpose of detecting fires and transmitting an immediate alarm to the building occupants and fire department.”

1.2 REQUIREMENTS INCLUDED

A. HCAI/OSHPD Policy Intent Notice: 14

1.3 COMPLIANCE REQUIREMENTS

A. Where a required fire protection system is placed out-of-order or rendered inoperable, HCAI and the fire department shall be notified, and an approved fire watch shall be provided for all occupants left unprotected by the shutdown until the fire protection system has been returned to service and termination of the fire watch is approved by HCAI.

B. Where fire barriers and smoke compartments are breached, HCAI and/or the fire department shall be notified, and an approved fire watch shall be provided for all occupants left unprotected by the breach until the scope of work has been complete and termination of the fire watch is approved by HCAI.

C. A fire watch shall be provided in accordance with the California Fire Code during hot work activities and shall continue for a minimum of (30) thirty minutes after the conclusion of the work.

D. The Contractor shall assign a Fire Prevention Superintendent who will be responsible for the Fire Prevention Program and ensure it is carried out through the completion of the project. The Fire Prevention Program Superintendent shall assign personnel to the fire watch, as required, and shall instruct fire watch personnel to:

1. The procedure notifying the Fire Department
2. The area to be patrolled
3. A method of alerting building occupants and an evacuation procedure
4. Receive the training necessary to ensure Fire Watch personnel are capable of reactivating disabled systems, when required.
5. Any special instructions required by HCAI and the local Fire Code Official.

E. The Fire Prevention Program Superintendent shall provide a logbook which contains a directory of names, telephone numbers and other pertinent information to assist in making emergency calls. The logbook shall be the official document used to record a history of patrol rounds.

F. The logbook shall be maintained on the premises and be available for inspection by the AHJ, HCAI, local Fire Code Official or State Marshall.

1.4 FIRE WATCH GUIDELINE

A. Fire watch personnel shall complete the HCAI "FIRE WATCH GUIDELINE" and return to HCAI. The document is available at: https://hcai.ca.gov/wp-content/uploads/2020/10/Pin-14-Fire-Watch.pdf

B. Fire Watch personnel shall be thoroughly familiar with the area they are patrolling.

C. Fire Watch personnel shall perform patrol operations according to instructions from HCAI and the local Fire Code Official.

D. Fire Watch personnel shall patrol their designated area at least once each hour.

E. Fire Watch personnel shall make reports as instructed. A written record of patrol rounds and any significant information shall be recorded in a logbook provided by Fire Prevention Program Superintendent.

F. Fire Watch personnel shall relay any special orders or pertinent information to relief personnel and the Fire Prevention Program Superintendent.

G. Fire Watch personnel shall remain on duty until properly relieved.

H. The entire building, all rooms (offices, spaces, areas) including basements, penthouses, shall be checked per Item C above unless otherwise specified by HCAI.

I. A hot work fire watch shall be provided during hot work activities and for not less than 30 minutes after the conclusion of the work.

J. A hot work fire watch shall include the entire hot work area and shall include additional personnel where vertical or horizontal exposures are involved.

K. The hot work fire watch shall have fire-extinguishing equipment readily available and shall be trained in the use of such equipment and shall be responsible for extinguishing spot fires and communicating an alarm.

END OF SECTION

SECTION 01 13 13
DELEGATED DESIGN & DEFERRED APPROVAL REQUIREMENTS

PART 1 - GENERAL

1.01 SUMMARY

This Section Includes:

A. Administrative and Procedural Requirements for:

1. Portions of the work, the design of which is delegated to the Contractor, including engineering services.
2. Additional delegated design requirements specific to a particular work result are specified within the appropriate Specification Section.

B. Section Excludes:

1. Requirements for Pre-Engineered Systems and Assemblies
2. Tested Systems and Assemblies Pre-Approved by the AHJ

1.02 REFERENCES

A. Definitions:

1. Delegated: Allocated from the AGENCY to the Contractor.
2. Design: The complete planning, arrangement and coordination of a discrete portion of the work, along with its graphic and written communication, including determination and engineering of the work's organization and structure in response to structural requirements, aesthetic requirements, functional requirements, dimensional and geometric limits, and the arrangement, performance and other criteria indicated in the Contract Documents.
3. Delegated Design: The determination of which professional or party to a construction project carries the ultimate responsibility for the design of a discrete portion of the work. Other terms including "design delegation", "design-build" and similar terms are synonymous with "delegated design".
4. Category I Delegated Design: Delegated design services specifically required by the Contract Documents that relate to systems, materials and equipment.

    a. The Contractor shall design that particular portion of the work as required by the Contract Documents, provided the AGENCY specifies the minimum performance and design criteria that the Contractor must meet.
    b. An example of Category I Delegated Design is the design of a cold-formed steel metal framing system, where the contractor is charged with meeting certain specified loading criteria.

5. Category II Delegated Design: Delegated design services that relate to the Contractor's means, methods, techniques and procedures of construction.

    a. This category does not involve design services for the finished work, but instead the Contractor shall design services necessary to facilitate the construction process.
    b. An example of Category II Delegated Design is the design of temporary shoring systems.

6. Engineering Services: Services performed by a qualified licensed professional engineer for the design of a discrete portion of the work, including fabrication and installation of systems, assemblies and components similar in material, design, complexity and extent to that indicated for this project.

7. HCAI: Department of Health Care Access and Information (Formally known as OSHPD)

8. Deferred Approval: A Portion of the work that is not fully developed and detailed with the approved Contract Documents, typically because information unavailable at the time for a complete design.

    a. Such portions of the work are fully developed by the Contractor and submitted to HCAI for review and approval at a later date than the original Contract Documents submittal.
    b. Work may not begin on the deferred portions of the work before HCAI's review and approval of the Contractor's deferred approval packages.

9. Deferred Approval Packages: Contractor-assembled documents required by HCAI for deferred approvals.

1.03 ADMINISTRATIVE REQUIREMENTS

A. Portions of the Contract Documents may delegate the design of certain items to the Contractor or may otherwise specify "delegated design requirements" and similar terms.

B. Coordination: The Contractor shall schedule and coordinate delegated design requirements and deferred approval items, including design, engineering, approvals, testing and inspections, installation and final HCAI approval.

C. The Contractor is professionally liable for delegated design work, including design, engineering, fabrication, installation, and conformance to all specified performance requirements.

D. Drawings of delegated design portions of the work are diagrammatic; they do not identify or imply solutions to engineering issues and are intended only to show the following:

    1. The design intent of finished materials, profiles, shapes and forms
    2. Relationships and alignments between items
    3. Location, identification, dimension and size of components, assemblies, accessories and other items
    4. Schematic attachment details and diagrams of fasteners and connections

E. Specifications for delegated design portions of the work are the performance type and establish the minimum allowable criteria for Contractor selected and designed materials,

fabrications, products, systems, assemblies, methods of execution and minimum performance requirements for indicated portions of the work.

F. The AGENCY reviews and determines if the Contractor's designs:

1. Generally conform to the overall project design
2. Conform to the specified performance requirements, including subsequent modifications
3. Are acceptably integrated into the overall design of the project

G. In the event of a dispute regarding Contractor-proposed delegated design solutions and the design intent of the Contract Documents, the AGENCY's interpretation is final.

H. Design Requirements: The Contractor shall design deferred approval portions of the work, including:
1. The complete planning, arrangement and coordination of deferred approval item
2. Determining and engineering the organization and structure of each deferred approval item in response to the structural requirements, aesthetic requirements, functional requirements and dimensional, geometric and other limitations indicated in the Contract Documents
3. Arrangement, performance and other criteria indicated in the Contract Documents
4. Graphic and written communication of deferred approval items, including Drawings and Specifications
5. Paying related fees and other costs
6. Either performing or causing testing and inspections
7. Installation, review and approval, including securing final HCAI approvals and turning deferred approval documentation over to the Owner

I. Pre-Approval Meeting: Conduct a pre-deferred-approval process meeting to review the Contractor's deferred approval items, including the Contractor's responsibilities and action plan for achieving deferred approval with AGENCY.

J. Sequencing: Approved submittals must be included with all deferred approval packages. Included submittals must be completely reviewed, corrected and approved by the AGENCY with the notation "APPROVED - NO EXCEPTIONS TAKEN". The AGENCY's action designated "APPROVED AS NOTED" is not permitted for deferred approval submittals.

1.04 PROCEDURAL REQUIREMENTS

A. Design Requirements: Proposed delegated design solutions must demonstrate conformance to the original design intent indicated in the Contract Documents, as determined by the Architect.

1. Unless otherwise defined by the Contract Documents, the appearance of exposed elements, including member sizes, profiles and alignment of components must be:

a. Within the dimensional limits and section profiles indicated
b. Consistent throughout the project

2. Deviation from the profiles, layouts, dimensional sizes, locations or arrangements indicated, is not permitted without prior written consent from the Architect; nor may the Contractor add or assume it may add items not indicated on the Contract Documents, including additional exposed supports, without prior written consent from the AGENCY.

3. The Contractor may not infer or deduce solutions to design or engineering issues directly from the Contract Documents. Contractor-proposed delegated design solutions that exactly follow the details indicated on the Drawings do not relieve the Contractor from liability for the design and performance of any delegated design portion of the work.

B. Engineering Requirements: Engineer delegated design portions of the work to:

1. Meet or exceed the specified performance criteria
2. Conform to the profiles indicated and to other requirements of the Contract Documents
3. Satisfy the requirements of the AHJ
4. Provide structurally sound, leak-proof, non-corroding and weather tight assemblies, as applicable, that accommodate, resist, distribute or transfer, as applicable, the minimum specified in-service loads, thermal, seismic and wind sway, or other types of movement, without incipient or catastrophic failure.

C. Regulatory Requirements: Delegated design portions of the work must be designed and engineered in conformance with the applicable portions of the California Building Code and other requirements of the AHJ.

1.05 SUBMITTALS

A. General: Coordinate and process submittals for delegated design portions of the work in same manner as submittals for other portions of the work.

B. Informational Submittals:

1. Design Data: Submit engineering calculations demonstrating conformance to the requirements of the Contract Documents and the AHJ.

a. Calculations must be legible and incorporate sufficient cross-references to shop drawings to make calculations readily understandable and reviewable
b. At a minimum, structural calculations must contain at least:

1) An analysis of framing members
2) Section property computations for framing members
3) An analysis of anchors, including anchors embedded in concrete
4) The signature and seal of the qualified California Licensed Professional Structural Engineer responsible for their preparation.

c. Test reports are not an acceptable substitute for calculations.

1.06 QUALITY ASSURANCE

A. Professional Engineer Qualifications: Must be legally qualified to practice in California with at least (10) ten consecutive years experience providing engineering services on a weekly basis for projects similar in material, design, complexity and extent to this project, and whose products have resulted in applications with a record of successful in-service performance.

PART 2 - PRODUCTS

2.01 MATERIALS

A. Provide materials, fabrications, products, components, accessories and other items required or necessary for a complete design, whether or not such items are indicated on the Drawings or in the Specifications.

B. Provide anchors, attachments, inserts, fasteners, clips, bracing, framework and other items as required or necessary to meet specified design and performance requirements and to securely attach or fasten delegated design portions of the work to adjacent supports, or to related adjoining work, whether or not such items are indicated on the Drawings or in the Specifications.

PART 3 - EXECUTION

3.01 DESIGN

A. General: Unless otherwise indicated or specified, maintain the visual concept shown and conform to the design intent and all performance requirements indicated on the Drawings and in the Specifications, as determined by the Architect.

1. In the interest of certain fabrication or erection methods, minor dimensional changes and detailing adjustments to the original design communicated in the Contract Documents may become necessary.
2. Obtain written approval from the Architect for proposed changes and adjustments before procurement, fabrication, manufacture, assembly or installation, as applicable.

B. Structural Design: Engage a qualified licensed professional structural engineer to design supports and connection details and to determine fastener materials, types, sizes and locations.

1. Fasteners or connections may neither conflict with, nor require revision to the finish profiles indicated or to the supporting work.
2. Connections may not impose eccentric loading, nor induce twisting or warping to supporting structures.
3. Connections must be designed to accommodate potential and actual misalignment of adjacent work within normal, ordinary and customary construction tolerances, and the tolerances specified in other Sections, whichever is more stringent.

C. Mechanical Design: Engage a qualified licensed professional mechanical engineer to design fire sprinkler systems, unless another type of engineer is required by the AGENCY or the AHJ.

D. Electrical Design: Engage a qualified licensed professional electrical engineer to design fire alarm systems, unless another type of engineer is required by the AGENCY or the AHJ.

E. Earthwork Design: Engage a qualified licensed professional civil engineer to design soil retaining and other earthwork systems, unless another type of engineer is required by the AGENCY or the AHJ.

3.02 CATEGORY I DELEGATED DESIGN SCHEDULE

A. Facility Construction Subgroup: Fire Sprinkler System, Nurse Call System, Essential Electrical System Coordination Study

3.03 CATEGORY II DELEGATED DESIGN SCHEDULE

A. Facility Construction Subgroup: Infant Security System, Access Control System, Philips Patient Monitoring

END OF SECTION

SECTION 01 14 01
INSTRUCTIONS TO CONTRACTORS WORKING AT VENTURA COUNTY MEDICAL CENTER

PART 1 - GENERAL

1.01 SUMMARY

A. Prior to the start of a project, the Contractor must obtain approval from the AGENCY's Representative for any and all necessary arrangements for routing of workers, equipment, and material to the job location and procedures in clean and sterile areas. In addition, the Contractor shall become familiar with applicable Medical Center policies and procedures and comply with the following for the duration of the Project. The Contractor shall designate a person responsible for assuring the implementation of measures needed for environmental control and mitigation.

B. Related Sections include the following:

1. Ventura County Standard Specifications, Part 1 - General Provisions
2. Section 01 00 01 General Requirements

C. References

1. Facilities Guidelines Institute (FIG), *Guidelines for Design and Construction of Health Care Facilities*, Includes ANSI/ASHRAE/ASHE Standard 170-2008, Ventilation of Health Care Facilities, Current Edition
2. Association for Professionals in Infection Control and Epidemiology, Inc. (APIC), Washington, D.C.
3. California Code of Regulations, Title 17, Public Health.
4. Joint Commission on Accreditation of Healthcare Organizations (JCAHO), *Comprehensive Accreditation Manual for Hospitals,* latest edition, JCAHO, Oak Brook Terrace, IL, 60181.
5. U.S. Department of Health and Human Services, Centers for Disease Control, *Guidelines for Environmental Infection Control in Health-Care Facilities*, Centers for Disease Control, Atlanta, GA, Current Edition
6. AGENCY, *Facility Construction, Renovation and Maintenance: Infection Control Risk Assessment*, Current Edition.
7. URS *Report: Environmental & Infection Control Study*, Current Edition.
8. California Code of Regulations; Title 16; Division 17.
9. Guide to Working with HCAI: https://hcai.ca.gov/construction-finance/resources/training-education/

1.02 SUBMITTALS

A. Medical Safety and Infection Control Program: Within (15) fifteen days after Notice to Proceed, but not less than (10) ten days before gaining access to the site to start Work, Contractor shall submit its written program with detailed outline of procedures for complying with AGENCY requirements. The program shall be coordinated with the Contractor's schedule.

1.03 COMMUNICATION, COORDINATION AND PLANNING

A. The Contractor shall comply with supplemental instructions from the AGENCY concerning the facility's medical safety and infection control. When necessary to prevent unsafe conditions, supplemental instructions may include work stoppages to reschedule and/or redirect the Work.

1.04 TRAINING

A. Provide training and orientation on infection control and AGENCY procedures for all personnel employed by the Contractor, subcontractors and any other personnel entering AGENCY in support of the Contractor.

1.05 UTILITY INTERRUPTIONS AND PRIOR NOTIFICATION

A. Shutdown or interruption of water, chilled water, steam, electrical services, natural gas, compressed air, vacuum, oxygen, nitrous oxide, or any utility system requires written notice a minimum of (14) fourteen working days in advance. Contractor is not authorized to interrupt utility services without this advance notification and the prior approval of the AGENCY's Representative.

1.06 ENVIRONMENTAL CONTROLS

A. Noise: All work shall be performed with a minimum of noise or disruption to normal activities in the surrounding areas.

Extraordinary care and concern must be exercised to avoid disruption of the patient population during construction. If the AGENCY's Representative indicates a problem due to construction activities, activities shall be stopped. The Contractor is to notify the Engineer immediately to make satisfactory arrangements for the approved continuation of the Work. The Contractor shall develop a Workplan, for the AGENCY's approval, which demonstrates noise considerations for the patients' sleep period, patients' medical visits, adjacent neighbors and the ongoing function of the facility. The following noise control procedures shall be employed:

1. Maximum increase in noise shall be limited to approximately 15db over ambient.
2. The onsite construction supervisor shall have the responsibility and authority to receive and resolve noise complaints. A clear appeal process shall be established prior to construction commencement that will allow for resolution of noise problems that cannot be immediately solved by the site supervisor.
3. All noise-producing equipment and vehicles using internal combustion engines shall be equipped with mufflers, air-inlet silencers where appropriate or directed by AGENCY, and any other shrouds, shields, or other noise-reducing features in good operating condition that meet or exceed original factory specification. Mobile or fixed "package" equipment (e.g., arc-welders, air compressors) shall be equipped with shrouds and noise control features that are readily available for that type of equipment.

4. All mobile or fixed noise-producing equipment used on the project that is regulated for noise output by a local, state or federal agency, shall comply with such regulation throughout the duration of the project.
5. Use electrically powered equipment instead of pneumatic or internal combustion powered equipment where feasible and needed to control excessive noise.
6. Material stockpiles and mobile equipment staging, parking and maintenance areas shall be located as far as practicable from noise-sensitive receptors.
7. The hours of material transport shall be restricted to the periods and days permitted by both this contract and local noise or other applicable ordinance.
8. The use of noise producing signals, including horns, whistles, alarms and bells shall be for safety warning purposes only.
9. No project-related public address or music system shall be audible to any adjacent noise-sensitive receptor.

B. Odors: When odors are a concern, arrangements shall be made by the Contractor for their containment or control. Where this is not feasible, specific arrangements should be made to minimize the disturbance of normal AGENCY activities. Where controllable, fumes and odors shall not be allowed to migrate to occupied areas. Contractor shall work with Facilities to modify adjacent air circulation systems as deemed necessary during the construction period. Modification shall be at the Contractor's expense.

C. Vibrations: If vibration becomes an impact to facility and hospital operations, the Contractor shall stop operations, reschedule and/or implement the following with the approval of the AGENCY's Representative:

1. Phase demolition, earthmoving and ground-impacting operations so as not to occur in the same time period, to the extent practicable. The total vibration level produced could be less when each vibration source operates separately.
2. Select demolition methods not involving impact, where practicable.
3. Avoid vibratory rollers and packers near vibration-sensitive areas.

1.07 SALVAGE AND DISPOSAL

A. All existing property of the AGENCY that is removed from the construction site and has been identified to be salvaged by the AGENCY shall be delivered to a secure site as specified by the AGENCY's Representative.

B. Construction debris, or material that has no redeemable value, is to be placed in Contractor-furnished refuse bins for safe and legal removal from the premises. AGENCY refuse bins may not be utilized unless so authorized by the AGENCY.

C. Trash shall be covered when transported in public areas.

1.08 PARKING

A. Contractor and related personnel shall park in authorized areas only.

B. The Contractor's parking is restricted to street parking on Hillmont Avenue and designated loading and unloading zone. The Contractor's lay-down and storage of materials is restricted to within the project area. Any deviation requires the AGENCY's approval.

1.09 SANITARY

A. Contractor shall provide temporary toilet facilities. The Contractor will not be allowed to use the AGENCY restroom facilities whether in existing facilities or those being constructed.

B. Contractor shall submit proposed location of temporary toilet(s) to the AGENCY's Representative for approval.

C. Construction personnel will not be allowed to use VCMC Campus restroom facilities for personal or equipment clean-up.

D. Sanitary Facilities shall be in accordance with OSHA regulations.

1.10 CAFETERIA AND FOOD

A. Construction personnel shall police their own areas. All cups, cans, paper, wrappers and discarded food must be placed in trash receptacles at the end of each break.

B. Contractors shall submit the proposed location of any break and eating areas, either inside or outside of the project boundaries, to the AGENCY's Representative for approval.

C. Construction personnel are not allowed to have food within the facilities under construction except for areas that have been designated by the Contractor and approved by the AGENCY's Representative.

1.11 BADGES

A. Badges shall be worn by all Contractor's personnel and all of their subcontractors' personnel.

1.12 PHONES

A. No cellular telephones shall be operated in patient care areas.

B. Construction personnel shall pay for separate phone services. Pay phones are not available for Contractor use. Pay phones onsite are reserved for staff, patients and their families.

1.13 SMOKING AND TOBACCO

A. Smoking and the use of tobacco products including chewing tobacco are prohibited within the boundaries of the VCMC Campus.

1.14 SECURITY

A. The phone number for Security is: (805) 652-6283.

B. All personnel must obey and act immediately upon any request by security.

C. In an emergency, dial 911.

1.15 SAFETY

A. General

1. Watch for guests and patients.
2. Work only where there is a positive barrier separation between construction activities and others.
3. Clean up all work areas immediately in occupied areas.
4. Do not drape cords across corridors. All cords must be attached to the ceiling or taped to the floor (use tape with non-marring adhesive).
5. Maintain a minimum of 6’-0” clear within all corridors.
6. Do not leave materials or equipment in the corridor.

B. Safety equipment and consideration should include, but are not limited to:

1. Anyone known to be under the influence of alcohol or drugs shall be dismissed from the Project at once and not be allowed to return.
2. Offensive language is not permitted in any area where it may be overheard by patients, staff or visitors.
3. Provide adequate emergency first aid equipment.
4. Post location and emergency phone numbers for local medical care.
5. Monitor safe ladder usage.
6. Monitor noise levels and establish safe limitations.
7. Ensure safe ventilation for air contaminants.
8. Insist on personal protective equipment, such as hard hats, safety shoes and eye, ear, and face protection equipment.
9. Safety nets, belts, harnesses and lifelines shall be used, as appropriate.
10. Provide adequate emergency fire protection equipment.
11. Post location and emergency phone numbers for local fire departments.
12. Provide safe storage for all flammable and combustible materials.
13. Insist on safe and proper use of hand power tools and electrical drop cords.
14. Operation of cranes, derricks and hoists should be in accordance with manufacturer’s recommendations and appropriate ANSI regulations.
15. All construction operations and personnel are subject to CAL-OSHA and AGENCY Environmental Health & Safety regulations.
16. Provide adequate barricades and safety lighting at all open trenches adjacent to public access.
17. Properly fence entire confines of project site to avoid public access or unauthorized personnel.
18. All wall, floor and ceiling penetrations shall be sealed to maintain fire and smoke ratings in accordance with CBC, NFPA 99 and *Life Safety Code*.
19. All emergency exit passages must be maintained free of obstructions.
20. Provide barricades and fencing in accordance with the Construction Logistic Drawings.

C. Fire Prevention During Welding, Cutting and Other Hot Work

1. Hot work includes welding, heat treating grinding, thawing pipe, powder-driven fasteners, hot riveting and similar applications producing a spark, flame or heat.
2. Hot work shall be performed in a designated area that is approved for hot work by the AGENCY's Representative.
3. The Contractor shall ensure that only approved apparatus, such as torches, manifolds, regulators, or pressure-reducing valves, and acetylene generators are used.
4. The Contractor shall ensure that all individuals involved in hot work are:
   a. Trained in the safe operation of their equipment and the safe use of the process.
   b. Have an awareness of the inherent risks involved and understand the emergency procedures in the event of a fire.
   c. Are aware if any special risks, such a flammable materials or hazardous conditions at the hot work site.

D. Emergency Codes Procedures

1. Emergency Codes are announced over the public address system. At any and all times that a Code is announced:
   a. Quickly remove all equipment and obstructions from corridors and doorways.
   b. Maintain these conditions until "code clear" is announced.

E. Alarms

1. Fire alarm signals are initiated manually or automatically through smoke and heat sensing devices.
2. Construction activities often create dust or smoke, which will activate the fire alarm system. Prior to conducting any work, notify Facility Services of the scope of work, the duration and location of the work and determine if the work will create dust or smoke. If the work will create dust or smoke, proceed as follows:
   a. For localized operations, cover the smoke detector with a dust cover approved by VCMC Facility Services and OSHPD FLSO. Remove promptly when work is complete.
   b. For larger areas, the detection system must be disabled. This is to be done only by Facilities Management staff. Even though the system is disabled, dust covers must be installed on all area smoke detectors.
      1) Contractor shall provide a continuous fire-watch until the system is restored.
      2) Remove dust covers promptly when work is complete.
      3) Detection system shall be restored to proper working order prior to releasing the fire-watch.

F. Interim Life Safety Measures

1. Interim Life Safety Measures (ILSMs) are a series of administrative actions required to temporarily compensate for the significant hazards posed by existing NFPA 101 2000 *Life Safety Code (LSC)* deficiencies or construction activities. Implementation of ILSM is required in or adjacent to all construction areas and throughout buildings with existing *LSC* deficiencies. ILSMs apply to all personnel (including construction workers), must be implemented upon project development, and must be continuously enforced through project completion. ILSMs are intended to provide a level of life-

safety comparable to that described in Chapters 1-7, 31, and the applicable occupancy chapters of the LSC. Each ILSM action must be documented through written policies and procedures. The ILSMs are:

a. Ensuring free and unobstructed exits. Personnel receive additional training when alternative exits are designated. Buildings or areas under construction must maintain escape routes for construction workers at all times. Means of exiting construction areas are inspected daily.

b. Ensuring free and unobstructed access to emergency services and for fire, police, and other emergency forces.

c. Ensuring fire alarm, detection, and suppression systems are in good working order. A temporary but equivalent system shall be provided when any fire system is impaired. Temporary systems must be inspected and tested monthly.

d. Ensuring temporary partitions are smoke tight and built of noncombustible or limited combustible materials that will not contribute to the development or spread of fire.

e. Providing additional fire-fighting equipment and training personnel in its use.

f. Prohibiting smoking throughout the buildings, in and adjacent to construction areas.

g. Developing and enforcing storage, housekeeping and debris removal practices that reduce the building's flammable and combustible fire load to the lowest feasible level.

h. Conducting a minimum of (2) two fire drills per shift, per quarter.

i. Increasing hazard surveillance of buildings, grounds and equipment with special attention to excavations, construction areas, construction storage and field offices.

j. Training personnel to compensate for impaired structural or compartmentalization features of fire safety.

k. Conducting organization wide education programs to promote awareness of LSC deficiencies, construction hazards, and ILSMs.

2. The Contractor must maintain the ILSM Daily Monitoring Form on site for inspection by Environmental Health and Safety (EH&S) and submit it to the AGENCY and Facility Services monthly and provide a complete set complied as a report at each project close-out.

G. Infection Control

1. Infection control is critical in all in-patient and out-patient areas of the hospital. Dust in ceilings and construction debris, contains fungus which, if inhaled by patients, can cause pneumonia and even death. Construction, demolition, and remodeling activities in hospitals have been implicated as a risk factor for certain nosocomial infections in immune compromised patients. The most notable organism is aspergillums, a fungus ubiquitous in ceiling and wall spaces where dust has accumulated. Activities that disturb accumulation of dust may cause fungal spores to become airborne, inhaled by the susceptible individual and cause disease.

2. Patients at risk include those with congenital or acquired immunodeficiency, premature neonates and those receiving immunosuppressive therapy.

3. Activities that disturb the environment where settled dust is found may cause spores to become airborne and increase risk for nosocomial infection. Activities include:
   - Demolition, grading or remodeling
   - Exposure of ceiling spaces
   - Storage and removal of uncovered or partially covered debris from construction areas.
4. See Section 3.01 for Infection Control planning and implementation requirements for this project.

H. Project Inspector

1. Provision of inspectors by the AGENCY, and/or by Office of Statewide Health Planning and Development (OSHPD) pursuant to provisions of this section shall be subject to following:
   a. Contractor shall allow inspectors full access to project at all times Work is in progress.
   b. Contractor shall not take any direction, approvals or disapprovals from inspectors.
   c. Contractor shall not rely on inspectors to ensure Work is completed in accordance with Contract documents.
2. Acts or omissions of any inspector (including, without limitation, inspector's failure to observe or report deficiencies in Contractor's Work) shall not relieve Contractor from its responsibility to complete Work in accordance with Contract documents.

I. Covid 19 Requirements

1. Masks shall be worn at all times within the project site and within the medical facilities.
2. Contractor shall take temperatures of all personnel and visitors to the site and keep a daily log.
3. Anyone entering the hospital entrances will be screened by VCMC staff.
4. Notify the AGENCY if anyone tests positive for Covid and was suspected of having the virus while on the jobsite.

PART 2 - PRODUCTS (NOT USED)

PART 3 - EXECUTION

3.01 INFECTION CONTROL

A. Infection Control Risk Assessment (ICRA). See the Project Infection Control Pre-Construction Risk Assessment, located after the Special Provisions.

1. AGENCY implements the infection control risk assessment process instituted by the Center for Disease Control (CDC). This process identifies the Type of Construction Project Activity (Type A-D), the Patient Risk Groups that will be affected and the Class of Infection Control Precautions that are warranted. The VCMC Pediatric Unit Project is:

a. Type C - Work that generates moderate to high levels of dust or requires demolition or removal of any fixed building components or assemblies.
b. Class II Precautions - Patient Low Risk where barriers are in place separating work area from occupied spaces (See CDC Patient Risk Table).
c. Class III Precautions - Patient Medium Risk (See CDC Patient Risk Table).
d. Class III/IV Precautions - Patient High Risk (See CDC Patient Risk Table).

CDC Patient Risk Table

Low Risk	Medium Risk	High Risk	Highest Risk
Vacant spaces Office areas	Occupied Corridors	Emergency Dept., including corridors within E.D.	None

2. An ICRA permit is a check list of applicable controls warranted during the construction for the project. The permit will be issued at the end of a one hour discussion on the project. The parties present during this meeting are:
a. VCMC Infection Control Nurse
b. VCMC Representative
c. AGENCY Representatives
d. Contractor's Representative

B. General Safe Work Practices

1. The subject work areas will be restricted to authorized visitors and personnel. Workers will be required to have attended an infection control training meeting prior to working on the site. All contractors, vendors and staff are required to follow the precautions defined in the ICRA.
2. The work area must be left free from accumulation of waste and rubbish at the end of each work shift.
3. The handling, containerization and disposal of hazardous wastes shall be performed in accordance with all applicable county, state and federal regulations, including but not limited to Title 22 of the California Code of Regulations and Titles 40 and 49 of the Code of Federal Regulations.

C. Inspections

1. Ventura County Public Works AGENCY (VCPWA) is responsible for Inspection and all regulatory compliance of the construction of the work. This includes construction compliance with the requirements of the ICRA permit. VCPWA will ensure their employees, vendors and any other ancillary personnel under their supervision comply with the requirements of the ICRA permit.

D. The Contractor shall implement the conditions of approval identified through the ICRA permit issued by the Infection Control Officer. The Contractor shall incorporate these requirements into their Quality Control Plan.

E. ICRA conditions of approval may include, but are not limited to, the following requirements:

1. Develop and implement an appropriate airborne testing program for fungi and respirable dust including baseline, construction and post-construction measurements.
2. Disturbed or removed materials shall be cautiously removed, contained and immediately removed to the Contractor's rubbish containment area.
3. The following Table provides a list of typical infection control precautions. Many of these precautions are standard practice.

Infection Control Precautions	
Minimizing street dust	Schedule regular street cleaning to minimize traffic dust.
Clean HVAC system	See Campus Standards & Specs
Delivery of Interior Materials (drywall, paneling, ceiling tiles, framing lumber, casework, etc)	All Interior Materials shall be free from excess moisture, mold and any other damage prior to installation. Damaged materials will be removed from the site and shall not be installed. Protective measures include: ▪ Schedule delivery of material when conditions are such that adequate weather protection has been established. ▪ Provide dry storage of materials-off ground, away from moisture sources. ▪ Minimize storage time. ▪ Plastic sheeting or tarps used to cover materials are secured loosely to allow air circulation.
Dry Wall Placement	Dry wall installation shall comply with UL listed assembly; specification to include installation at about 1/4 to 1/2 inch off the slab for minimizing water wicking when it is spilled during construction and after occupancy. Assure proper caulking of gap under drywall for acoustical or fire rating.
Notification to Owners of Water Damage	Contractor will notify AGENCY of any water damage to building and plan for repair.
Drying Equipment Access	Prearrange for drying equipment access to use if water intrudes into building
Removal of Debris & Dust	▪ Construction areas will be kept free from debris, trash, excessive dust, etc. and will be monitored daily. ▪ Provide for proper disposal of food waste during construction. ▪ Provide sufficient portable restroom facilities for workers during construction; keep clean and well-maintained. ▪ No waste disposal of any kind in walls.

Table 2 – Infection Control Measures for Internal Construction & Repair Projects (Adapted from CDC Guidelines Table 9)

Item	Recommendation
Prepare for the Project	Use a multi-disciplinary team approach to incorporate infection control into the project. Conduct the risk assessment and a preliminary walk-through with project managers and staff.
Issue Hazard & Warning Notices	Post signs to identify construction areas and potential hazards. Mark detours requiring pedestrians to avoid the work area.
Relocate High-Risk Patients as Needed, If work is in or Adjacent to a PE	Identify target patient populations for relocation based on the risk assessment. Arrange for the transfer in advance to avoid delays. At-risk patients should wear protective respiratory equipment (e.g., a high-efficiency mask) when outside their Protective Environment (PE) rooms.
Establish Alternate Traffic Patterns for Staff, Patients, Visitors & Construction Workers	Determine appropriate alternate routes from the risk assessment. Designate areas (e.g., hallways, elevators, and entrances/exits) for construction worker use. Do not transport patients on the same elevator with construction materials and debris.
Erect Appropriate Barrier Containment	Use fire retardant prefabricated plastic units or plastic sheeting for short-term projects that will generate minimal dust. Use durable rigid barriers for ongoing, long-term projects.
Establish Proper Ventilation / Remodel Construction	Shut off return air vents, if possible, and seal around grilles. Exhaust air and discharge to the outside, if possible. If re-circulated air from the construction zone is unavoidable, use a pre-filter and a HEPA filter before the air returns to the HVAC system. When vibration-related work is being done that may dislodge dust in the ventilation system or when modifications are made to ductwork serving occupied spaces, install filters on the supply air grilles temporarily. Set pressure differentials so that the contained work area is under negative pressure. Use air flow monitoring devices to verify the direction of the air pattern. Monitor temperature, air changes per hour (ACH), and humidity levels (humidity levels should be <65%). Use portable, industrial grade HEPA filters in the adjacent area and/or the construction zone for additional ACH. Keep windows closed, if possible.
Control Solid Debris	When replacing filters, place the old filter in a bag prior to transport and dispose as a routine solid waste. Clean the construction zone daily or more often, as needed. Designate a removal route for small quantities of solid debris. Mist debris and cover disposal carts before transport (i.e., leaving the construction zone). Use window chutes and negative pressure equipment for removal of larger pieces of debris while maintaining pressure differentials in the construction zone. Schedule debris removal to periods when patient exposure to dust is minimal.
Control Water Damage	Make provisions for dry storage of building materials. Do not install wet, porous building materials (i.e., sheet rock). Replace water-damaged porous building materials if they cannot be completely dried out within 72 hours.
Control Dust in Air and on Surfaces	Monitor the construction area daily for compliance with the infection-control plan. Protective outer clothing for construction workers shall be removed before entering clean areas. Use mats with tack surfaces within the construction zone at the entry; cover sufficient area so that both feet make contact with the mat while walking through the entry. Clean the construction zone and all areas used by construction workers with a wet mop. If the area is carpeted, vacuum daily with a HEPA-filter equipped vacuum. Provide temporary essential services (e.g., toilets) and worker conveniences (e.g., vending machines) in the construction zone as appropriate. Damp-wipe tools if removed from the construction zone or left in the area. Ensure that construction barriers remain well sealed; use particle sampling as needed. Ensure that the clinical laboratory is free from dust contamination.
Complete the Project	Flush the main water system to clear dust-contaminated lines. Terminally clean the construction zone, by vacuuming with HEPA-filtered vacuum and mopping with disinfectant, before the construction barriers are removed. Check for visible mold/mildew and eliminate if present. Verify appropriate ventilation parameters for the new area as needed. Do not accept ventilation deficiencies, especially in special care areas. Clean or replace HVAC filters using proper dust-containment procedures. Remove the barriers and clean the area of any dust generated during this work. Ensure that the designated air balances in the operating rooms (OR) and protective environments (PE) are achieved before occupancy. Commission the space as indicated especially in the OR and PE, ensuring that the room's required engineering specifications are met.

END OF SECTION

This Page Left Blank Intentionally

SECTION 01 14 13
ACCESS TO THE SITE

PART 1 - GENERAL

1.01 SUMMARY

A. This Section Includes:

1. Access to the Project Site
2. Vehicular Site Access
3. Site Restrictions
4. Coordination with Occupants
5. Work Site Restrictions
6. Contractor Work Rules

B. Related Requirements:

1. Section 01 50 00 for limitations and procedures governing temporary use of the Owner's facilities.

1.02 ACCESS TO THE PROJECT SITE

A. General: The Contractor has limited use of the project site for construction operations as indicated on Drawings by the Contract limits and as indicated by requirements of this Section.

B. Use of the Site: Limit use of the project site to areas within the Contract limits indicated. Do not disturb portions of the project site beyond areas in which the work is indicated.

C. Existing Building Condition: Maintain portions of the existing building affected by construction operations in a weathertight condition throughout construction period. Repair damage caused by construction operations.

1.03 VEHICULAR SITE ACCESS

A. Driveways, Walkways and Entrances: Keep driveways, parking garage, loading areas and entrances serving the premises clear and available to the Owner, the Owner's employees and emergency vehicles at all times. Do not use these areas for parking or for materials storage.

1. Schedule deliveries to minimize the use of driveways and entrances for construction operations.
2. Schedule deliveries to minimize space and time required for onsite materials and equipment storage.

B. Truck and Equipment Access:

1. Limit delivery, pick-up and standby activities to areas designated by the Owner.
2. To avoid traffic conflict with the Owner's or Owner’s employees and the general public, and to avoid overloading streets and driveways elsewhere on the project site, or adjacent

to the project site, limit truck and equipment access to those routes (a) designated by the Owner and (b) acceptable to the AHJ.
3. Protect from damage all curbs and sidewalks over which trucks and equipment pass to access the project site.

C. Contractor's Vehicle Access and Parking: Contractor vehicles, Contractor's employees' vehicles and all other vehicles entering and exiting the project site for construction operations may:

1. Only Use entrances, routes and exits designated by the Owner
2. Only Park in those areas designated by the Owner and may not park on any other street or in any other project site area

1.04 SITE RESTRICTIONS

A. Restrict access of all persons entering the project site for construction operations to the access routes and to other areas designated by the Owner and to the limits of the work.

1.05 COORDINATION WITH OCCUPANTS

A. Full Owner Occupancy: The Owner will occupy the site and existing buildings during the entire construction period. Cooperate with the Owner during construction operations to minimize conflicts and facilitate the Owner's usage, perform the work in a manner that does not to interfere with the Owner's day-to-day operations and maintain existing exits unless otherwise indicated.

1. Maintain access to existing walkways, corridors and other adjacent occupied or used facilities. Do not close or obstruct walkways, corridors, or other occupied or used facilities, or portions of facilities, without prior written authorization from the Owner and approval of the AHJ.
2. Notify the Owner at least 7-hours in advance of activities that affect the Owner's operations and usage.

B. Partial Owner Occupancy: The Owner will occupy the premises during the entire construction period, with the exception of those areas under construction. Cooperate with the Owner during construction operations to minimize conflicts and facilitate the Owner's usage; perform the work in a manner that does not to interfere with the Owner's day-to-day operations; maintain existing exits unless otherwise indicated.

1. Maintain access to existing walkways, corridors, and other adjacent occupied or used facilities. Do not close or obstruct walkways, corridors, or other occupied or used facilities, or portions of facilities, without prior written authorization from the Owner and approval of the AHJ.
2. Notify the Owner at least 72-hours in advance of activities that affect the Owner's operations and usage.

C. Owner Limited Occupancy of Completed Areas of Construction: The Owner may occupy place or install equipment in completed portions of the project prior to Substantial Completion, as long as such occupancy or equipment does not interfere with the Contractor's completion of the work, as determined by the Contractor. Early placement of equipment or limited occupancy by the Owner does not constitute the Owner's acceptance of the total project.

1. For each specific portion of the work occupied prior to the Owner's acceptance of the completed work, the Architect prepares a Certificate of Substantial Completion.
2. Before Limited Owner occupancy:

    a. Certificate of Occupancy from the AHJ must be obtained
    b. Mechanical and Electrical Systems must be fully operational
    c. Required Tests and Inspections must be successfully completed

3. Upon Limited Owner occupancy, the Owner VCSS 7-10.2

    a. The AGENCY will provide a letter of Beneficial Occupancy
    b. Operates and maintains the Mechanical and Electrical Systems serving occupied portions of the project
    c. Assumes responsibility for maintenance and custodial service for the occupied portions of the project.

D. Phasing and sequencing of the work shall be done in a manner to accommodate use of the facilities by the patients and staff during construction. Contractor shall plan for in their daily schedule the potential re-sequencing of work to accommodate the needs of the facility. Should the needs of the staff and/or patients require that the contractor stop work in a specific area, the Contractor shall stop work in that area, and move to another location to continue work that does not interfere with the facilities' operations. This re-sequencing shall be at no additional cost, or additional time, to the contract unless the Contractor can demonstrate that the area of work that is being impacted is on the critical path.

1.06 WORK RESTRICTIONS

A. General:

1. Comply with construction operations restrictions.
2. Comply with limitations on use of public streets and with other requirements of the AHJ.

B. On-Site Work Hours: Unless otherwise indicated or authorized by the Owner, limit work in the existing building to Monday through Friday during normal business working hours between 8 AM and 5 PM.

1. Weekend Hours: To be approved in advance by the AGENCY's Representative.
2. Early Morning Hours: AGENCY to determine whether it is unlikely to affect adjacent campus activities, neighbors and personnel.
3. Hours for Utility Shutdowns: Shall be during off hours or weekends unless otherwise approved by the AGENCY's Representative.
4. Hours for Core Drilling and other noisy activity: Refer to Section 01 14 01, Instructions to Contractors Working at VCMC, for noise control requirements.

C. Existing Utility Interruptions: Do not interrupt utilities serving facilities or portions of facilities occupied by the Owner or others, unless authorized under the following conditions and only after providing temporary utility services that conform to the requirements indicated.

1. Notify the Owner at least (14) fourteen business days in advance of proposed utility interruptions.
2. Obtain the Owner's written authorization prior to proceeding with utility interruptions.

D. Noise, Vibration and Odors: Coordinate all operations with the Owner that may result in high levels of noise and vibration, odors and other disruption to the Owner occupancy.

1. Notify the Owner at least (2) two business days in advance of proposed disruptive operations.
2. Obtain the Owner's written authorization before proceeding with disruptive operations.

E. Nonsmoking Building: Per County of Ventura Ordinance 4502, Section 6707, smoking and tobacco product use is prohibited on County campuses.

F. Controlled Substances: The use of tobacco products and other controlled substances on the project site is prohibited.

G. Employee Identification: Provide identification tags for the Contractor personnel working on the project site. Contractor personnel are required to use identification tags at all times.

H. Employee Screening: Comply with the Owner's requirements for drug and background screening of all personnel working on the project site that are involved with construction operations.

1. Maintain a list with the Owner's representative of screened and approved personnel.

I. COVID Screening: CDC guidelines and California State requirement concerning COVID screening, masking, testing and quarantine shall be followed.

1. CDPH requirements for medical facilities shall be followed. Contractor to provide required vaccination and/or testing records within 48-hours of CDPH request.

J. Additional Information: Refer to the following documents for requirements that may impose additional onsite work restrictions:

1. Section 01 14 01, Instructions to Contractors Working at VCMC.
2. Please visit: www.cdph.ca/gov for latest COVID requirements.

1.07 CONTRACTOR WORK RULES

A. All Contractors, Contractor’s employees and other persons entering the project site for construction operations, must comply with the following:

1. Lunch boxes, tool bags/boxes and all other containers are subject to inspection upon entering or exiting the project site.
2. Everyone must sign in and out on a daily basis. If required by the Owner, provide identification tags for the Contractor personnel working at the project site. Contractor personnel are required to use identification tags at all times.
3. Everyone working at the project site must eat and take breaks only in areas designated by the Owner.
4. Contractor is responsible for the protection of Owner's, the Owner’s employees and tenant equipment and merchandise during both demolition and construction.
5. The Contractor provides all flagging, barricades and safety equipment for all personnel and the general public while working in construction areas.
6. Whenever using a torch, welding, or working with combustibles, a charged and fully functioning fire extinguisher must be adjacent, visible, and readily accessible to the work being performed. All welding activities must be fully screened from the public’s view.
7. The Contractor shall ensure all sprinkler heads and motion detectors are protected before spraying ceilings.

8. Unsafe work practices, including horseplay, failure to utilize safety equipment and other activities that endanger other workers, the Owner's personnel, the general public, or anybody else at the project site, are prohibited.
9. Vandalism, theft, drinking alcoholic beverages, the use of illicit drugs, and other counterproductive behavior, including cursing, are prohibited.
10. Trash may only be removed through designated exits.
11. The Contractor shall maintain reasonable dress code standards. Sandals, cut-offs, shorts, string T-shirts, and not wearing a shirt are prohibited.

PART 2 - PRODUCTS (NOT USED)

PART 3 - EXECUTION (NOT USED)

END OF SECTION

SECTION 01 25 00
SUBSTITUTION PROCEDURES

PART 1 - GENERAL

1.01 SUMMARY

This Section Includes:

A. Administrative and Procedural Requirements for Substitutions After the Contract Award and During the Construction Phase.

B. Related Requirements:

1. Ventura County Standard Specification Section 4-1.6

1.02 REFERENCES

A. Definitions:

1. Substitutions: Contractor suggested changes to products, materials, equipment, systems, assemblies and methods of construction from those required by the Contract Documents to similar items that are not necessarily identical but are still alike with respect to appearance and performance.
2. Proposed Substitutions: Substitutions proposed and considered during the bidding period that are allowed, provided the bidder indicates the difference in cost that results if the substitution request is accepted.

   a. Bid prices for each substitution request include all costs required to incorporate the substitution into the project.
   b. Later requests for additional costs for substitutions are not considered.

3. Controlled Substitutions: Substitutions proposed and considered during the construction period that are allowed under procedures specified in this Specification Section.

   a. Substitutions for Cause: Contractor suggested changes resulting from changing project conditions, such as product unavailability, regulatory change, or unavailability of required warranty terms.
   b. Substitutions for Convenience: Contractor and Owner suggested changes that are not necessary to meet project requirements, but may offer an advantage to the Contractor or the Owner.

1.03 ADMINISTRATIVE REQUIREMENTS

A. Substitution Requests:

1. The AGENCY will consider only formal requests for substitution prepared by the Contractor on an approved substitution request form for items and fabrication or installation methods in lieu of those specified when:

   a. In the Contractor’s opinion, the specified product or process will not fulfill the design intent.

b. Contractor ascertains the specified product is unavailable, as evidenced by written documentation that firm orders were placed in a timely manner or that the unavailability is due to strike, lockout, bankruptcy, discontinuance of manufacture or an act of God.

2. The AGENCY will not consider substitutions when:

   a. Indicated or implied on RFIs, shop drawings or project data submittals, without additional requests submitted on an approved substitution request form in conformance with the requirements of this Section.
   b. Requested directly by a subcontractor or supplier.
   c. Acceptance requires substantial revision of Contract Documents.

3. By issuing a substitution request, the Contractor is stating:

   a. The Contractor has investigated the substitute item or method and has determined that it is equal to, or superior, in all respects, to the originally specified item or method, and that it will perform the intended function.
   b. The same warranties are provided for the substitution request item or method as the originally specified item or method, without exception or limitation.
   c. The Contractor shall coordinate the installation of accepted substitutions into the Work, making such changes to adjacent materials as required to make the Work complete in all respects, without redesign of adjacent items and supporting materials.
   d. The Contractor waives all claims for extensions of time or time/sequence related, intended or unintended consequences, including additional costs that subsequently arise.
   e. All cost data is complete and includes all related costs under the Contractor's Contract but excludes development and implementation costs incurred by the AGENCY.
   f. The Contractor will pay all redesign and other costs resulting from substitution.
   g. Acknowledgement and acceptance to these provisions in the request.

B. Compatibility: Investigate and document the compatibility of substitutions with related products and materials. Engage a qualified testing agency to perform compatibility tests recommended or required by the manufacturers.

C. Approval or Rejection: Approval or rejection of a substitution is final, the decision of which is the sole discretion of the Owner and the Architect, and includes consideration of the following factors, among others, in comparing the equality of substitutions with all originally indicated or -specified requirements.

   1. The quality of materials, structural strength, construction, fabrication, and performance.
   2. Final appearance, finishes, and surface characteristics.
   3. The supplier’s, fabricator’s, manufacturer’s history, track record, or reputation.
   4. Installation is as originally specified or approved alternate installation method.
   5. Impact on adjoining or related work. Arrangements resulting in acceptance a substitution include equal in appearance, convenience, and practicality to original arrangements.
   6. Availability of replacement parts and maintenance services.
   7. Ease of maintenance, repair, cleaning, adjusting, and re-finishing.
   8. Code approvals and service history.

D. Resubmittal: Do not resubmit previously rejected substitution requests in a modified form.

   1. Upon rejection of a substitution request, the Contractor may submit a different substitution within the specified time limits.

2. If a second a substitution request is rejected or is not received by the Architect within specified time limits, provide the original item or method as specified, and without substitution.

E. Conformance: Acceptance of substitution requests does not relieve the Contractor from conformance to the Contract Documents. The Contractor bears all additional expenses resulting from approved substitutions, and those expenses resulting from approved substitutions affecting adjoining or adjacent work.

F. Unauthorized Substitutions: Substitute items installed without prior written approval are considered defective work. At no additional cost to the Owner, remove and replace defective work and install the originally specified item.

1.04 SUBMITTALS

A. Substitution Requests: Submit for consideration the substitution request on the web-based construction management program. Identify originally specified and substitution request items, or fabrication or installation methods. Include the Specification Section Number and title, and the Drawing Numbers and Titles.

1. Substitution Request Form: Use the PWA Substitution Request form.
2. Documentation: As evidence that substitution requests conform to the originally specified requirements, submit the following, as applicable.

a. A statement indicating why the specified item or installation cannot be provided, if applicable.
b. Coordination information necessary to accommodate the substitution request, including a list of changes, modifications, or revisions to other parts of the work, and to construction performed by the Owner and separate contractors.
c. A detailed line-by-line comparison of significant qualities, salient properties, and performance of the substitution request with the originally specified items. Include an annotated copy of the applicable Specification section.

1) Significant qualities may include attributes such as performance, weight, size, durability, visual effect, sustainable design characteristics, warranties, and specific features and requirements indicated.
2) Indicate deviations, if any, from the specified requirements.

d. Product Data, including drawings and descriptions of products; and fabrication and installation procedures.
e. Samples, where applicable or requested.
f. Certificates and qualification data, where applicable or requested.
g. A list of similar installations for completed projects with project names and addresses, and the names and addresses of the architects and owners.
h. Material test reports issued by a qualified testing agency indicating and interpreting test results for conformance to the specified requirements.
i. Research reports issued by ICC-ES evidencing conformance with the building code in effect for project,
j. A detailed comparison of the Contractor's construction schedule using the substitution request versus the specified items, including the overall effect on the Contract Time. If the specified item or method of construction cannot be provided within the Contract Time, include a letter from manufacturer, on manufacturer's letterhead, stating the date of receipt of the purchase order, lack of availability, or delays in delivery.
k. Cost information, including a proposal for change, if any, to the Contract Sum.

l. The Contractor's certification that the substitution request conforms to the requirements of the Contract Documents, except as indicated in the substitution request; is compatible with related materials; and is appropriate for the applications indicated.
m. The Contractor's waiver of rights to additional payment or time that may subsequently become necessary because of failure of the substitution request to produce indicated results.

3. AGENCY's Action: When necessary, the AGENCY requests additional information or documentation for evaluation within (7) seven calendar days of receiving a substitution request. The AGENCY notifies the Contractor of acceptance or rejection of the substitution request within (15) fifteen business days of receipt of receiving a substitution request, or within (7) seven calendar days of receiving additional information or documentation, whichever is later.

   a. A Change Order, Construction Change Directive, or Architect's Supplemental Instructions for minor changes in the work must be issued as acceptance of a substitution request. No exceptions.
   b. Provide the originally specified item or method if the Architect does not make a decision on the use of a substitution request within time allocated for a response.

PART 2 - PRODUCTS

2.01 SUBSTITUTIONS

A. General:

1. Failure of the Contractor to submit substitution requests for approval in the manner indicated above and within the prescribed time indicated below is sufficient cause for the AGEENCY to reject such substitution.
2. If a substitution request is submitted after the time periods indicated below, the AGENCY, at its sole discretion, may still agree to review such substitution, in which case the Architect's reasonable expenses for such reviews are be paid by the Contractor and are deducted from the Contract Sum, as approved by AGENCY.

B. Substitutions for Cause: Submit requests for substitution promptly upon discovery of a perceived need for change, but at least (15) fifteen business days before to the time required to prepare and review of related submittals.

1. The AGENCY considers the Contractor's request for substitution only when all of the following conditions are satisfied. If the following conditions are not satisfied, the AGENCY returns requests for substitution without action, except to record nonconformance with these requirements.

   a. The requested substitution conforms to the Contract Documents and produces the indicated results.
   b. The requested substitution provides sustainable design characteristics that the specified product provided.
   c. The requested substitution is fully documented on the approved substitution request form and properly submitted.
   d. The requested substitution does not adversely affect the Contractor's construction schedule.
   e. The requested substitution has all current and necessary approvals from the AHJ.

f. The requested substitution is compatible in all respects with other portions of the work.
g. The requested substitution is fully coordinated with other portions of the work.
h. The requested substitution provides the minimum specified warranty or warranties.

2. If the requested substitution involves more than one contractor, then the requested substitution is also:

a. Coordinated with other portions of the Work
b. Uniform and consistent
c. Compatible with other products
d. Acceptable to all other involved contractors

C. Substitutions for Convenience: Not permitted unless otherwise indicated.

D. Substitutions for Convenience: The AGENCY considers requests for substitution if received within 30 calendar days after commencement of the work, the Notice to Proceed, or the Notice of Award, whichever occurs first.

1. The AGENCY considers the Contractor's request for substitution only when all of the following conditions are satisfied. If the following conditions are not satisfied, the Architect returns requests for substitution without action, except to record nonconformance with these requirements.

a. The requested substitution offers the AGENCY a substantial advantage in cost, time, energy conservation, or other consideration, after deducting additional responsibilities the AGENCY must assume, including additional compensation to the Architect for redesign and evaluation services, increased cost of other construction by the AGENCY, and similar considerations.
b. The requested substitution does not require extensive revision to the Contract Documents.
c. The requested substitution conforms to the Contract Documents and produces the indicated results.
d. The requested substitution provides sustainable design characteristics that the specified product provided.
e. The requested substitution is fully documented on the approved substitution request form and properly submitted.
f. The requested substitution does not adversely affect the Contractor's construction schedule.
g. The requested substitution has all current and necessary approvals from the AHJ.
h. The requested substitution is compatible in all respects with other portions of the work.
i. The requested substitution is fully coordinated with other portions of the work.
j. The requested substitution provides the minimum specified warranty or warranties.

2. If the requested substitution involves more than one contractor, the requested substitution is also:

a. Coordinated with other portions of the Work
b. Uniform and consistent
c. Compatible with other products
d. Acceptable to all contractors involved

3. Requests must be received by the AGENCY no later than (30) thirty days after Notice to Proceed or (30) thirty days prior to when item was scheduled for submission under Section 01 29 73.

E. Substitution requests will not be considered during bidding.

PART 3 - EXECUTION (NOT USED)

END OF SECTION

SECTION 01 26 00
CONTRACT MODIFICATION PROCEDURES

PART 1 - GENERAL

1.01 SUMMARY

This Section Includes:

A. Administrative and Procedural Requirements for Handling and Processing Contract Modifications.

B. Related Requirements:

1. Section 01 21 00 for administrative procedures for the preparation of Change Order Proposals for adjusting the Contract Sum to reflect actual costs of allowances.
2. Section 01 22 00 for administrative procedures for the preparation of Change Order Proposals for adjusting the Contract Sum to reflect the measured scope of unit-price work.
3. Ventura County Standard Specification Section 3-1 for County of Ventura procedures for changes in work.

1.02 REFERENCES

A. Definitions:

1. Proposal Request: Request to determine the effect of a proposed change in the work to the Contract Sum or the Contract Time.

   a. Work Changes Proposal Request: Owner-initiated changes to the work that may require adjustment to the Contract Sum or the Contract Time.
   b. Change Order Proposal Request: Contractor-initiated changes to the work related to latent or changed conditions that might require adjustment to the Contract Sum or the Contract Time.

2. Change Order: The process by which work agreed to by the AGENCY is added to or deleted from the original Contract scope of work that might require adjustment to the Contract Sum or the Contract Time.

1.03 PROPOSAL REQUESTS

A. Owner-Initiated Proposal Requests: The AGENCY issues Work Changes Proposal Requests to the Contractor via Web-based Construction Management, “Change Order Requests. If necessary, the description includes supplemental or revised Drawings and Specifications.

1. Change Order Requests issued by the AGENCY are not instructions to either stop the work in progress or to execute the proposed change.
2. Within the (20) twenty business days after receipt of the Change Order Request, when not otherwise specified, submit estimate of probable cost adjustments to the Contract Sum and Contract Time that are necessary to execute the proposed change.

a. Include a list of the quantities of items required or eliminated and unit costs, with the total amount of purchases and credits. Furnish survey data to substantiate quantities.
b. Indicate applicable taxes, delivery charges, equipment rental and trade discount amounts.
c. Include labor and supervision costs directly attributable to the proposed change.
d. Include an updated Contractor's construction schedule indicating the effect of the change, including changes in activity duration, start and finish times and activity relationships. Use available total float before requesting an extension of the Contract Time.

B. Contractor-Initiated Change Order Requests: The Contractor initiates a claim to modify the Contract by submitting a Change Order Request Proposal to the AGENCY.

1. Furnish a complete description of the proposed change, including a statement outlining the reasons for the proposed change, the effect of the change on the work and on the Contract Sum and Contract Time.
2. Include a list of the quantities of items required or eliminated, and unit costs, with the total amount of purchases and credits. Furnish survey data to substantiate quantities.
3. Indicate applicable taxes, delivery charges, equipment rental and trade discount amounts.
4. Include labor and supervision costs directly attributable to the proposed change.
5. Comply with requirements of Section 01 25 00 if the change order proposal request requires the substitution of an item from what was originally specified.

1.04 CHANGES IN WORK

A. Reference VCSS 3.2.2.3 See additional requirements below.

a. Work by Contractor: The following percentage shall be added to the Contractor's costs and shall constitute the markup for all overhead and profits and all other cost not specifically provided for:

(1) Labor	15%
(2) Materials	15%
(3) Equipment Rental	15%
(4) Other Items and Expenditures	15%

To the sum of the cost and markups provided in this section, 1% shall be added as compensation for bonding.

b. When all or any of the Extra Work is performed by a Subcontractor, the markup established above shall be applied to the Subcontractor's actual cost of such work. A mark up of 10% on the first $5,000 of the subcontractor's portion of the Extra Work and the markup of 5% on work in excess of $5,000 of the subcontracted portion of the Extra Work may be added by the Contractor.

B. Refer to VCSS Section 3 and add the following sub-section:

3-6 CHANGE ORDERS

3-6.1 Signed Change Orders. By signing the Contract Change Order (CCO), the Contractor agrees to the total cost and time, if applicable, of the contract modification and will accept as full payment for all costs related in any way to the signed Change Order. This shall also constitute full compensation for any extended Overhead or General Condition costs attributed as a result of this change.

PART 2 - PRODUCTS (NOT USED)

PART 3 - EXECUTION (NOT USED)

END OF SECTION

SECTION 01 26 13
REQUESTS FOR INFORMATION

PART 1 - GENERAL

1.01 SUMMARY

This Section Includes:

A. Administrative and Procedural Requirements for Requests for Information.

B. Form to be completed in Web-Based Construction Management Program and submitted by the Contractor requesting clarification of a portion of the Contract Documents, hereafter referred to as RFI.

C. Related Requirements:

1. Ventura County Standard Specifications
2. Section 01 31 23 for Web-Based Construction Management
3. Section 01 26 00 for Contract Modification Procedures

1.02 REFERENCES

A. Abbreviations and Acronyms:

1. RFI: Contractor's Requests for Information

B. Definitions:

1. Out of Sequence: A task indicated on the submittal and construction schedule that is (a) performed outside of the particular order in which project milestones, events, movements, or other activities follow each other or (b) begun before its predecessor is started.
2. Reasonably Inferable: If an item, system or assembly, including components, accessories and facility services, is either indicated or specified, then all material, labor, equipment and facility services that are (a) normally furnished with such items, systems, or assemblies and (b) that are necessary to make a complete installation, must be provided whether or not indicated or specified.

   a. Items the Contractor either could or should have reasonably anticipated must be included as part of the work, based on (1) the Contractor's skill, knowledge, and experience; and (2) using an objective industry standard and not a subjective standard.
   b. Only those items specifically excepted may be omitted from the project.

3. Request for Information: Procedure used by the AGENCY or the Contractor when it is necessary to confirm the interpretation of a detail, specification or note on the Drawings, or to secure a documented directive or clarification from the AGENCY that is needed in executing the work. Other terms, including "request for interpretation" and similar terms, are synonymous with "request for information".

1.03 ADMINISTRATIVE REQUIREMENTS

A. Submit an RFI to the AGENCY when:

1. An unforeseen condition occurs
2. Questions regarding design intent of the Contract Documents or constructability arise
3. Clarification of information contained within the Contract Documents, or supplementary information not contained within the Contract Documents is required
4. An interpretation of the Contract Documents, including that of apparent conflicts, is necessary

B. Do not use RFIs to:

1. Confirm existing information contained in Contract Documents without providing any reason the existing information may be invalid
2. Confirm or request information provided in a previous RFI
3. Request approval of proposed substitutions
4. Request approval of submittals
5. Solicit comments or clarifications for any submittal or shop drawing review transmitted by the AGENCY to the Contractor
6. Request contract modifications
7. Confirm actions taken by the Contractor for requested contract modifications
8. Transfer coordination responsibility from the Contractor to the AGENCY
9. Request the AGENCY accept deviations from the Contract Documents for any reason
10. Request the AGENCY accept non-conforming work

C. RFIs that fail to conform to the above restrictions are considered frivolous and are identified as such by the AGENCY, whose decision is final.

1. The Contractor shall promptly remove frivolous RFI's from the RFI log.
2. The AGENCY may assess the Contractor for any time and material costs incurred by the AGENCY, the AGENCY's personnel, the Architect, the Architect's consultants, and other individuals responding frivolous RFIs.

D. The RFI log will be maintained by the web-based construction management program.

1.04 PROCEDURAL REQUIREMENTS

A. RFIs shall be submitted through the web-based construction management program.

1. Forms shall be completely filled in as indicated by the AGENCY.
2. RFIs shall be completed filled in as indicated by the AGENCY.
3. Each page of attachments to RFIs shall bear RFI number and shall be consecutively numbered in chronological order.
4. If approved by the AGENCY, the RFI will be closed in web-based construction management program.

B. The Architect considers the Contractor's RFIs only when all of the following conditions are satisfied. If the following conditions are not fully satisfied, then the Architect returns the incomplete RFI without action, except to record nonconformance with these requirements.

1. Each RFI may address only one subject or request.
2. RFIs must be consecutively numbered, each page of the RFI and every attachment to the RFI, must also state the RFI number.
3. Every section of the RFI form must be filled in and complete.

4. Each RFI must include:

    a. Project Name matching that listed on the Contract Documents and the Architect's project number or other identifying number matching that listed on the Contract Documents, if any.
    b. Date the RFI is submitted (not the date the RFI was generated).
    c. Contractor's name, address, telephone and fax numbers.
    d. Drawing numbers and detail references, where appropriate, including the date of each referenced Drawing
    e. Section Number and Title of all affected Specification Section or Sections, including the date of each referenced Specification Section.
    f. A Clear and Concise Question, along with both a summary and explanation, and brief history of the question when these are not self-evident
    g. Supplementary sketches and related documents material to the Contractor's request, and that are for clarification of the issue, including copies of the original subcontractor RFI
    h. A Contractor-recommended solution or response to the requested interpretation or clarification
    i. A blank space for the Architect's written response.

5. When the Contractor anticipates that the Architect's written response to an RFI might necessitate a change the Contract Sum or Contract Time, a properly executed Change Order Proposal Request conforming to the requirements of Section 01 26 00 must also be submitted along with the RFI.

C. Submit RFIs within a reasonable time frame so as not to interfere with or impede the progress of the work.

1. Each RFI must be submitted with such promptness as to not cause any delay in the Contractor's own work, or the work of any subcontractor.
2. Adjustments to the Contract Time or Contract Sum resulting from the Contractor's failure to submit an RFI with sufficient time to allow for the orderly processing of a response by the Architect are prohibited.

D. Allow at least (20) twenty business days in the Contractor's construction schedule for review and response time for each RFI, unless additional time is requested or needed by the AGENCY. The response time is increased when:

1. RFIs that require OSHPD approval shall be left open until HCAI has completed the review and provided approval. The AGENCY has no control of HCAI timelines or schedules.
2. More information from the Contractor is requested by the AGENCY
3. The RFI is submitted out of sequence
4. In the opinion of the AGENCY, more time is needed to respond to the RFI.

    a. The Contractor shall alert the AGENCY in writing of the time available before a response may cause an impact to the Contract Sum or Contract Time.
    b. The Contractor's failure of to alert the AGENCY in writing inures to the benefit of the AGENCY.

1.05 QUALITY ASSURANCE

A. Before submitting RFIs to the AGENCY, verify the interpretation requested is not indicated in the Contract Documents, or cannot be determined from a careful review of the Contract Documents.

1. Carefully study the Contract Documents to ensure requested interpretations are not reasonably inferable therein.
2. RFIs requesting interpretations reasonable inferable from the Contract Documents are returned to the Contractor without review, except to record nonconformance with this requirement.

B. Where field conditions may dictate solutions, provide both an assessment of the potential problem and a suggested solution with each RFI submitted. RFIs that do not include a suggested solution may be returned to the Contractor without review, except to record nonconformance with this requirement.

C. When the Contractor believes that an AGENCY's written response to an RFI might necessitate a change the Contract Sum or Contract Time, the Contractor shall notify the Owner in writing within (5) five business days of receiving the AGENCY's response.

1. RFI responses are not approvals to perform additional or extra work.
2. When the Contractor believes that an AGENCY's written response to an RFI might necessitate a change the Contract Sum or Contract Time, the Contractor shall provide evidence supporting the basis of the Contractor's estimates changes as they relates to the RFI.
3. The Contractor may not proceed with any additional or extra work indicated by the RFI response until a Change Order or other acceptable modification is properly prepared, submitted, and executed in conformance with the requirements of Section 01 26 00.

PART 2 - PRODUCTS (NOT USED)

PART 3 - EXECUTION (NOT USED)

END OF SECTION

SECTION 01 29 73
SCHEDULE OF VALUES

PART 1 - GENERAL

1.01 SUMMARY

This Section Includes:

A. Administrative and Procedural Requirements for Preparing Schedules of Values.

1.02 REFERENCES

A. See VCSS Section 9-2.

B. Definitions:

1. Schedule of Values: Document that breaks down the Contract Sum into smaller, measurable portions, often itemized by specification section. The Schedule of Values is prepared by the Contractor for use as the basis of the Contractor’s applications for payment and used by the AGENCY to observe, measure, and determine percentages of completion.

1.03 ADMINISTRATIVE REQUIREMENTS

A. General:

1. The Contractor shall prepare, produce and update a construction Schedule of Values, including all information required by this Section.

B. Coordination: Coordinate preparation of the Schedule of Values with the preparation of the Contractor's construction schedule.

1. Coordinate line items in the Schedule of Values with other required administrative forms and schedules, including:

   a. Application for Payment Forms with Continuation Sheets
   b. Submittal Schedule
   c. Other items indicated as separate activities in the Contractor's Construction Schedule.

2. Submit the Schedule of Values to the AGENCY at the earliest possible date, but not more than (15) fifteen calendar days after award of contract.
3. Subschedules for Phased Work: Where the work is separated into phases requiring separately phased payments, provide subschedules showing values coordinated with each payment phase.
4. No additional contract time will be given for late schedule of values submittal.

1.04 PROCEDURAL REQUIREMENTS

A. Within (15) fifteen calendar days after award of contract, and in preparation for submittal of a proposed Schedule of Values, the Contractor shall submit to the AGENCY for review and approval a complete cost for all work broken down by trade; a list of all Subcontractors organized by trade, and a complete list of unit prices for all products proposed for installation, tabulated to correspond to the appropriate specification Sections.

   1. Breakout costs for identifying the work of all major trades beginning at the execution of the Contract for Construction and continuing through Acceptance of Substantial Completion by the AGENCY.

B. The proposed Schedule of Values must include:

   1. Costs for work by all major trades, activity, main element or other cost center and each activity, task or sub-activity.
   2. Where more than one designer or subcontractor comprises the work of a work item or activity, the schedule of values shall show a separate line item for each subcontractor.
   3. Breakout costs shall include separate sections with mobilization and General Conditions.

C. Material Cost Components include the delivered cost of product, with taxes paid, and the total quantities of designated materials shown.

   1. Labor cost components include all related installation costs.
   2. Costs involved with Owner-furnished products must be shown as a separate cost item.
   3. All tasks necessary for the execution of the work, beginning with the execution of the Contract for Construction and continuing through acceptance of Substantial Completion by the AGENCY.
   4. The total cost of all items, as well as the columns of their related cost components must be totaled, and the sum of all columns must equal the total Contract Sum.
   5. The following general cost items are to be shown as separate items under Division 01 in the proposed Schedule of Values:

      a. Mobilization Costs
      b. Permits and Fees
      c. Performance and Payment Bonds
      d. Field Coordination, including Engineering, Supervision and Site Layout
      e. Temporary Construction Facilities

D. Upon request by the AGENCY, the Contractor shall provide all requested supporting documentation to substantiate the cost components included in the Contractor's proposed Schedule of Values.

   1. When requested by the AGENCY, the Contractor shall meet with the AGENCY to assist with analysis of the submitted proposed Schedule of Values and determination as to whether additional data, if any, is required.
   2. If requested by the AGENCY, the Contractor shall provide copies of all subcontracts and other required data acceptable to the AGENCY, to substantiate cost components listed.

E. AGENCY will review the breakdown in conjunction with the Progress Schedule to ensure that the dollar amounts of this Schedule of Values are, in fact, reasonable cost allocations for the Work items listed. Upon favorable review by AGENCY, AGENCY will accept this Schedule of Values for use. AGENCY shall be the sole judge of fair market cost allocations.

F. AGENCY will reject any attempt to increase the cost of early activities, i.e., “front loading,” resulting in a complete reallocation of moneys until such “front loading” is corrected. Repeated attempts at “front loading” may result in suspension or termination of the Work for default, or refusal to process progress payments until such time as the Schedule of Values is acceptable to AGENCY.

G. Schedule of Values shall be revised to reflect Change Orders, subject to AGENCY approval.

H. Acceptance of the proposed Schedule of Values by the AGENCY is required before the AGENCY is obligated to make payment on any application for Payment.

1. If rejected, the Contractor shall modify as necessary to resolve the issues identified by the AGENCY, and then resubmit the proposed Schedule of Values within (5) five days of being rejected.
2. Once approved by the AGENCY, the proposed Schedule of Values becomes the Schedule of Values for the work and is used as the basis for processing the Contractor’s Payment Estimates.

1.05 SCHEDULE OF VALUES

A. Format and Content: Use the project manual table of contents as a guide to establish line items for the Schedule of Values. Provide at least (1) one line item for each Specification Section.

1. Identification: Include the following project identification on the Schedule of Values:

a. Project Name and Location
b. The AGENCY’s Specification Number and Project Number
c. The Contractor's Name and Address
d. Date of Submittal

2. Arrange the Schedule of Values in tabular form with separate columns to indicate the following:

a. Related Specification Section or Division
b. Description of the Work

3. Provide a breakdown of the Contract Sum in enough detail to facilitate continued evaluation of applications for payment and progress reports. Coordinate with the project manual table of contents.
4. Round amounts to nearest whole dollar; totals must equal the Contract Sum.
5. Provide a separate line item in the Schedule of Values for each part of the work where applications for payment may include materials or equipment purchased or fabricated and stored, but not yet installed. [See VCSS 9-3.3 for materials that qualify.]
6. Allowances: Provide a separate line item in the Schedule of Values for each allowance.
7. Each item in the Schedule of Values and the applications for payment must be complete. Include the total cost and proportionate share of the general overhead and profit for each item.

a. Temporary facilities and other major cost items that are not a direct cost of actual work-in-place may be shown either as separate line items in the Schedule of Values or distributed as general overhead expense, at the Contractor's option.

1.06 SUBMITTALS

A. The Complete Cost Breakdown, complete list of Unit Prices, and proposed Schedule of Values must be in a format as approved or directed by the AGENCY:
   1. Unless directed otherwise by the AGENCY, use the Specifications Table of Contents as the basis for organizing each cost item under the CSI divisions.
   2. Identify each line with number and description.
   3. Identify each document with the name of the project, location, nature of work, and also provide the name of the Owner, the Architect and the Contractor, as well as the date of submission.

PART 2 - PRODUCTS (NOT USED)

PART 3 - EXECUTION (NOT USED)

END OF SECTION

SECTION 01 31 00
PROJECT MANAGEMENT AND COORDINATION

PART 1 - GENERAL

1.01 SUMMARY

This Section Includes:

A. Administrative Requirements for Coordinating Construction Operations for the Project.

B. Related Requirements:

1. Ventura County Standard Specifications Section 7.

1.02 ADMINISTRATIVE REQUIREMENTS

A. PROJECT SUPERINTENDENT AND PROJECT MANAGER

1. The Contractor shall provide a full-time Project Superintendent on the job site each working day between the contract start date specified in the contract proposal and the acknowledgement of completion of Work specified in VCSS Section 6-8. The Project Superintendent shall have a minimum of (5) five years experience in supervising Office of Statewide Health Planning and Development (OSHPD)/ Department of Health Care Access and Information HCAI projects of similar complexity. The Contractor shall also employ a Project Manager, who is responsible for the supervision of the Project Superintendent, who also has a minimum of (5) five years experience in managing construction of OSHPD/HCAI projects of similar complexity and size to the Work. For each day work is performed at the site between the start date specified in the contract proposal and the acknowledgement of completion of Work specified in VCSS Section 6-8, for which the above required Project Superintendent is not at the job site, or each working day the above Project Manager assigned to this project is not employed by the Contractor, the Contractor will be assessed liquidated damages of $1,100.00 per day. The Project Manager can temporarily act in the capacity of the Project Superintendent in the event of temporary illness, vacation, or emergency to the Project Superintendent. Alternatively, in the event of illness, vacation, etc., a Superintendent may be substituted per the provisions of Section 2, below. These liquidated damages are in addition to those specified elsewhere.

2. The identity and qualifications and references of the Project Superintendent and Project Manager shall be submitted to the AGENCY by the Contractor with the Bid Proposal. Contractor shall reference the OSHPD/HCAI Project Number(s) and Project Title(s) substantiating the listed qualifications in Subsection 1. There shall be no substitution for the project superintendent or project manager identified by the Contractor without prior written approval of such substitution by the AGENCY. Any subsequent Project Superintendent or Project Manager shall have the minimum qualifications set forth above.

B. Coordination: Coordinate the work of all subcontractors.

1. Establish onsite lines of authority and communication
2. Allocate spaces for temporary structures furnished by subcontractors
3. Monitor the use of temporary utilities
4. Administer traffic and parking controls

C. Construction Schedule: Prepare detailed construction schedules as specified in Section 01 32 00 and monitor compliance of all subcontractors with the schedule as the work progresses.

D. Construction Documents Review: Review the Construction Documents and prepare review reports as indicated in the executed Construction Manager at Risk Agreement.

E. Changes:

1. Before submitting to the AGENCY, review subcontractors' requests for information and substitution requests.
2. Submit to the AGENCY all recommendations for necessary or desirable changes in the work.
3. Process Change Orders.

F. Permits and Fees: Verify that subcontractors obtain permits for all required inspections.

G. Submittals: Before submitting to the AGENCY, review subcontractor submittals for conformance to the Contract Documents.

H. Interpretation of Documents: Consult the Architect for Contract Document Interpretations as specified in Section 01 26 13.

1. Assist in resolution of questions that arise.
2. Transmit resolved interpretations in writing to all affected parties.

I. Cleaning: Verify cleaning specified in Section 01 74 00 is performed during progress of the work and at the completion of each stage of the work.

J. Startup:

1. Direct checkout of utilities, operating systems and equipment
2. Assist initial startup testing
3. Record operation start dates of systems and equipment
4. Submit to the Architect a written notice that startup operations and placing of equipment in service is complete

K. Substantial Completion:

1. Upon determination the work is complete, submit a notice to the Architect that the work is ready for final inspection.

L. Final Completion:

1. Secure and transmit all required closeout submittals.

PART 2 - PRODUCTS (NOT USED)

PART 3 - EXECUTION (NOT USED)

END OF SECTION

SECTION 01 31 19
PROJECT MEETINGS

PART 1 - GENERAL

1.01 SUMMARY

This Section Includes:

A. Administrative and Procedural Requirements for Project Meetings, including:

1. Pre-Construction Meeting
2. Weekly Progress Meetings
3. Coordination Meetings
4. Other Meetings

B. Related Requirements: Additional requirements for preinstallation meetings specific to a particular work result are specified within the appropriate specification section

1.02 ADMINISTRATIVE REQUIREMENTS

A. The Contractor shall:

1. Conduct meetings specified in the Contract Documents.
2. For all preinstallation conferences/meetings, Contractor to schedule, arrange, distribute notices and maintain records of conference project meetings conducted during execution of the Contract that are required for the work.
3. Notify and invite the AGENCY and the Architect to all project-related meetings.
4. Attend all project-related meetings scheduled by the AGENCY or the Architect.
5. Schedule, arrange, distribute notices and maintain records of all special meetings when requested by the AGENCY or the Architect.

1.03 PROCEDURAL REQUIREMENTS

A. General: Schedule and conduct meetings and conferences at the project site, unless otherwise indicated.

B. Attendees: Notify all participants, involved parties and individuals whose presence is required, of the date, time and location of each meeting. Also notify the AGENCY and the Architect of scheduled meeting dates and times.

C. Meeting Agenda: Prepare the meeting agenda and distribute agenda to all invited attendees at least (3) three business days before each meeting date.

D. Meeting Minutes: Record all discussions and agreements. Distribute meeting minutes to all concerned parties, including the AGENCY and the Architect, within (3) three business days of each meeting.

E. Revisions to Published Minutes:

1. If the published meeting minutes are not challenged in writing prior to the next regularly scheduled progress meeting, they will be accepted as accurately stating the activities and decisions of the meeting.
2. Individuals challenging the published meeting minutes must submit their changes in writing and distribute their revisions to all attendees/recipients.
3. Challenges to minutes will be discussed and resolved at the next regularly scheduled progress meeting as the first topic of discussion entitled “Old Business”.

1.04 PRECONSTRUCTION MEETING

A. General: Not more than (5) five business days after execution of the Agreement, and before beginning work, AGENCY will schedule a preconstruction meeting at the project site or another convenient location to review responsibilities and personnel assignments.

1.05 WEEKLY PROGRESS MEETINGS

A. General: Attend progress meetings at weekly intervals. Coordinate dates of meetings with the preparation of payment requests.

B. Attendees: The following individuals are required to attend the weekly progress meetings

1. The Contractor’s Project Manager
2. The Contractor's Jobsite Superintendent
3. The AGENCY's Representative
4. The Architect and the Architect’s Consultants, as required by the published agenda
5. Subcontractors, as required by the published agenda

C. Agenda:

1. Review and approve the minutes from the previous progress meeting.
2. Review and determine what progress has been made since the last meeting and

   a. Determine whether each activity is on time, ahead of schedule or behind schedule in relation to the Contractor's construction schedule.
   b. For items that are behind schedule, review and determine necessary to accelerate construction progress and secure firm time commitments from all parties involved in expediting the work.
   c. Discuss and determine whether schedule revisions are necessary to ensure current and subsequent activities will be completed within the Contract Time.

3. Review the status of RFIs and submittals that have not been returned within the minimum time allotted or should have been allotted, in conformance with Section 01 26 00 and Section 01 33 00.

   a. Discuss the status of RFIs and submittals that have not been returned within the time allotted for the Architect's response specified in Section 01 26 00 and Section 01 33 00.
   b. Review the time available before any late response may cause an impact to the Contract Sum or Contract Time.

4. Review other items of significance that may affect construction progress.

   a. Note any field observations, problems, decisions and determinations.
   b. Review any off-site fabrication problems.

c. Review any possible material delivery delays.
d. Develop corrective measures and procedures to regain planned schedule.
e. Revise construction schedule as indicated.
f. Discuss and plan construction progress during next work period.

5. Include topics for discussion as appropriate.
6. Complete other current business.

D. Meeting Minutes: Record conference discussions, agreements and determinations including required corrective measures and actions.

1. Meeting Minutes will be distributed to all attendees and to parties who should have been present.
2. Contractor shall revise the Construction Schedule after each progress meeting where revisions to the schedule have been made or recognized. Contractor to provide an updated schedule concurrently with the agenda of each weekly progress meeting.

1.06 OTHER MEETINGS & PREINSTALLATION CONFERENCE

A. When required for the coordination of the work, the Contractor may convene other meetings to discuss project procedures, coordinate the sequencing of the work, coordinate testing and inspection, coordinate the work of specialty trades, and schedule work by the AGENCY's other contractors:

1. Prepare agenda and make physical arrangements to conduct meetings in a convenient, comfortable room, furnished, as necessary, to accommodate all attendees and to accomplish the purpose of the meeting.
2. Coordinate all meetings in advance with the AGENCY's Representative.
3. Distribute written notices and agendas for all meetings, including regularly scheduled and/or special meetings (3) three days in advance of the meeting date.
4. Preside over meetings.
5. Prepare agendas and minutes of meetings:

a. Document all issues, discussions, decisions and determinations.
b. Distribute copies of minutes to all participants within (48) forty-eight hours after meeting through the Project Management Information System.

END OF SECTION

SECTION 01 31 23
WEB-BASED CONSTRUCTION MANAGEMENT

PART 1 - GENERAL

1.01 SUMMARY

A. The AGENCY and Contractor shall utilize Procore, a Web-based building project management software, for electronic submittal of all data and throughout the duration of the Contract. The Contractor will utilize the AGENCY's Procore account. When required by the AGENCY's Representative, paper documents will also be provided (e.g., the signature of Contract Modifications and submission of Contract Claims). In the event of discrepancy between the electronic version and paper documents, the paper documents will govern.

B. Contractor shall include all costs associated with using this software, including user training, in the Contract bid price. The AGENCY will provide user profiles to the Contractor.

C. Procore is a registered trademark of Procore Technologies, Inc. Microsoft, Internet Explorer, Outlook, Word, and Excel are registered trademarks of Microsoft Corporation in the U.S.A. Adobe and Acrobat are registered trademarks of Adobe Systems Incorporated.

D. The web-based construction management program does not take precedence over the Ventura County Standard Specifications or the contract documents.

1.02 USER ACCESS LIMITATIONS

A. The AGENCY's Representative will control the Contractor's access to Procore by allowing access and assigning user profiles only to accepted personnel. User profiles will define levels of access into the system; determine assigned function-based authorizations (determines what can be seen) and user privileges (determines what they can do). Subcontractors and suppliers may not have direct access to Procore.

1.03 AUTOMATED SYSTEM NOTIFICATION AND AUDIT LOG TRACKING

A. Review comments made (or lack thereof) by the AGENCY on Contractor submitted documentation shall not relieve the Contractor from compliance with requirements of the Contract Documents. The Contractor is responsible for managing, tracking, and documenting the Work to comply with the requirements of the Contract Documents. AGENCY acceptance via automated system notifications or audit logs extends only to the face value of the submitted documentation and does not constitute validation of the Contractor's submitted information.

1.04 SUBMITTALS

A. AGENCY Representative's approval is required for most submittals except submittals for information only.

1.05 COMPUTER REQUIREMENTS

A. The Contractor shall use computer hardware and software that meets the requirements of the Procore system.

B. System Requirements:

1. Operating System: Windows 7 or later and Mac X or later

2. Internet Browser: Google Chrome recommended

3. Screen Resolution: Minimum 1024 x 768 (Recommended horizontal resolution: 1280 or higher
4. Minimum Recommended Connection Speed: 30Mbps or above

5. Processor Speed: 1G and above

6. RAM: 1G and above

7. Recommendation of 32GB of free storage when using Procore app on mobile devices

1.06 CONTRACTOR RESPONSIBILITY

A. The Contractor shall be responsible for the validity of the information it places in Procore and for the abilities of their personnel. Accepted users shall be knowledgeable in the use of computers, including Internet Explorer, e-mail programs such as Outlook, word processing programs such as Word, spreadsheet programs such as Excel, and Adobe Portable Document Format (PDF) document distribution program. The Contractor shall utilize the existing forms in Procore to the maximum extent possible. If a form does not exist in Procore and the Contractor must include as an attachment or by uploading the data file, PDF documents will be created through electronic conversion rather than optically scanned.

B. The Contractor is responsible for the training of their personnel in the use of Procore as needed. All costs associated with the use of this system, will be evenly distributed in the project overheads and spread across the duration of the contract; a separate cost line item will not be allowed. Procore training is available at: https://education.procore.com/. Contractor shall provide completed training certificates for each assigned profile requested.

1.07 CONNECTIVITY PROBLEMS

A. Procore is a web-based environment and therefore subject to the inherent speed and connectivity problems of the Internet. The Contractor is responsible for its own connectivity to the Internet. Procore response time is dependent on the Contractor's equipment, including processor speed, modem speed, Internet access speed, etc. and current traffic on the Internet. The AGENCY will not be liable for any delays associated with the use of Procore including, but not limited to slow response time, down time periods, connectivity problems, or loss of information. Under no circumstances shall the use of the Procore be grounds for a time extension or cost adjustment to the contract.

PART 2 - PRODUCTS (NOT USED)

PART 3 - EXECUTION

3.01 UTILIZATION

A. SUBMITTAL: Procore shall be utilized in connection with submittal preparation and information management required by Section 01 33 00 Submittals and other Division 01 Sections. Requirements of this section are in addition to requirements of all other sections of the specifications.

B. RFI: Procore shall be utilized in connection with RFI preparation and information management required by Section 01 26 13 and other Division 1 Sections. Requirements of this section are in addition to requirements of all other sections of the specifications.

C. Meeting Agenda and Minutes: Procore shall be utilized in connection with Meeting Agenda and Minute preparation and information management required by Section 01 31 19 and other Division 1 Sections. Requirements of this section are in addition to requirements of all other sections of the specifications.

D. Photographic Documentation: Procore shall be utilized in connection with photographic documentation and information management required by Section 01 32 33 and other Division 1 Sections. Requirements of this section are in addition to requirements of all other sections of the specifications.

E. Schedules: Procore shall be utilized in connection with schedule transmittance and information management required by Section 01 32 00 and other Division 1 Sections. Requirements of this section are in addition to requirements of all other sections of the specifications.

F. Punch List: Procore shall be utilized in connection with the punchlist preparation and information management required by Section 01 77 00 and other Division 1 Sections. Requirements of this section are in addition to requirements of all other sections of the specifications.

G. Correspondence - COR-CCO, ASI, Field/Pay Estimates, General Correspondence, Statement of Working Days, Notice of Delay, Substitution Requests: Procore shall be utilized in connection with correspondence transmittance and information management required by other Division 1 Sections. Requirements of this section are in addition to requirements of all other sections of the specifications.

PART 4 – PROCEDURES

4.01 RFIs and Submittals

A. The Contractor will be responsible for submitting all RFIs and Submittals through the software and assigning them to the appropriate parties.

B. The contractor shall reference previous and related RFIs and Submittals.

C. Architects / Engineers / Consultants etc. are responsible for posting all responses to these items via the software, including all relevant attachments.

D. The Contractor will distribute responses to all affected subcontractors and confirm agreement with the response by closing the item.

4.02 Construction Documentation

A. The AGENCY will manage The Drawings, Specifications and Documents in the software to ensure that the current version of all applicable construction documentation is available to the entire team via web and mobile.

B. The Contractor will ensure that all RFIs which modify the current drawings are posted to the drawings and available via web and mobile within 24-hours of the RFI being responded to.

4.03 Contractor will review and distribute meeting minutes and action items via the software.

4.04 Contractor will take daily site photos and make them publicly available.

4.05 All punchlist items will be managed through the software.

4.06 Contractor to acknowledge correspondence items within (5) five working days.

END OF SECTION

SECTION 01 32 00
PROGRESS SCHEDULES AND REPORTS

PART 1 - GENERAL

1.01 SUMMARY

This Section Includes:

A. Administrative and Procedural Requirements for Documenting Construction Progress, including:

1. Start-Up Construction Schedule
2. Contractor's Construction Schedule
3. Project Look-Ahead Schedule
4. Construction Schedule Updating Reports
5. Daily Construction Reports
6. Material Location Reports
7. Site Condition Reports
8. Special Reports

1.02 REFERENCES

A. Abbreviations and Acronyms:

1. CPM: Critical Path Method

B. Definitions:

1. **ACTIVITY:** A discrete part of a project that can be identified for planning, scheduling, monitoring and controlling the construction project. Activities included in a construction schedule consume time and resources.

   a. Critical Activity: Activity on the critical path that must start and finish on the planned early start and finish times.
   b. Predecessor Activity: Activity that precedes another activity in the network.
   c. Successor Activity: Activity that follows another activity in the network.
   d. Cost Loading: Allocating the schedule of values for the completion of an activity as scheduled. The sum of costs for all activities must equal the total Contract Sum, unless otherwise approved by the Architect.

2. **CRITICAL PATH METHOD:** Method of planning and scheduling a construction project by arranging activities based on relationships. Network calculations (a) determine when activities can be performed and (b) identify the critical path.
3. **CRITICAL PATH:** The longest connected chain of planned activities through the network schedule that establishes the minimum overall project duration and contains no float. Any delay of an activity on the critical path directly impacts the planned project completion date
4. **EVENT:** Starting or ending point of an activity.
5. **FLOAT:** Measure of leeway in starting and completing an activity.

   a. Float time belongs to the Owner.

b. Free Float: Amount of time an activity can be delayed without adversely affecting the early start of the successor activity.
c. Total Float: The measure of leeway in starting or completing an activity without adversely affecting the planned project completion date.

6. Resource Loading: Allocation of manpower and equipment necessary for the completion of an activity as scheduled.
7. **CONTRACT TIME (or TIME OF COMPLETION):** In accordance with Ventura County Standard Specifications (VCSS) Part 1 - General Provisions, Sections 6-7, the duration for the Contractor to complete each portion of the Work as set forth in the Contract.
8. **INITIAL SCHEDULE SUBMITTAL:** The Schedule shall be submitted concurrently with the submittal of the signed Contract, Contract Bonds and Certificate of Insurance. Once received, reviewed and accepted by the AGENCY, it will become the Contract Schedule.
9. **CONTRACT SCHEDULE:** The schedule submitted by Contractor representing the sole work plan for accomplishing the Work. Once the submitted Initial Schedule Submittal is reviewed and accepted, it shall be the base line schedule document that forms the basis of all measurements of Contract Time in the Contract Documents. The Contract Schedule may not be modified other than as called for in this Document.
10. **UPDATED PROGRESS SCHEDULE:** A schedule submitted periodically reflecting current work status of all Work Activities measured against the latest accepted Contract Schedule. An updated progress schedule shall be submitted monthly, at a minimum, prior to each progress payment closure date. Processing of the progress payment will be delayed until such revised schedule complying with this section is received.
11. **CONTRACTOR'S REQUESTED REVISIONS REPORT:** A written statement of any proposed revisions to the Contract Schedule that modify the Contractor's plan of construction, activity durations, logic or other non-progress related schedule data. The report shall list all such changes to the Contract Schedule including a description of the specific change, the reason for the change and the effect the change will have on the scheduled completion date.
12. **RECOVERY SCHEDULE:** As called for by this section, a schedule produced by the Contractor once the Updated Progress Schedule forecasts that the Contractor will not finish the Work within the tolerances of the Contract Time. Once the Recovery Schedule is reviewed and accepted by the AGENCY, it will be considered the Contract Schedule.
13. **SUBMITTAL SCHEDULE:** A separate schedule or portion of the Contract Schedule maintained by the Contractor that reflects the schedule for submission and approval of Submittals for materials and equipment as required in the specifications.
14. **FLOAT:**

a. Float or Total Float shall be defined as the difference between the early finish and late finish dates for an activity.
b. Project Float shall be defined as the difference, if any, between the Contractor's planned Final Completion date and the Contract Completion date.
c. Negative Float is any such calculated float which results in a "negative" number.

15. **WORK ACTIVITY:** Any individual task of work shown on a submitted schedule that requires time and resources (manpower, equipment, materials, etc.) to be completed in a continuous operation.
16. **MILESTONE:** An element of the schedule that indicates the beginning or end of a major event or phase, or any other important point in the project.
17. **LOOK AHEAD SCHEDULE:** A schedule based on the Updated Progress Schedule that shows a limited portion of the schedule. The limited portion of the schedule shall show Work Activities that were performed at least two (2) weeks before and Work Activities planned to be performed three (3) weeks beyond the date the schedule is presented, or as reasonably requested by the AGENCY. Include submittal number corresponding with the work taking place.

18. **CHANGE ORDER FRAGNET SCHEDULE:** A schedule submitted anytime the Contractor requests an adjustment in the Contract Time. A Change Order Fragnet Schedule shall be based on the applicable portion of the Contract Schedule that is claimed to be impacted, necessitating and demonstrating an extension of the Contract Time. All modifications to the Contract Schedule's Work Activities and their associated information (including float, duration, logic, manpower, etc.) shall be clearly identified. The Change Order Fragnet Schedule submittal shall show and clearly identify the unchanged ("unimpacted") Work Activities or Milestones from the Contract Schedule that have logical ties to and from the impacted activity or chain of impacted activities. The Contract Schedule shall be left unchanged and a similar portion (i.e., the same Work Activities from the Contract Schedule) shall also be submitted for comparative purposes.
19. **CRITICAL WORK ACTIVITY:** A Work Activity that, if delayed, will delay the scheduled completion of the Work (i.e., Work Activities that comprise the path of least total float). All other Work Activities are defined as non-critical and considered to have float.
20. **BENEFICIAL OCCUPANCY:** The stage of work in the progress of the Construction Work, as determined by AGENCY's Representative, when the Construction is complete and in accordance with the Contract Documents except only for completion of minor items which do not impair AGENCY's ability to occupy and fully utilize the Construction Work for its intended purpose and a Certificate of Occupancy has been issued by the Authority Having Jurisdiction.

1.03 SUBMITTALS

A. Submittal Formats: Submit required submittals in the following format:

1. Working electronic copy of the schedule file, where indicated
2. PDF electronic file
3. Native File

B. Startup Construction Schedule

1. Approval of cost-loaded, startup construction schedule does not constitute an approval of the schedule of values for cost-loaded activities.

C. Startup Network Diagram: Submit the startup network diagram at a size required to display the entire network for the entire construction period. Show logic ties for activities.

D. Contractor's Construction Schedule: Submit the initial schedule at a size required to display the entire schedule for the entire construction period.

1. Submit a working electronic copy of the schedule, using software indicated and labeled to conform to the requirements for submittals. Include the type of the schedule (initial or updated) and date on label.

E. CPM Reports: Concurrent with CPM schedule, submit each of the following reports. The format for each activity in the reports must contain an activity number, activity description, cost and resource loading, original duration, remaining duration, early start date, early finish date, late start date, late finish date and total float in calendar days.

1. Activity Report: Submit a list of all activities sorted by activity number, then early start date, or actual start date, if known.
2. Logic Report: Submit a list of preceding and succeeding activities for all activities sorted in ascending order, by activity number, then early start date, or actual start date, if known.
3. Total Float Report: Submit a list of all activities sorted in ascending order of total float.

4. Earnings Report: Submit a compilation of the Contractor's total earnings from beginning work until the most recent Application for Payment.

F. Construction Schedule Updating Reports: Submit with Applications for Payment.

G. Daily Construction Reports: Submit at weekly intervals.

H. Material Location Reports: Submit at monthly intervals.

I. Site Condition Reports: Submit at the time of discovery of differing conditions.

J. Special Reports: Submit at the time of each unusual event.

1.04 QUALITY ASSURANCE

A. Scheduling Consultant Qualifications: Must be an experienced specialist in CPM scheduling and reporting, with the ability and capability of producing CPM reports and diagrams within 24-hours of the Architect or Owner's request.

B. Pre-scheduling Conference: Conduct a pre-scheduling conference at the project site in conformance with Section 01 31 00. Review methods and procedures related to the preliminary construction schedule and the Contractor's construction schedule, including, the following:

1. Review software limitations and report content and format.
2. Verify the availability of qualified personnel needed to develop and update the schedule.
3. Discuss constraints, including phasing, work stages, area separations, interim milestones and partial Owner occupancy.
4. Review delivery dates for Owner-furnished products.
5. Review the schedule for the work of the Owner's separate contracts.
6. Review the submittal requirements and procedures.
7. Review the time required for review of submittals and resubmittals.
8. Review the requirements for tests and inspections by independent testing and inspection agencies.
9. Review the time required for project closeout, and the Owner startup procedures, including commissioning activities.
10. Review and finalize a list of construction activities included in the schedule.
11. Review procedures for updating schedule.

1.05 COORDINATION

A. All cost for preparing, printing, mailing of any schedules called for by this section, or the Contract Documents shall be part of the Contract Sum.

B. AGENCY acceptance of the monthly Updated Progress Schedule will be a condition precedent to making monthly progress payments for Work performed.

C. All Requirements of the Contract Schedule shall also apply to the Initial Schedule Submittal, Recovery Schedule, Updated Progress Schedule, Change Order Fragnet Schedule and As-Built Schedule.

D. The Contractor shall coordinate with the AGENCY and utilize the schedule portion of the web-based construction management schedule.

E. Contractor's Construction Schedule shall coordinate with the Schedule of Values, List of Subcontracts, Submittal Schedule, Progress Reports, Payment Requests and other required Schedules and Reports.

1. Secure time commitments for performing critical elements of the work from all entities involved.
2. Coordinate each construction activity in the network with other activities and schedule them in proper sequence.

PART 2 - PRODUCTS

2.01 CONTRACTOR'S CONSTRUCTION SCHEDULE

A. Time Frame: Extend the schedule from the date established for **beginning work** to date of **final completion**.

1. The contract completion date may not be changed by submitting a schedule that shows an early completion date, unless specifically authorized by a properly executed Change Order.

B. Activities: Treat each story or separate area as a separate numbered activity for each main element of the work. Comply with the following.

1. Activity Duration: Define activities so that each activity is no longer than (20) twenty days, unless specifically authorized in writing by the Architect.
2. Procurement Activities: Include procurement process activities for long lead items and major items requiring a at least (60) sixty days as separate activities in schedule. Procurement cycle activities include submittals, approvals, purchasing, fabrication and delivery.
3. Submittal Review Time: Include review and resubmittal times indicated in Section 01 33 00 in the schedule. Coordinate submittal review times listed in the Contractor's construction schedule with the submittal schedule.
4. Startup and Testing Time: Include at least (15) fifteen business days for startup and testing.
5. Substantial Completion: Indicate completion in advance of the date established for Substantial Completion and allow time for the Architect's administrative procedures necessary for certification of Substantial Completion.
6. Punch List and Final Completion: Include at least (30) thirty calendar days for completion of punch list items and final completion.

C. Constraints: Include in schedule constraints and work restrictions indicated in the Contract Documents and the following, show how the sequence of the work is affected.

1. Phasing: Arrange a list of activities on the schedule by phase.
2. Work Under More Than One Contract: Include a separate activity for each contract.
3. Work by the Owner: Include a separate activity for each portion of the work performed by the Owner.
4. Products Ordered in Advance: Include a separate activity for each product:

   a. Include Delivery Dates indicated in Section 01 10 00.
   b. Delivery Dates indicated stipulate the Earliest Possible Delivery Date.

5. Owner-Furnished Products: Include a separate activity for each product.

   a. Include Delivery Date indicated in Section 01 10 00.

b. Delivery Dates indicated stipulate the Earliest Possible Delivery Date.

6. Work Restrictions: Show the effect of the following items on the schedule:

   a. Coordination with Existing Construction
   b. Limitations of Continued Occupancies
   c. Uninterruptible Services
   d. Partial Occupancy Before Substantial Completion
   e. Use-of-Premises Restrictions
   f. Provisions for Future Construction
   g. Seasonal Variations
   h. Environmental Control

7. Construction Areas: Identify each major area of construction for each major portion of the work. Indicate where each construction activity within a major area must be sequenced or integrated with other construction activities to provide for the following:

   a. Subgrade: Completion of Excavation and Shoring
   b. Foundation: Completion of Mat Foundation
   c. Structural Completion
   d. Completion of Elevator Installation and Permit for Elevator Use
   e. Temporary Enclosure and Space Conditioning
   f. Podium: Completion of L5 Podium Deck
   g. Permanent Space Enclosure
   h. Completion of Mechanical Installation
   i. Completion of Electrical Installation
   j. Substantial Completion

D. Milestones: Include in schedule milestones indicated on the Contract Documents, including the Notice to Proceed, Substantial Completion and final completion.

E. Cost Correlation: Superimpose a cost correlation timeline, indicating planned and actual costs. On the line, show the planned and actual dollar volume of the work performed as of the planned and actual dates used for preparation of payment requests.

F. Upcoming Work Summary: Prepare summary report indicating activities scheduled to occur or commence before the next schedule update. Summarize the following:

   1. Unresolved Issues
   2. Unanswered Requests for Interpretation
   3. Rejected or Unreturned Submittals
   4. Notations on Returned Submittals
   5. Pending Modifications affecting the Work and Contract Time

G. Recovery Schedule: When periodic updates indicate the work is (14) fourteen calendar days or more behind the current approved schedule, submit a separate recovery schedule indicating the means by which the Contractor intends to regain conformance to the schedule. Indicate changes to working hours, working days, crew sizes and equipment required to achieve conformance, and the outside date by which recovery will be accomplished.

H. Computer Scheduling Software: Prepare schedules using current version of a program developed specifically to manage construction schedules.

2.02 STARTUP CONSTRUCTION SCHEDULE

A. Bar-Chart Schedule: Submit horizontal, bar-chart-type startup construction schedule within (7) seven calendar days of the date established for beginning work.

B. Preparation: Indicate each significant construction activity separately. Identify first workday of each week with a continuous vertical line. Outline significant construction activities for the first (90) ninety calendar days of construction. Include skeleton diagram for the remainder of the work and a cash requirement prediction based on indicated activities.

2.03 CONTRACTOR'S CONSTRUCTION SCHEDULE (GANTT CHART)

A. Gantt-Chart Schedule: Submit a comprehensive, fully developed, horizontal, Gantt-chart-type, Contractor's construction schedule within (30) thirty calendar days of the date established for beginning work. Base the schedule on the submitted startup construction schedule and additional information received since the beginning of project.

B. Preparation: Indicate each significant construction activity separately. Identify the first workday of each week with a continuous vertical line.

1. For each construction activities that requires (3) three months or longer to complete, indicate an estimated completion percentage in 10% increments within a time bar.

2.04 REPORTS

A. Daily Construction Reports: Prepare a daily construction report concerning events at the project site and recording at least the following:

1. List of subcontractors at the project site
2. List of separate contractors at the project site
3. Approximate count of personnel at the project site
4. Equipment at the project site
5. Material deliveries
6. High and low temperatures and general weather conditions, including the presence of rain or snow
7. Accidents
8. Meetings and significant decisions
9. Unusual events (see special reports)
10. Stoppages, delays, shortages, and losses
11. Meter readings and similar recordings
12. Emergency procedures
13. AHJ orders and requests
14. Change Orders received and implemented
15. Construction Change Directives received and implemented
16. Services that are connected and disconnected
17. Equipment or system tests and startups
18. Partial completions and occupancies
19. Substantial Completions authorization

B. Site Condition Reports: Upon discovery of a difference between site conditions and the Contract Documents, promptly prepare and submit a detailed report along with a Request for Information. Include a detailed description of the differing conditions, together with recommendations for modifying the Contract Documents.

PART 3 - EXECUTION

3.01 CONTRACTOR'S CONSTRUCTION SCHEDULE

A. Updating the Contractor's Construction Schedule: Update the contractor's construction schedule at least monthly to reflect actual construction progress and activities. Issue updated schedules at least (5) five business days before each regularly scheduled progress meeting.

1. Promptly revise the schedule after each meeting or other activity where revisions are recognized or made. Issue an updated schedule concurrently with the report of each meeting.
2. Include a report with an updated schedule that indicates every change, including changes in logic, durations, actual starts and finishes and activity durations.
3. As the work progresses, indicate the final completion percentage for each activity.

B. Distribution: Distribute copies of the Contractor's Construction Schedule to the Architect the Owner, separate contractors, testing and inspecting agencies, and other parties identified by the Contractor with a need-to-know schedule responsibility.

1. Post copies of the schedule in all project meeting rooms and all temporary field offices.
2. When revisions are made, distribute updated schedules to the same parties and re-post copies in the same locations. Delete parties from distribution when their assigned portion of the work in complete and they are no longer involved in performance of construction activities.

3.02 SUBMITTALS

A. INITIAL SCHEDULE SUBMITTAL: Per VCSS 6-1, The Contractor shall submit the Initial Schedule Submittal concurrently with the submittal of signed Contract, Contract Bonds and Certificate of Insurance. The Notice to Proceed will be delayed until the schedule is received and approved by AGENCY. See VCSS 6-7.4, Starting of Contract Time.

B. FORM: Schedule submittals shall be provided as described below:

1. The Contractor shall submit an electronic copy of the Schedule. The electronic copy of the schedule will be provided in the scheduling software's native file format so that it may be restored, opened and analyzed by the AGENCY, as well as a PDF electronic printout. The PDF printout shall indicate the Activity Number, Activity Description, Total Float, Percent Complete, Early Start date and Early Finish date, as well as display the bars representing activity durations.
2. The Contractor shall submit a PDF electronic printout of the schedule's critical path. The PDF printout shall indicate the Activity Number, Activity Description, Total Float, Percent Complete, Early Start date and Early Finish date, as well as display the bars representing activity durations.
3. The contractor shall submit the following Schedule reports on 8-1/2" x 11" media or as requested by the AGENCY:

a. Monthly Progress Report: The Monthly Progress Report shall be organized as follows:

(i) Contractor Transmittal Letter
(ii) A Description of Work Completed During the Period

(iii) Identification of unusual resources: Manpower, Material or Equipment Restrictions or use, including multiple shifts, 6-day work weeks, specified overtime or work at times other than regular days or hours
(iv) Description of the Current Critical Path
(v) Changes to the Critical Path since the last schedule submittal
(vi) Description of Problem Areas
(vii) Current and Anticipated Delays, including:

1. Cause of delay
2. Impact on other activities milestone and completion dates
3. Corrective action and schedule adjustments to correct the delay

(viii) Pending Items and Status of:

1. Permits
2. Change Orders
3. Time Adjustments
4. Non-Compliance Notices

(ix) Contract Completion Date Status:

1. Ahead of schedule and number of days
2. Bend schedule and number of days
3. Causes for any changes

b. Activity Report: The Activity Report shall include all of the activities sorted by activity number and present the following information: Activity Number, Activity Description, Original Duration, Remaining Duration, Percentage Complete, Responsibility Code, Area Code, Early/Actual Start, Early/Actual Finish, Late Start, Late Finish, Total Float (except as specifically indicated otherwise).

c. Early Start Report: The Early Start Report shall be per the above Activity Report requirements with the exception that is shall be sorted by early start. (Note: This report shall be required with the Initial and Updated Progress Schedule submittals).

3.03 WEEKLY PROGRESS MEETING

A. Once each week, on a day established by the AGENCY, a meeting will be held to assess the progress achieved by the Contractor during the previous work week. The Contractor shall submit the Look Ahead Schedule (if requested) and a manpower/construction report for the previous week (the Weekly Report). The Weekly Report shall indicate for each day of the preceding week the actual manpower for each activity which was in progress. This report shall include the actual number of tradesmen which were working for the Contractor and each subcontractor each day. The Weekly Report shall also indicate for each day the weather conditions, potential delays and inspections occurring on that day. The Weekly Report shall be a report derived from the Schedule which may be completed by hand providing that the handwriting is legible to the AGENCY.

B. See also Section 01 31 19 Project Meetings.

3.04 PROGRESS REPORTING AND SCHEDULE REVISIONS

A. Once each month on the date specified by the AGENCY, the Contractor shall prepare and submit to the AGENCY an Updated Progress Schedule and reports stipulated within this Section. The Updated Progress Schedule shall:

1. Have a data date and be statused as of the first calendar day of the month, or other date as established by the AGENCY.
2. Show all progress, including but not limited to as-built dates, percent complete and resources expended.
3. Show accepted changes, including but not limited to changes as the result of change orders and any changes in contract completion dates which have been accepted within this section since the last revision of the Schedule.
4. Only include changes to the schedule that follow the procedure outlined in paragraph B below.

B. Should the Contractor after AGENCY's acceptance of the Initial Schedule Submittal desire to change Contractor's plan of construction, activity durations, logic or other non-progress related schedule data, Contractor shall submit a Contractor's Requested Revisions Report, as defined in Part 1 of this Section, to the AGENCY at least (1) one week prior to the submittal of a schedule incorporating any such changes. Attached to the Report shall be a schedule analysis report (generated from the software indicated in Part 2) comparing the previously accepted schedule to the proposed schedule. At a minimum, this schedule analysis report shall show the added activities, deleted activities, added relationships, deleted relationships, changed original durations, changed remaining durations and changed driving relationships. Requested changes that are acceptable to the AGENCY will be incorporated into the next Updated Progress Schedule.

C. The Contractor shall revise the Schedule as reasonable to mitigate the impact of changes and delays to the project with no change in Contract price. However, when the AGENCY orders changes which have the potential to impact the specific dates stipulated, a Change Order Fragnet will be prepared by the Contractor and provided with the Contractor's proposed price or extra work tabulation as required to the AGENCY for concurrence or revision as AGENCY deems necessary. After the Change Order Fragnet has been accepted by the AGENCY, it will be incorporated into the next Updated Progress Schedule submitted by the Contractor. Change Order logic will affect only those activities and performance dates directly concerned. Adjustments in scheduled intermediate completion dates or for the Contract as a whole will be considered only to the extent that there is insufficient remaining float to absorb these changes.

D. Neither the updating or revision of the Contractor's Schedule, nor the submission, updating, change or revision of any report or Schedule submitted to AGENCY by Contractor under this Section, nor AGENCY's review of any report or Schedule, or the nonexistence of any such report or Schedule shall have the effect of amending or modifying in any way the Contract Time, or the Contact Completion Date, nor shall it modify or limit in any way Contractor's obligations under this Contract.

3.05 REVIEW AND ACCEPTANCE

A. The AGENCY will review the Contractor's schedule submittals for constructability, cost allocation, and adherence to plans and specifications. The Contractor shall revise the Schedule as required by the AGENCY and shall submit revised Schedule to the AGENCY within (7) seven calendar days. Within (10) ten calendar days following submission of an acceptable schedule, the Contractor will provide electronic and/or hardcopy versions of the Contractor's Schedule Submittal as outlined above. Acceptance by the AGENCY of the Contractor's

Schedule is advisory only and shall not relieve the Contractor of the responsibility for accomplishing the work in accordance with the Contract. Omissions and errors in the accepted Schedule shall not excuse performance which is not in compliance with the Contract. Acceptance by the AGENCY in no way makes the AGENCY an insurer of the Schedule's success or liable for time or cost overruns flowing from its shortcomings. The AGENCY hereby disclaims any obligation or liability by reason of AGENCY's acceptance of or acquiescence to the Schedule.

B. If the AGENCY finds the Contractor falling behind the progress schedule, the Contractor shall take any and all steps necessary to improve Contractor's progress at no additional cost to the AGENCY, including cost impacts to other contractors, utilities or agencies directly caused by Contractor's delay. Such steps include, but are not limited to the following:

1. Increase construction manpower in such quantities and crafts as will substantially eliminate the lag in schedule progress.
2. Increase the number of working hours per shift, shifts per working day, working days per week (as allowed by the AGENCY), or the amount of construction equipment, or any combination of the foregoing, sufficiently to substantially eliminate lag in scheduled progress.

3.06 RECOVERY SCHEDULE

A. If requested by the AGENCY, the Contractor shall prepare and submit within (14) fourteen days from notification from the AGENCY a Recovery Schedule in accordance with the definition included in Part 1 of this Section. The Recovery Schedule shall address a new work plan to accomplish the remaining Work within the Contract Time and shall include and identify additional concurrent operations, logic and sequence changes, additional manpower, additional shifts, or overtime work. Once reviewed and accepted by the AGENCY, the Recovery Schedule shall be used as the Contractor’s Updated Progress Schedule.

3.07 CHANGE ORDER FRAGNET SCHEDULE

A. In accordance with the definition included within Part 1 of this Section, a Change Order Fragnet Schedule shall be submitted any time the Contractor requests an extension of the Contract Time or an extension to other Contract requirements. A condition precedent to obtaining a time extension under the Contract shall be the timely submission of a Change Order Fragnet schedule pursuant to the requirements of this paragraph.

B. A Change Order Fragnet shall be submitted within (15) fifteen days after a delay occurs or with the Contractor’s cost proposal in response to a notice of change from the AGENCY. In cases where the Contractor does not submit a Change Order Fragnet for a specific change order, delay, or other Contractor requested time extension within the specified period of time, then it is mutually agreed that the particular change order, delay or Contractor request has no time impact on the Contract completion date and no time extension is required.

C. Actual delays in activities which do not affect the critical path Work, or which do not move the Contractor’s planned completion date beyond the Contract completion date, will not be the basis for an adjustment of the Contract Time.

D. All other requirements of the Contract Schedule shall apply to a Change Order Fragnet Schedule.

E. Approval or rejection of the Change Order Fragnet will be made within (15) fifteen days after receipt of the Change Order Fragnet unless additional information, subsequent meetings and negotiations are necessary. Upon mutual agreement of both parties, schedule revisions illustrating the influence of the change orders, delays and/or Contractor requests will be incorporated into the next Updated Progress Schedule.

3.08 LOOK AHEAD SCHEDULES

A. In accordance with the definition included within Part 1 of this Document, a Look-Ahead Schedule shall be submitted at each progress meeting of the Work or as reasonably requested by the AGENCY and show a minimum 3-week look ahead.

B. The schedule shall display the activity ID, activity description, planned start/finish dates, total float and the percentage complete.

3.09 SUBMITTAL SCHEDULE

A. In accordance with the definition included within Part 1 of this Document and Section 01 33 01 (SUBMITTALS), the Submittal Schedule shall be submitted and maintained by the Contractor. The Submittal Schedule shall be a comprehensive and complete representation of task activities and dates related to the procurement of materials, equipment or other items requiring AGENCY or designer approval (e.g., shop drawings, product data, etc.). Provide all such dates and activity durations for submittal review and approval activities in accordance with the specification sections regarding submittals. Resubmittals shall have the same review time as the Contractor's initial submittals. For additional information on requirements for Submittals, see Section 01 33 01.

B. Include any required or necessary items furnished by the AGENCY or a third party.

C. Consider the nature and complexity of each submittal item and allow ample time for review, revision, correction, resubmittal and approval sufficiently in advance of the construction requirements. Coordinate preparation and processing of submittals with performance of the Work so that work will not be delayed by submittal processing. Coordinate and sequence different categories of submittals for same work, and for interfacing units of work, so that one will not be delayed by lack of coordination with another.

D. Make the Submittal Schedule consistent with the Contract Schedule required under this Section.

E. Consider time required for preparation and review of mockups and the relationship between mockups and the Work.

F. Schedule submittals in sequence with the schedule for Work except as required for products known to require long lead-times. For submittal of items requiring long lead-times, submit written verification of the required lead-time from the supplier, if requested.

G. Identify on the schedule all items required by the Contract Documents indicating:

1. The Submittal Number and Submittal Sequence Number
2. The Specification Section Number
3. The Submittal Description and Manufacturer
4. The Submittal Designation Character
5. Whether the Submittal is required for Review or for the Record

6. Schedule Date for First Submittal
7. Schedule Date for Resubmittal
8. Schedule Date when AGENCY or Designer's final release or approval is required to be returned to the Contractor
9. Scheduled Date by which the material or equipment must be on the site so as not to delay the progress of the work

H. To the greatest extent possible, make single submissions covering the entire work of individual technical Specification Sections. Partial or "phased" submittals for work of the same Section will not be reviewed.

I. Receipt of the Submittal Schedule by AGENCY will be a precondition of the receipt of the first progress payment. AGENCY and Designer will review the Submittal Schedule in accordance with the procedures for the Updated Progress Schedule included in this Section.

J. Submittal Schedule shall be updated and presented at progress meetings, or as requested by AGENCY.

END OF SECTION

SECTION 01 32 33
PHOTOGRAPHIC DOCUMENTATION

PART 1 - GENERAL

1.01 SUMMARY

This Section Includes:

A. Administrative and Procedural Requirements for:

1. Pre-Construction Photographs
2. Periodic Construction Photographs
3. Final Completion Construction Photographs
4. Web-Based Construction Photographic Documentation

1.02 SUBMITTALS

A. Digital Photographs: Submit image files within (3) three business days of taking photographs.

1. Digital Camera: Minimum sensor resolution of 8 Megapixels
2. Format: Minimum 3200 x 2400 pixels, in unaltered original files, with same aspect ratio as the sensor, uncropped, date and time stamped, in folder named by date of photograph, accompanied by key plan file.
3. Identification: Provide the following information with each image description in file metadata tag:

a. Name of the project
b. Name and contact information for photographer
c. Name of the Architect
d. Name of the Contractor
e. Date photograph was taken
f. Description of vantage point, indicating location, direction (by compass point), and elevation or story of construction
g. Unique sequential identifier keyed to accompanying key plan

1.03 QUALITY ASSURANCE

A. Photographer Qualifications: An individual who has been regularly engaged in construction projects for at least (5) five years.

B. Web-Based Photographic Documentation Service Provider: A firm specializing in providing photographic equipment, web-based software and related services for construction projects. Firm to have a record of providing satisfactory services similar to those required for the project.

1.04 USAGE RIGHTS

A. Obtain and transfer copyright usage rights from photographer to the AGENCY for unlimited reproduction of photographic documentation.

PART 2 - PRODUCTS

2.01 PHOTOGRAPHIC MEDIA

A. Digital Images: Provide images in JPG format, produced by a digital camera with minimum sensor size of 8 Megapixels, and at an image resolution of at least 3200 x 2400 pixels.

B. Digital Video Recordings: Provide high-resolution, digital video disc in format acceptable to the AGENCY.

PART 3 - EXECUTION

3.01 CONSTRUCTION PHOTOGRAPHS

A. Photographer: Engage a qualified photographer to take construction photographs.

B. General: Take photographs using the maximum range of depth of field, and that are in focus, to clearly show the work. Photographs with blurry or out-of-focus areas will not be accepted.

1. Maintain key plan with each set of construction photographs that identifies each photographic location.

C. Digital Images: Submit digital images exactly as originally recorded in the digital camera, without alteration, manipulation, editing, or modifications using image-editing software.

1. Date and Time: Include date and time in file name for each image.
2. Field Office Images: Maintain (1) one set of images accessible in the field office at the project site, available at any time for reference. Identify images in the same manner as those submitted to the Architect.
3. Provide photographs via a web link or on an external storage device.

D. Pre-Construction Photographs: Before commencement of WORK, take photographs of the project site and surrounding properties, including existing items to remain during construction, from different vantage points, as directed by the AGENCY.

1. Flag excavation areas before taking construction photographs.
2. Take as many photographs and/or videos as necessary to show existing conditions adjacent to property before starting the work.
3. Take as many photographs and/or videos as necessary of existing buildings either on or adjoining property to accurately record physical conditions at start of construction.
4. Take additional photographs as required to record settlement or cracking of adjacent structures, pavements, and improvements.

E. Periodic Construction Photographs: Every month, take (20) twenty color photographs that coincide with the monthly Payment Application cut-off date. Select vantage points to show status of construction and progress since last photographs were taken.

F. Final Completion Construction Photographs: After the Substantial Completion date, take (20) twenty color photographs for submittal as project record documents. The Architect will inform photographer of desired vantage points.

1. Do not include date stamp.

3.02 WEB-BASED CONSTRUCTION PHOTOGRAPHIC DOCUMENTATION [Per PM discretion]

A. Time-Lapse Sequence Construction Site Recordings: Provide video recording from a fixed-location camera to show status of construction and progress.

1. Frequency: Record one frame of video recording every (60) sixty minutes, from same vantage point each time, to create a time-lapse sequence of construction activities.
2. Timer: Provide timer to automatically start and stop video recorder, so recording occurs only during daylight construction work hours.

B. Maintain cameras and web-based access in good working order, according to web-based construction photographic documentation service provider's written instructions until final completion. Provide for service of cameras and related networking devices and software.

END OF SECTION

SECTION 01 33 00
SUBMITTAL PROCEDURES

PART 1 - GENERAL

1.01 SUMMARY

A. Section Includes:

1. Requirements for initial construction submittals, including a proposed products list, a proposed substitutions list, a proposed subcontractor's list and a submittal schedule.
2. Administrative and procedural requirements for submitting shop drawings, product, samples and other specified submittals.

B. Related Requirements:

1. Ventura County Standard Specifications 2-5
2. Section 01 13 13 for Submittals related to Delegated Design Portions of the Work.
3. Section 01 29 00 for Submitting Applications for Payment.
4. Section 01 29 73 for Submitting the Schedule of Values.
5. Section 01 31 33 for Submitting Coordination Drawings.
6. Section 01 32 00 for Submitting Schedules and Reports, including the Contractor's Construction Schedule.
7. Section 01 43 00 for Submitting Test and Inspection Reports.
8. Section 01 78 36 for Submitting Warranties.
9. Section 01 78 23 for Submitting Operation and Maintenance Manuals.
10. Section 01 78 39 for Submitting Project Record Documents, including Record Drawings, Record Specifications and Record Product Data.
11. Section 01 79 00 for Submitting Video Recordings of Demonstration of Equipment and Training of the Owner's Personnel.

1.02 DEFINITIONS

A. Action Submittal: Information or physical samples required by the specifications, which receive a responsive action from the Architect. Action submittals are those submittals indicated in individual Specification Sections as "action submittals."

B. Informational Submittal: Information required by the specifications that does not require responsive action from the Architect. Submittals may be rejected for not complying with requirements. Informational submittals are those submittals indicated in individual Specification Sections as "informational submittals."

1. Information submittals must be printed on green-colored paper.
2. If submitted digitally, each page must be clearly marked as an informational submittal.

C. Partial or Incomplete Submittal: A Submittal that does not contain complete information about all specified requirements.

D. Combined Submittal: Submittal for which information for each specific item or class of material or equipment required by multiple specification sections is organized into a single submittal package.

E. Early Submittal: Submittal for products or assemblies that do not affecting the critical path, and do not correspond to the chronological sequence of construction.

F. Out of Sequence Submittal: A Submittal that is (a) submitted outside of the particular order indicated on the submittal and construction schedules in which project milestones, events, movements, or other activities follow each other or (b) submitted before its predecessor submittals are submitted.

G. Samples for Initial Selection: Complete collection showing the manufacturer's full range of colors, textures, and patterns available for selection. The Architect returns the submittal with options selected.

H. Samples for Verification: Full-size production units prepared from the same material and finish as what is specified for the work.

1.03 INITIAL CONSTRUCTION SUBMITTALS

A. Proposed Products List: Within (15) fifteen business days of the Notice to Proceed, submit a complete list of major products proposed for inclusion on the project, with the manufacturer's name, trade name, and model number of each product. For products specified only by reference standards, furnish the manufacturer's trade name, model or catalog designation and reference standards.

B. Proposed Substitutions List: Within (30) thirty calendar days of the Notice to Proceed, prepare and submit a written summary using form acceptable to the Architect identifying proposed substitute materials and equipment.

A. Submittals Schedule: Submit a schedule of submittals, arranged in chronological order by dates required by construction schedule. Include time required for review, ordering, manufacturing, fabrication and delivery when establishing dates. Include additional time required for making corrections or revisions to submittals noted by the Architect and additional time for handling and reviewing submittals required by those corrections.

1. Coordinate submittal schedule with list of subcontracts, the schedule of values and Contractor's construction schedule.
2. Initial Submittal: Transmit concurrently with the startup construction schedule. Include submittals required during the first (60) sixty days of construction. List those submittals required to maintain orderly progress of the Work and those required early because of long lead time for manufacture or fabrication.
3. Final Submittal: Transmit concurrently with the first complete submittal of the Contractor's construction schedule.

   a. Transmit revisions to reflect changes in current status and timing for submittals.

4. Format: Arrange the following information in tabular format:

   a. Scheduled Date for First Submittal
   b. Specification Section Numbers and Titles
   c. Submittal Category (e.g., Action, Informational, etc.)
   d. Name of Subcontractor
   e. Description of the Work Covered
   f. Scheduled Date for the Architect's Final Release or Approval
   g. Scheduled Date of Fabrication

1.04 ADMINISTRATIVE REQUIREMENTS

A. Coordination: Coordinate preparation and processing of submittals with performance of construction activities.

1. Coordinate each submittal with fabrication, purchasing, testing, delivery, other submittals and related activities that require sequential action.
2. Transmit all submittal items required for each Specification Section concurrently unless partial submittals for portions of the Work are indicated on the approved submittal schedule.
3. Transmit action submittals and informational submittals required by the same Specification Section as separate packages under separate transmittals.
4. Coordinate the transmittal of different types of submittals for related parts of the Work so processing is not delayed because of a need to review submittals concurrently for coordination.

a. The Architect may withhold action on submittals requiring coordination with other submittals until related submittals are received.

B. Transmit submittals within a reasonable time frame so as not to interfere with or impede the progress of the work.

1. Each submittal must be transmitted with such promptness as to not cause any delay in the Contractor's own work, or the work of any subcontractor.
2. Adjustments to the Contract Time or Contract Sum resulting from the Contractor’s failure to transmit a submittal with sufficient time to allow for the orderly processing and review by the Architect are prohibited.

C. Review and response time for each submittal begins when:

1. The Architect receives the complete submittal from the Contractor (not when the submittal is transmitted by the Contractor)
2. The Architect receives all requested additional information from the Contractor for those submittals requiring additional information or clarification from the Contractor

D. Review and response time for each submittal is increased when:

1. Additional information from the Contractor is requested by the Architect
2. The submittal is transmitted out of sequence
3. The Architect deems more time is needed to review the submittal

a. The Contractor shall alert the Architect in writing of the time available before a review may cause an impact to the Contract Sum or Contract Time.
b. The Contractor’s failure of to alert the Architect in writing inures to the benefit of the Architect.

E. Electronic Submittals: Identify and incorporate information in each electronic submittal file as follows.

1. Assemble the complete submittal package into a single indexed file incorporating the submittal requirements of a single specification Section, and a transmittal form with links enabling navigation to each item.
2. Provide a means for insertion to permanently record the Contractor's review and approval markings and the action taken by the Architect.

3. Transmittal Form for Electronic Submittals: Use electronic form acceptable to AGENCY, containing the following information:

    a. Project Name
    b. Date
    c. Name and Address of Architect
    d. Name of Construction Manager
    e. Name of Contractor
    f. Name of Firm or Entity that Prepared Submittal
    g. Names of Subcontractor, Manufacturer and Supplier
    h. Category and Type of Submittal
    i. Submittal Purpose and Description
    j. Specification Section Number and Title
    k. Specification Paragraph Number or Drawing Designation and generic name for each of multiple items
    l. Drawing Number and Detail References, as appropriate
    m. Location(s) where Product is to be Installed, as appropriate
    n. Related Physical Samples Submitted Directly
    o. Indication of Full or Partial Submittal
    p. Transmittal Number, numbered consecutively
    q. Submittal and Transmittal Distribution Record
    r. Other Necessary Identification
    s. Remarks

4. Metadata: Include the following information as keywords in the electronic submittal file metadata:

    a. Project Name
    b. Number and Title of appropriate Specification Section
    c. Manufacturer Name
    d. Product Name

F. Options: Identify options requiring selection by Architect.

G. Deviations and Additional Information: On an attached separate sheet, prepared on the Contractor's letterhead, record relevant information, requests for data, revisions other than those requested by the Architect on previous submittals and deviations from requirements in the Contract Documents, including minor variations and limitations. Include the same identification information as required for the related submittal.

H. Resubmittals: Make resubmittals in same form and number of copies as the initial submittal. Resubmittals shall contain all the originally approved items with the revised items for a complete package.

    1. Note the date and content of the previous submittal.
    2. Note the date and content of the revision in the label or title block and clearly indicate the extent of the revision.
    3. Retransmit submittals until they are marked with approval notation from Architect's action stamp.

I. Distribution: Furnish copies of final submittals to the manufacturers, subcontractors, suppliers, fabricators, installers, AHJ, and others as necessary for performance of the Work. Include a distribution on each transmittal form.

J. Use for Construction: Retain one complete copy of each submittal, including all resubmittal(s), at the project site.

1. Use only final action submittals that are marked with approval notation from Architect's action stamp.
2. Do not perform any portion of the work requiring submittal and review until the Architect has reviewed and returned the respective submittal. Perform such work in compliance with returned submittals.

1.05 PROCEDURAL REQUIREMENTS

A. General Submittal Procedure Requirements:

1. Prepare and transmit only complete submittals that are required by each individual specification Section.

a. Submittals not required by the specifications are returned to the Contractor without review, except to record nonconformance with these requirements.
b. Partial or incomplete submittals are returned to the Contractor without review, except to record nonconformance with these requirements.
c. Multiple submittals are returned to the Contractor without review, except to record nonconformance with these requirements.

2. Submittals not conforming to the specified procedural requirements are returned to the Contractor without review, except to record nonconformance with these requirements.

B. Electronic Submittals:
a. See section 01 31 23 for submitting e-file submittals.

1.06 ACTION SUBMITTALS

A. Product Data: Collect information into a single submittal for each element of construction and type of product or equipment.

1. If information must be specially prepared for a submittal because standard published data are not suitable for use, transmit as Shop Drawings, not as Product Data.
2. Mark each copy of every submittal to show which products and options are applicable.
3. Include the following information, as applicable:

a. Manufacturer's Catalog Cutsheets
b. Manufacturer's Product Specifications
c. Standard Color Charts
d. Statement of Compliance with specified Referenced Standards
e. Testing by recognized Testing Agency
f. Application of Testing Agency Labels and Seals
g. Notation of Coordination Requirements
h. Availability and Delivery Time Information

4. For equipment, include the following in addition to the above, as applicable:

a. Wiring Diagrams showing Factory-Installed Wiring
b. Printed Performance Curves
c. Operational Range Diagrams

d. Clearances required to other construction, if not indicated on accompanying Shop Drawings.

5. Transmit Product Data before or concurrent with Samples through Wed-Based Project Management program.
6. Transmit Product Data as an electronic PDF through Web-Based Project Management program.

B. Shop Drawings: Prepare project-specific information, drawn accurately to scale. Do not base Shop Drawings on reproductions of the Contract Documents or standard printed data.

1. Preparation: Fully illustrate requirements in the Contract Documents. Include the following information, as applicable:

a. Identification of Products
b. Schedules
c. Compliance with Specified Standards
d. Notation of Coordination Requirements
e. Notation of Dimensions established by Field Measurement
f. Relationship and attachment to adjoining construction clearly indicated
g. Seal and Signature of Professional Engineer, if specified

2. Sheet Size: Except for templates, patterns, and similar full-size drawings, transmit Shop Drawings on sheets at least 8-1/2-inches by 11-inches, but not larger than 30-inches by 42-inches.
3. Transmit Shop Drawings in PDF electronic file.

C. Samples: Transmit Samples for reviewing the kind, color, pattern, and texture for comparison to other submittals and actual components, as delivered and installed.

1. Transmit Samples that contain multiple, related components such as accessories together in (1) one submittal package.
2. Identification: Attach a label on an unexposed side of each Sample that includes the following.

a. Generic description of the sample
b. Product name and manufacturer’s name
c. Sample source
d. Number and title of applicable specification Section
e. Specification paragraph number and generic name of each item

3. All projects require electronic submittals, provide corresponding electronic submittal of the Sample transmittal, a digital image file illustrating the Sample’s characteristics and identification information for record.
4. Disposition: Maintain sets of approved Samples at project site, available for quality-control comparisons throughout the course of the project. Sample sets may be used to determine final acceptance of construction associated with each set.

a. Samples that may be incorporated into the work are indicated in individual specification Sections. Such Samples must be in an undamaged condition at the time of use.
b. Samples not incorporated into the work, or otherwise designated as the AGENCY's property, are the property of Contractor.

5. Samples: Transmit full-size units or Samples of the specified size, prepared from the same material used for the Work, cured and finished in the manner specified and physically identical to the material or product proposed for use and that shows the full range of color and texture variations expected. Samples are to include the following: partial sections of manufactured or fabricated components, small cuts or containers of materials, complete units of repetitively used materials, swatches showing color, texture, and pattern, color range sets and components used for independent testing and inspection.

    a. Number of Samples: Transmit (3) three sets of Samples. The AGENCY retains (2) two Sample sets and the remainder are returned. Mark-up and retain (1) one returned Sample set as a project record sample.

        1) Transmit a single Sample where assembly details, workmanship, fabrication techniques, connections, operation and other similar characteristics are demonstrated.
        2) If variation in color, pattern, texture, or other characteristic is inherent in material or product represented by a Sample, transmit at least (3) three sets of paired units that show approximate limits of variations.

1.07 INFORMATIONAL SUBMITTALS

A. Product Schedule:

1. As required in individual Specification Sections, prepare a written summary indicating the types of products required for the work along with their intended location. Include the following information in tabular form:

    a. Type of product. Include unique identifier for each product indicated in the Contract Documents or assigned by Contractor if none is indicated.
    b. Manufacturer and product name and model number, if applicable.
    c. Number and name of room or space.
    d. Location within room or space.

2. Transmit product schedule in PDF electronic file.

B. Application for Payment and Schedule of Values: As specified in Section 01 29 00.

C. Contractor's Construction Schedule: As specified in Section 01 32 00.

D. Coordination Drawing Submittals: As specified in Section 01 32 33.

E. Closeout Submittals and Maintenance Material Submittals: As specified in Section 01 77 00.

F. Maintenance Data: As specified in Section 01 78 23.

G. LEED Submittals: To be provided as an addendum.

H. Qualification Data: Prepare written information that demonstrates the capabilities and experience of the company and the ability of the person. Include lists of completed projects with project names and addresses, contact information of architects and owners and other information specified.

I. Welding Certificates: Prepare written certification that welding procedures and personnel conform to the requirements in the Contract Documents. Transmit a record of Welding Procedure Specification and Procedure Qualification Record on AWS forms. Include the names of firms and personnel certified.

J. Installer Certificates: Submit written statements on manufacturers' letterhead certifying that the installer complies with requirements in the Contract Documents and, where required, is authorized by the manufacturer for this specific project.

K. Manufacturer Certificates: Submit written statements, prepared on the manufacturer's letterhead, certifying that the manufacturer’s qualification and other characteristics conform to the requirements of the Contract Documents. Include evidence of manufacturing experience, when requested.

L. Product Certificates: Submit written statements, prepared on the manufacturer's letterhead, certifying that the product complies with requirements in the Contract Documents.

M. Material Certificates: Submit written statements, prepared on the manufacturer's letterhead, certifying that the material complies with requirements in the Contract Documents.

N. Material Test Reports: Submit reports prepared by a qualified testing and inspection agency, on the testing agency's standard form, indicating and interpreting the results of tested or inspected material for conformance with the requirements in the Contract Documents.

O. Research Reports: Submit reports issued by a model code organization acceptable to the AHJ, that the products conform to the building code in effect for project. Include the following information:

1. Name of evaluation organization
2. Date of evaluation
3. Time period when report is in effect
4. Product and manufacturers' names
5. Description of product
6. Test procedures and results
7. Limitations of use

P. Preconstruction Test Reports: Submit reports prepared by a qualified testing and inspection agency, on the testing agency's standard form, indicating and interpreting the results of tests or inspections performed before installation to confirm conformance to the Contract Documents.

Q. Compatibility Test Reports: Submit reports prepared by a qualified testing and inspection agency, on the testing agency's standard form, indicating and interpreting the results of compatibility tests performed before installation of a particular product. Include written recommendations for primers and substrate preparation necessary to promote proper adhesion.

R. Field Test Reports: Submit reports prepared by a qualified testing and inspection agency, on the testing agency's standard form, indicating and interpreting the results of field tests for conformance with the requirements in the Contract Documents performed either during the installation of a product or after the product is installed in its final location.

PART 2 - PRODUCTS (NOT USED)

PART 3 - EXECUTION

3.01 CONTRACTOR'S SUBMITTAL REVIEW

A. Review each submittal and check for coordination with other work of the Contract and for compliance with the Contract Documents.

1. Note corrections and field dimensions.
2. Mark with review stamp before submitting to the AGENCY.

B. Project Closeout and Maintenance Material Submittals: See requirements in Section 01 77 00 "Closeout Procedures."

C. Review stamp:

1. Provide a uniform review stamp containing, at a minimum, the following information:

a. Name of Company
b. Status of Review
c. Date
d. Initials of Reviewer

2. Stamp and initial submittals as follows:

a. Stamp and initial the first page of every product data submittal.
b. Stamp and initial every sheet of each shop drawing submittal.
c. Stamp and initial the back of every sample submitted for review.

3. By stamping and submitting each submittal, the Contractor represents that the Contractor has determined and verified the following:

a. Compliance with the Requirements of the Contract Documents
b. Field Measurements
c. Quantities
d. Dimensions
e. Specified Performance Criteria
f. Installation Requirements
g. Catalog Number and Similar Information
h. Materials with respect to intended use, fabrication, shipping, handling, storage, assembly and installation pertaining to performance of the work
i. Coordination of the requirements of the item submitted with the overall the project
J. Additional information relative to the Contractor's sole responsibility for means, methods, techniques, sequences and procedures of construction and safety precautions and programs incident thereto

D. Submittals that do not correctly bear the Contractor's approval stamp will be returned to the Contractor without review.

3.02 AGENCY'S ACTION

A. Action Submittals: The AGENCY will review each submittal for conformance with the information given and the design concept expressed in the Contract Documents, will make marks to indicate corrections or modifications required and will return each submittal to the Contractor for distribution.

B. The AGENCY marks each submittal with an action notation and marks appropriately to indicate the action taken as follows:

1. “NO EXCEPTIONS”: Fabrication, manufacture and/or construction may proceed. The work generally is in compliance with the Contract Documents.
2. “MAKE CORRECTIONS NOTED”: Fabrication, manufacture and/or construction may proceed providing the work is in compliance with the AGENCY’s and Designer of Record notations and the Contract Documents.
3. “REVISE AND RESUBMIT”: No work may be fabricated, manufactured and/or constructed. Additional submittal required. This submittal is not permitted on the site.
4. “REJECTED”: No work may be fabricated, manufactured and/or constructed. New submittal required. This submittal is not permitted on the site.

C. Review of separate item does not constitute review of an assembly in which item functions.

D. Informational Submittals: The AGENCY will review each submittal and will not return it or will return it if it does not comply with requirements. The AGENCY will forward each submittal to appropriate party.

E. Partial submittals prepared for a portion of the Work will be reviewed when use of partial submittals has received prior approval from the AGENCY.

F. Incomplete submittals are unacceptable, will be considered nonresponsive, and will be returned for resubmittal without review.

G. Submittals not required by the Contract Documents may be returned by the AGENCY without action.

H. Submittals containing substitutions for specified materials, products, equipment, manufacturers, model numbers, components, assemblies, color, texture, finish, pattern, characteristics, elements or other properties are rejected.

3.03 RESUBMITTAL REQUIREMENTS

A. Revise initial shop drawings, when required and retransmit as specified for initial submittal. Indicate on drawings changes made, other than those requested by the AGENCY, clearly by clouding or similar acceptable method.

B. Transmit new product data and samples as required for initial submittal.

C. Transmit revised calculations as required for initial submittal.

D. Create revision from original submittal in the web-based construction management program.

E. Include all other approved materials from previous submittals in revised submittal package for a complete standalone document.

END OF SECTION

SECTION 01 42 00
REFERENCES

PART 1 - GENERAL

1.01 SUMMARY

This Section Includes:

A. Administrative and Procedural Requirements for:

1. Specification Format and Conventions
2. Abbreviations and Acronyms used throughout the Contract Documents
3. Definitions used throughout the Contract Documents

B. Related Sections: Reference VCSS

1.02 ADMINISTRATIVE REQUIREMENTS

A. Abbreviations and Acronyms:

1. Certain abbreviations and acronyms contained in the Contract Documents are defined particularly for these specifications.
2. Where acronyms are not defined, they mean the recognized name of the standard, regulation, or organization indicated in either

   a. “Encyclopedia of Associations: National Organizations of the U.S.” published by Gale/CENGAGE Learning; or
   b. “National Trade and Professional Associations of the United States” published by Columbia Books & Information Services.

B. Definitions:

1. Basic Contract Document definitions are included in VCSS 1-2.
2. Certain terms, phrases, and words and their derivatives, contained in the Contract Documents are defined particularly for these Specifications in either this Section or within the appropriate Specification Section where a specific term is used.
3. Where terms, phrases or words, and their derivatives and abbreviations, are not defined, their ordinary meanings indicated in “Webster’s Third New International Dictionary of the English Language, Unabridged”, copyright 1986, are assumed to apply as the context of usage requires.
4. Words implied, but not stated, are inferred as the context of usage requires.
5. Terms, phrases and words used in the neuter gender include the feminine and the masculine; the masculine gender includes the feminine and neuter; and the feminine gender includes the masculine and neuter. Similarly, when the context requires, the singular includes the plural and the plural the singular.
6. Underlined, bold, or capitalized words do not signify, imply or convey any special or unusual meaning; nor do they signify, imply or convey that words not underlined, bolded, or capitalized have any less meaning.

1.03 REFERENCES

A. Abbreviations:
   1. Basic Contract Abbreviations are included in VCSS 1-3.2.

B. Acronyms:

   1. AA Aluminum Association
   2. AAMA Architectural Aluminum Manufacturer's Association
   3. AHJ Authority (Authorities) Having Jurisdiction
   4. AISI American Iron and Steel Institute
   5. ANSI American National Standards Institute
   6. ASTM American Society for Testing and Materials
   7. AWS American Welding Society
   8. CARB California Air Resources Board
   9. CFS Cold-Formed Steel.
   10. CHPS The Collaborative for High Performance Schools
   11. CRI Carpet and Rug Institute
   12. DFT Dry Film Thickness
   13. DSA Division of the State the Architect
   14. EPA U.S. Environmental Protection Agency.
   15. FSC Forest Stewardship Council
   16. FSI Flame Spread Index
   17. GEI GREENGUARD Environmental Institute
   18. HDG Hot Dip Galvanized
   19. IOR Inspector of Record
   20. LEED Leadership in Energy and Environmental Design
   21. NFPA National Fire Protection Association.
   22. OSHPD Office of Statewide Health Planning and Development
   23. HDG Hot Dip Galvanized
   24. MFMA Metal Framing Manufactures Association
   25. MSG Manufacturer's Standard Gage
   26. NOMMA National Ornamental Metals Manufacturer's Association
   27. SC Service Condition
   28. SCAQMD South Coast Air Quality Management District
   29. SCS Scientific Certification Systems
   30. SDI Smoke Developed Index
   31. SSMA Steel Stud Manufacturing Association
   32. SSPC Society for Protective Coatings.
   33. SWG Standard Wire Gage
   34. TCA Tile Council of America
   35. UBC Uniform Building Code.
   36. UL Underwriters Laboratories.
   37. USGBC U.S. Green Building Council
   38. VCSS Ventura County Standard Specifications
   39. RWQCB Rain Water Quality Control Board
   40. IAPMO International Association of Plumbing & Mechanical Officials
   41. SMACNA Sheet Metal and Air Conditioning Contractors National Association
   42. APCD Air Pollution Control District
   43. SWPPP Stormwater Pollution Prevention Plans

C. Definitions:

   1. **Aboveground**: Situated completely on or above the final finish grade or surface of the ground, or finish floor of grade-level floor construction. Other similar terms, including "above grade" are synonymous with "aboveground". Locations that do not meet the

definition above for “aboveground” are considered “below ground” or “below grade”, and similar locations.

2. **Appearance**: Characteristic visible aspect of an item specifically, its color, sheen and texture.
3. **Approved**: Recognized in writing by the Architect as in conformance with the requirements of the Contract Documents. Other terms, including “approve”, “approval”, and similar terms are synonymous with “approved”.

    a. Approvals are restricted to limitations of the Architect’s responsibilities and duties outlined in the Conditions of the Contract, without any implied meaning extending the Architect's responsibility into the Contractor's area of the Contractor coordination, supervision, or means and methods of construction as outlined in the Conditions of the Contract.
    b. In no situation does an approval by the Architect release the Contractor from responsibility to fulfill all requirements of the Contract Documents.

4. **Approved Substitute**: A Substitution proposed and evidenced by the Contractor as either in compliance with or exceeding the quality of specified products, systems or methods of execution relative to appearance, convenience and practicality, including product considerations, manufacturer considerations, manufacturer’s product representative considerations, installation considerations and cost considerations, and approved by the Architect for incorporation into the work.
5. **As Indicated**: Shown on the Contract Drawings.
6. **As Necessary**: Essential to the completion of the work.
7. **As Required**: Either (a) as instructed by the Contract Documents or (b) essential to the completing the work.
8. **Assembly**: A composite entity composed of various parts fit together in an orderly way, usually with logical selection or sequence, so as to make into an operative whole (e.g., a stair or curtain wall assembly)
9. **Authority (Authorities) Having Jurisdiction**: Agencies, either individually or collectively, charged by statute with administration and enforcement of building code requirements and other regulations at the project location.
10. **Below Ground**: See definition of “Aboveground”.
11. **Board**: Sawn timber measuring less than 2-inches in nominal thickness at the least dimension.
12. **Building Information Model**: Digital computer data used by the Architect as instruments of service to produce Contract Documents, including 2-dimensional and 3-dimensional computer model and drawing files in CAD format and spreadsheet or word processing files.
13. **Cold-Formed Metal Framing**: Structural metal framing members having a base metal thickness range of between 118 mils (10-gage) and 33 mils (20-gage) and installed in transverse and axial load-bearing applications.
14. **Concealed**: Embedded in concrete, masonry or other construction located or installed within furred spaces, situated within walls or partitions, suspended above ceilings or placed in trenches, crawl spaces or enclosures, are otherwise not visible, either outside the building or inside occupied space within the building, during normal activity when the project is completed, or that is identified as exposed on Drawings.
15. **Component**: One of a group of individual parts of which a subassembly, assembly or system is comprised; especially a part that can be separated from or attached to the group.
16. **Concealed**: See definition for “Exposed”.
17. **Defective**: A product, system, or method of execution that has failed, or that otherwise does not comply with the requirements of the Contract Documents. Other similar terms, including “defect” and “defective work”, are synonymous with “defective”. See definition for “failure” for a partial list of defects, which are not limited to those indicated.

18. **Dimension Lumber**: Sawn timber measuring between 2-inches and 5-inches in nominal thickness at the least dimension.
19. **Directed**: Written instruction issued by the Architect to the Contractor. Other similar terms, including “authorized”, “permitted” and “requested”, are synonymous with “directed”.
20. **Enclosure**: Level of protective resistance to weather for interior spaces provided during the construction phase by either permanent construction or substantial temporary closures. Other similar terms, including “enclosed” are synonymous with “enclosure”.

    a. **Uncontrolled Enclosure**: Short-term, limited, temporary protection against wind for up to (6) six months before completion of the permanent enclosure, as determined by the Architect.
    b. **Partially-Controlled Enclosure**: Medium-term, limited, temporary protection against both wind and rain for up to (12) twelve months before completion of the permanent enclosure, as determined by the Architect.
    c. **Permanent Enclosure**: Complete permanent protection against wind, temperature, humidity, atmospheric pressure and precipitation, provided by a permanent insulated and weathertight roofing system, permanent insulated and weathertight exterior wall construction and openings closed with permanent construction or substantial temporary closures equivalent in protection to permanent construction, as determined by the Architect.

21. **Engineering Services**: Services performed for the design, fabrication and installation of components and assemblies similar in material, design, complexity and extent to those indicated or required for this project.
22. **Equipment**: A product with operational parts and controls, whether motorized or manually operated, that requires service connections including wiring, piping or similar connections.
23. **Ex situ**: Either off-site or away from the position an item will ultimately occupy.
24. **Existing Products**: An item salvaged or recycled from the project or from another project or facility, where indicated, and incorporated into the work.
25. **Exposed**: An item that either does not meet the definition above for “concealed”, or that is identified as exposed on Drawings.

    a. **Weather-Exposed**: Floor, wall, soffit, ceiling, roof or similar surface that is exposed to unconditioned wind, temperature, humidity, atmospheric pressure or precipitation, except:

        1) Ceilings or roof soffits enclosed by walls or by beams that extend at least 12-inches below such ceilings or roof soffits
        2) Walls or portions of walls within an enclosed roof area when located a horizontal distance from an exterior opening equal to twice the height of the opening
        3) Ceiling or roof soffits beyond a horizontal distance 10-feet from the outer edge of the ceiling or roof soffits

26. **Exterior**: See definition below for “interior”.
27. **Fabricate**: Specifically assemble, or make out of selected materials, to meet individual requirements for the project. Other similar terms, including “fabrication” and “fabricator” are synonymous with “fabricate”.
28. **Factory finished**: Finished off the project site under controlled environmental conditions, requiring no additional finish at the project site except for minor touchup of areas damaged during delivery, storage, handling and installation. Other similar terms, including “shop-applied” and “prefinished”, are synonymous with “factory finished”.
29. **Failure**: The inability of an item, system, assembly, or method of execution to perform its intended function as designed, including incipient and catastrophic failure.

a. **Incipient Failure**: Initial or nascent non-catastrophic failure of a product or system, or a method of execution leading to such a failure, including:

1) Excessive material loss due to abrasion resulting from normal traffic
2) Cracking, flaking, spalling or eroding in excess of specified requirements
3) Peeling or delaminating from substrate
4) Staining of adjacent surfaces caused by migration of materials, components or accessories
5) Buckling, deflection or other structural performance exceeding the specified limits
6) Performance either exceeding maximum specified performance requirement limits or falling below minimum specified performance requirement limits
7) Stresses transferred from supporting framing members to other items that are not engineered to support or resist the transferred loads
8) Material fatigue, including deterioration, cracking or brittleness, identified by inspection, data analysis or other means of detection
9) Displacement of glazing gaskets
10) Loosening, weakening or permanent damage to fasteners, anchors, attachments and other components
11) Vibration or noise caused by thermal or structural movement or wind, including rattle and flutter

b. **Catastrophic Failure**: Discernible failure impossible to acceptably remedy or correct in place, or that necessitates remedial repair, in each case as determined by the Architect, including:

1) Buckling, deflection or other structural performance necessitating remedial repair
2) Failure of operable units to open or close, or to otherwise achieve the full range of design movement
3) Permanent deformation of any material or component exceeding specified limits
4) Breakage or fallout from an assembly of any material or component
5) Air infiltration or water leakage
6) Material adhesive or cohesive failure, including tearing
7) Corrosion, staining or other deleterious effects due either to physical contact of dissimilar metals or to water runoff passing over dissimilar metals
8) Water leakage
9) Loss of waterproofing integrity, allowing the intrusion of water, oils, gasoline, grease, salt, chemicals, acids or other fluids to outside surface of substrate
10) Chalking or color changes relative to a control sample of the original application beyond those described in manufacturer-published information

30. **Furnish**: To supply and deliver an item to the project site in an operable condition, ready for unpacking, assembly, and installation.
31. **Heavy Timber**: Sawn timber measuring 5-inches or more in nominal thickness at the least dimension.
32. **Include**: Inclusion without limitation, in the largest encompassing sense. Other similar terms, including “such as” are synonymous with “include”.
33. **Indicate**: Expressed by graphic representations or in written form on the Contract Drawings, or elsewhere in the specifications, without limitation of location, unless specifically noted. Other similar terms, such as “indicated’, “shown”, “noted” and “scheduled”, are synonymous with “indicated”.
34. **In situ**: Means in the position an item will finally occupy.
35. **Install**: Handle, unload, store, unpackage, assemble, erect, construct, place, anchor, apply, connect, work to dimension, complete, finish, cure, adjust, clean, protect and similar operations at the project site, in final position, and in operable and useable condition.

36. **Installer**: Contractor or other entity engaged by the Contractor as an employee, subcontractor, or sub-subcontractor to perform a particular construction operation at the project site, including preparation, erection, installation, application, construction, re-installation and similar operations required for execution of the work.
37. **Instructions**: Written directions, diagrams, recommendations, precautions, specifications and similar instructions published by a product supplier, manufacturer or fabricator.
38. **Interior**: Conditioned space or pertaining to conditioned space that is completely enclosed by floor, wall, and ceiling or roof construction, and solid doors or fenestration systems. Ventilated unconditioned spaces are not interior spaces.

    a. Semi-Exterior: An unconditioned or semi-heated space or pertaining to unconditioned or semi-heated space that is completely enclosed by floor, wall, and ceiling or roof construction, and solid doors or fenestration systems through which thermal energy may be transferred to or from interior spaces, other semi-exterior spaces, or the exterior. Ventilated unconditioned spaces are not semi-exterior spaces.
    b. Exterior: A space that does not meet the definition above for either an “interior” or a “semi-exterior” space.

39. **LEED**: U.S. Green Building Council (USGBC) Leadership in Energy & Environmental Design rating system.
40. **Lightgage Metal Framing**: Non-structural metal framing members having a base metal thickness of 30 mils (20-gage) or less and installed in non-load-bearing interior construction assemblies supporting plaster or gypsum board.
41. **Manufacture**: Produce standard, custom or proprietary units generally utilizing a mass-production method. Other terms, including “manufactured”, “manufacturer”, and similar terms, have the same meaning as “manufacture”.
42. **Match**: Provide a portion of the work using the same product, system or execution method identical in dimension, finish, color, texture, and work results to one of the following, as determined by the Architect.

    a. Another portion of the work.
    b. Existing conditions adjacent to new work.
    c. A design reference sample in the Owner’s or the Architect’s possession.
    d. An approved sample, range of samples, mockup or sample panel.

43. **Material**: A basic substance, often a commodity, used in construction or to manufacturer products and other items used in construction.
44. **May**: “Has discretion to”, “is permitted to” or “is authorized to”. See definitions below for “must” and “shall”.
45. **Must**: “Is required to” when used to impose an obligation on someone or something other than the object of a sentence; or when the active subject is incapable of assuming a duty or obligation. See definition above for “may” and definition below for “shall”.
46. **Non-Roof Surface**: Top cover of a building having a slope more than 60 degrees from the zero-degree horizontal plane.
47. **Or Equal**: See definition above for “approved substitute”.
48. **Partially-Controlled Enclosure**: See definition above for “enclosure”.
49. **Permanent Enclosure**: See definition above for “enclosure”.
50. **Permanent Deformation**: Displacement or change in dimension of a material or component after an applied load has been removed and the specimen has relaxed for specified period of time.
51. **Practical**: Useful, based on previous experience.
52. **Practicable**: Useable for a specific purpose capable of being done with means at hand and circumstances as they are.
53. **Product**: Components, or assemblies of components, purchased for permanent incorporation into the work, whether purchased specifically for the project or taken from previously purchased stock that was not previously incorporated into another project or

facility. Other similar terms including “manufactured units”, “equipment” and “accessories”, are synonymous with “products”.

54. **Provide**: Furnish and install, complete and in-place, ready for operation and use. Whenever the terms “furnish”, “install” or “provide” are not explicitly stated, the term “provide” is implied.
55. **Regulation**: A law, ordinance, statute, or lawful order issued by authorities having jurisdiction, and rules, conventions, or agreements within the construction industry that prescribe performance of the work.
56. **Related Trades**: Installers, applicators, erectors, constructors and fabricators whose work will come into contact with, will penetrate, is directly adjacent to, or is otherwise integral to or materially impacted by the work of a given scope.
57. **Roof Surface**: Top cover of a building having a slope of 60 degrees or less from the zero-degree horizontal plane.
58. Samples:

    a. **Design Reference Sample**: Samples of appearance (color, texture, sheen and finish), pre-approved by the Architect.
    b. **Sample**: Samples of appearance (color, texture, sheen and finish), submitted to the Architect for review and approval.
    c. **Field Sample**: Physical examples illustrating proposed finishes, coatings, or finish such as concrete, brick, or stone, installed or applied in the field for review by the Architect.
    d. **Sample Panel**: Scaled-down pre-production samples incorporating full-scale details of architectural features, finishes, textures, transitions and repair techniques for review by the Architect.
    e. **Mock-Up**: Full-size assemblies erected for review of construction, coordination of the work specified in several sections, testing, operation, training of the trades and similar activities, and aesthetic or other for review by the Architect.

59. **Section**: A numbered and titled portion of these Specifications.
60. **Selected Products**: Materials, products, components and accessories selected by the Contractor from among specified materials, products, components and accessories, or from approved substitution requests, for inclusion into the project. Other **similar** terms including “selected materials”, “selected manufactured units”, “selected equipment”, “selected components”, “selected accessories”, “selected mixes”, **are synonymous with** “selected products”.
61. **Service Condition (SC)**: Means a benchmark used to measure a product, assembly or system’s exposure to weather or abrasion expressed by one of the following.

    a. **Very Severe Exposure (SC-4)**: Exposed to harsh conditions or subject to frequent exposure to moisture, chemicals, cleaners and saline solutions, plus likely damage by denting, scratching or abrasive wear.
    b. **Severe Exposure (SC-3)**: Exposure to condensation, perspiration, infrequent wetting by rain, and cleaners.
    c. **Moderate Exposure (SC-2)**: Exposure mostly to dry indoor atmospheres but subject to occasional condensation, wear, or abrasion.
    d. **Mild Exposure (SC-1)**: Exposure to indoor atmospheres with rare condensation and subject to minimum wear or abrasion.

62. **Shall**: “Has a contractual obligation or duty to” when used to convey a contractual obligation imposed on the subject of a sentence. See definitions above for “may” and “must”.
63. **Similar**: A portion of work that matches the whole or part, as indicated, of another portion of the work, but has a different geometric configuration.
64. **Submit**: Contractor to prepare and present written or graphic evidence to the Architect for approval, unless otherwise stated.

65. **Substitution**: An unspecified product, system or execution method proposed by a Bidder or the Contractor for incorporation into the work.
66. **Suitable**: Meant or adapted for the purpose indicated or intended by the Contract Documents, as determined by the Architect. Other terms including “reasonable”, “proper”, “correct”, “necessary”, and similar terms, have the same meaning as “suitable”.
67. **Symmetrical**: A portion of work that matches either itself or the whole or part of another portion of the work, as indicated, the geometric configuration of which is reflected about a centerline or axis of a surface or a space; or rotated around a point in space.
68. **System**: A group of many, often diverse parts joined in regular interaction or interdependence, and subject to a common plan or serving a common purpose to form an integral, organic, or organized whole (e.g., a suspended acoustical ceiling system)**.**
69. **Timber**: The wood of trees cut and prepared for use as building material.
70. **Uncontrolled Enclosure**: See definition above for “enclosure”.
71. **Underground**: Location that does not meet the definition above for “aboveground” or “above grade”.
72. **Wall**: One of the sides of a room or building connecting a floor and ceiling or foundation and roof and having a slope less than 30 degrees from the 90-degree vertical plane.
73. **Weather Exposed**: See definition below for “exposed”.
74. **Wet Work**: Materials that need moisture or water added as part of application or installation, which subsequently dry are considered to be wet work (e.g., concrete, plaster, drywall mud, paints and coatings, sealants, etc.**)**
75. **Work Result**: Results of applying particular skills and techniques to construction materials, products, assemblies and systems.

    a. A work result may pertain to either several manufactured products (e.g., exterior insulation and finish system) or a single product (e.g., a chalkboard).
    b. A work result could also involve only labor and equipment (e.g., a trenching).

1.04 REFERENCE STANDARDS

A. General: Work specified by reference to a standard or specification published by a government agency, technical association, trade association, professional society or institute, testing agency, or other organization must either meet or exceed the minimum standards of quality for materials and workmanship established by the designated standard or specification.

    1. Each entity engaged in construction on the project must be familiar with the specified industry standards applicable to that entity’s construction activity.
    2. In case of conflict between referenced standards and documents and the Contract Documents, or between referenced documents, the document having the most stringent requirements applies. Submit discrepancies to the Architect for a decision before proceeding with the affected work any requirements that are different but apparently equal, and uncertainties as to which quality level is more stringent.
    3. Where both a standard and a brand name are specified for a product in the project Manual, the proprietary product named must conform to or exceed the requirements of the specified reference standard. The listing of a trade name in a Project Manual may not be construed as warranting that such product conforms to the respective reference standard.

B. Applicability:

    1. The applicable edition of a reference standard or specification is the latest date of issue (a) (30) thirty days before bids are received; (b) when bids are requested; or (c) if there is no bid, then on the effective date of the Agreement, except:

a. Where a specified publication date follows the title of a referenced standard or specification in the body text of the Contract Documents.
b. Issues listed in governing building codes and regulations supersede the above requirements.

2. Provisions of any referenced standards or specifications, whether or not specifically incorporated by reference in the Contract Documents, may not change the duties and responsibilities of the Owner, the Architect, the Contractor, or any of their consultants, agents or employees from those set forth in the Contract Documents, nor to assign to any of them any responsibility, duty or authority for safety precautions or procedures, or to supervise or direct the performance of the work.

PART 2 - PRODUCTS

2.01 COPIES OF STANDARDS

A. Copies of applicable referenced standards and specification are not bound in the Project Manual.

B. Where copies of standards are needed for superintendence and quality control of the work, obtain a copy or copies directly from the publication source and maintain copies in an orderly manner at the project site, available to the Contractor's personnel, subcontractors, the Owner, and the Architect during normal business hours.

PART 3 - EXECUTION (NOT APPLICABLE)

END OF SECTION

SECTION 01 43 00
QUALITY ASSURANCE

PART 1 - GENERAL

1.01 SUMMARY

This Section Includes:

1. Administrative and Procedural Requirements for:

    1. Quality Assurance and Quality Control activities.
    2. Testing and inspecting services necessary to verify conformance with indicated or specified requirements.

2. Related Requirements:

    1. Section 01 43 39 for administrative and procedural requirements for mockups, laboratory testing specimens, and field samples.

1.02 REFERENCES

1. Abbreviations and Acronyms:

    1. CCA Construction Contract Administration
    2. NIST National Institute of Standards and Technology
    3. NRTL Nationally Recognized Testing Laboratory
    4. NVLAP National Voluntary Laboratory Accreditation Program
    5. QA Quality Assurance
    6. QC Quality Control

2. Definitions:

    1. Field Quality Control Testing: Tests and inspections of installed work performed by a qualified testing agency are acceptable to the AHJ at the project site.
    2. Pre-Construction Testing: Tests and inspections performed specifically for the project to verify performance or compliance with the specified criteria before products and materials are incorporated into the work
    3. Product Testing: Tests and inspections performed by a qualified testing agency acceptable to the AHJ to establish product performance and conformance to specified industry standards.
    4. QA Services: Activities, actions and procedures implemented before and during the execution of the work to guard against defects and deficiencies, and result in construction that conforms to the requirements of the Contract Documents.
    5. QC Services: Activities, actions and procedures, including tests, inspections, procedures, and related actions that are implemented during and after the execution of the work to measure and evaluate whether in-service items and completed construction conforms to the requirements of the Contract Documents. Services do not include CCA activities performed by the Architect.
    6. Required Auxiliary Services:

        a. Provide access to the work for testing and inspection and furnish incidental labor and facilities necessary to facilitate tests and inspections.

b. Take adequate quantities of representative samples of materials required for specified testing or assist the agency in taking samples.
c. Provide facilities for storage and curing of test samples and deliver samples to testing laboratories.
d. Provide testing and inspection agencies with preliminary design mixes proposed for use where mixes require control by a testing agency.
e. Provide security and protection of samples and test equipment at the project site.

7. Source Quality Control Testing: Tests and inspections performed by a qualified testing agency acceptable to the AHJ at the source (i.e., the plant, mill, factory, or shop).
8. Testing Agency: Entity appointed to perform specific tests, inspections or both. The term "testing laboratory" is synonymous with "testing agency".

   a. NRTL NRTL conforming to the requirements of 29 CFR 1910.7
   b. NVLAP Testing agency accredited in conformance with NIST's NVLAP

9. Installer: Contractor or other entity appointed by the Contractor as an employee, subcontractor, or sub-subcontractor to perform a particular construction operation, including installation, erection, application and similar operations. Other terms, including "applicator" and "erector" are synonymous with "installer".

1.03 ADMINISTRATIVE REQUIREMENTS

1. Conflicting Requirements:

   1. If conformance with (2) two or more requirements or standards is specified, and if requirements or standards appear different or in conflict, the most stringent requirements or standards govern. Promptly submit an RFI to the Architect for interpretation before proceeding with the work.
   2. Notify the Architect of uncertainties and requirements that are different, but apparently equal for an interpretation before proceeding with the work.

2. Coordination: Coordinate sequence of activities to accommodate required QA and QC services with the least practicable delay, and to avoid removing and replacing construction to accommodate testing and inspecting.

3. Scheduling: Schedule times for testing, inspections, sampling and similar activities.

1.04 SUBMITTALS

1. Certificates: Submit copies of permits, licenses, certifications, releases, jurisdictional settlements, notices, receipts for fee payments, judgements, correspondence, records, and similar documents established for conformance with standards and regulations necessary for the performing the work.

2. Inspection Reports:

   Submit certified written reports that include the following:

   1. Date of issue
   2. Project title and number
   3. Name, address and telephone number of the testing agency
   4. Dates and locations of samples, tests and/or inspections
   5. Names of the individuals performing tests and inspections

6. Description of work, testing and inspection methods
7. Identification of tested or inspected product and the Specification Section
8. Complete test and/or inspection data
9. Test and inspection results along with an interpretation of the results
10. A record of the temperature and weather conditions at time of sampling, testing and inspection
11. Comments and/or professional opinions on whether tested or inspected work conforms to the Contract Document requirements
12. Name and signature of inspector
13. Recommendations for re-testing and re-inspection

1.05 QUALITY ASSURANCE

1. Testing Agency Qualifications: Must be an NRTL, NVLAP, or independent agency conforming to the requirements of ASTM E 239 and acceptable to the AHJ, with at least (10) ten consecutive years experience providing testing and inspection services on a weekly basis for projects similar in material, design, complexity and extent to this project, and whose products have resulted in applications with a record of successful in-service performance.

PART 2 - PRODUCTS (NOT USED)

PART 3 - EXECUTION

3.01 QUALITY CONTROL

1. Quality Control Services:

    1. Where the AGENCY requires testing and inspection, such tests and inspections are performed by a qualified independent testing and inspection agency acceptable to the Architect and the AHJ; and must be witnessed by the testing agency's personnel, the applicator, the Contractor, and the AGENCY.

        a. The Owner furnishes the Contractor with names, addresses, and telephone numbers of testing agencies appointed and a description of the types of tests and inspections they are to perform.
        b. The Contractor shall coordinate with AGENCY inspectors to:

            1) Arrange all tests and inspections
            2) Coordinate its work and the construction schedule with the specified tests
            3) Coordinate the requirements of each required or specified test and inspection with other specified or required tests and inspections
            4) Provide all work, facilities, personnel and controls necessary for each test and inspection
            5) Notify the testing agency personnel, the applicator, the waterproofing membrane manufacturer's field representative and the Architect that the work is ready for inspection
            6) Receive all test reports and distribute copies to the applicator and the waterproofing membrane manufacturer's field representative

    2. Where quality control services are indicated as the Contractor's responsibility, engage a qualified testing agency to perform these quality-control services.

a. The Contractor may not employ the same entities appointed by the AGENCY, unless agreed to in writing by the AGENCY.
b. Notify testing agencies at least (24) twenty-four hours in advance of when work requiring testing or inspection will be performed.
c. Submit a certified written report to the AGENCY of each quality control service performed.
d. Submit additional copies of each written report directly to all authorities having jurisdiction, when so directed.

3. Testing and inspections not explicitly assigned to the AGENCY are the Contractor's responsibility.

   a. Unless otherwise indicated, provide quality control services (1.) Required by the Contract Documents and (2.) Required by the AHJ.
   b. Perform quality-control services required of the Contractor by the AHJ, whether specified or not.

4. Testing and inspections requested by the Contractor that are not required by the Contract Documents are the Contractor's responsibility.
5. Contractor to provide quality control services, including re-testing and re-inspection for work to replace construction that failed to comply with the Contract Documents, regardless of whether original testing or inspections were the Contractor's responsibility.

2. Testing Agency Responsibilities:

   1. Testing and Inspection Agencies are required to:

      a. Provide qualified personnel to perform required tests and inspections.
      b. Notify the AGENCY and Contractor promptly of irregularities or deficiencies observed in the work during performance of its services
      c. Determine the location from which test samples are taken and in which in-situ tests are conducted
      d. Conduct and interpret tests and inspections, and state whether tested and inspected work conforms to the specified requirements in each report
      e. Submit certified written reports of each test, inspection, and similar quality control services to the AGENCY through the Contractor

   2. Testing and Inspection Agencies may not:

      a. Release, revoke, alter, or increase any Contract Document requirements
      b. Approve or accept any portion of the work
      c. Perform any of the Contractor’s duties

3. Manufacturer Services: Where specified, the work may be subject to examination by the manufacturer’s field representative.

   1. As the work progresses, the manufacturer’s field representative periodically examines for defective materials, defective fabrication and/or application (workmanship) and conformance to the manufacturer’s application instructions and other requirements.

      a. Verify areas have not been missed.
      b. Note defects and identify conditions and items that do not conform to the manufacturer’s application instructions and other requirements.

2. During each field representative visit, itemize into a punchlist all defects, improperly performing items, and nonconforming conditions and items.
3. For each item listed, record the field representative's recommendations for correcting each defect and improperly performing item, or for bringing each nonconforming condition or item into conformance to the manufacturer's application instructions and other requirements.
4. Before final inspection or acceptance, schedule a meeting at the project site with the manufacturer's field representative to review surface preparation and application procedures.

    a. Invite all parties that were present at the Pre-Installation meeting to attend.
    b. Notify invitees at least (10) ten days before the scheduled meeting.

4. Nonconforming Work: When testing reveals items that are deficient, faulty, do not perform properly, or do not conform to the specified requirements, make corrections acceptable to the AGENCY, then arrange and pay costs for re-testing until it can be demonstrated that all items perform properly and conform to the specified requirements, as determined by the AGENCY.

5. Associated Services: Cooperate with agencies performing required tests, inspections, and similar quality-control services, and provide reasonable auxiliary services as requested. Notify agency sufficiently in advance of operations to permit assignment of personnel.

END OF SECTION

SECTION 01 45 16
CONTRACTOR QUALITY CONTROL

PART 1 - GENERAL

1.01 SUMMARY

This Section Includes:

A. Administrative and Procedural Requirements for Quality Control of the work.

1.02 REFERENCES

A. Required Auxiliary Services:

1. Provide access to the work for testing and inspection and furnish incidental labor and facilities necessary to facilitate tests and inspections.
2. Take adequate quantities of representative samples of materials required for specified testing or assist the agency in taking samples.
3. Provide facilities for storage and curing of test samples and deliver samples to testing laboratories.
4. Provide testing and inspection agencies with preliminary design mixes proposed for use where mixes require control by a testing agency.
5. Provide security and protection of samples and test equipment at the project site.

1.03 ADMINISTRATIVE REQUIREMENTS

A. Contractor's Quality Control Program:

1. Establish a quality control program to perform sufficient testing and inspection of all items of work, including that of all subcontractors, to ensure conformance with the Contract Document requirements for materials, workmanship, construction, finish, functional performance and identification.

   a. Quality control programs must ensure the work conforms to the requirements of the Contract Documents.
   b. Quality control must be adequate to cover all construction operations.

2. Apply, install, connect, erect, use, clean, adjust and condition items in compliance with their manufacturer's instructions, unless more restrictive or stringent requirements are stated in the Specifications.

3. In the event of conflicts between the manufacturer's instructions and the Contract Documents, the manufacturer's installation instructions govern. Promptly submit an RFI to the AGENCY for interpretation before proceeding.

B. Contractor Assistance:

1. Cooperate with testing and inspecting agencies, other companies providing similar services and provide reasonable auxiliary services as requested.

1.04 QUALITY ASSURANCE

A. Installer's Qualifications: Where the Specifications dictate a certain level of experience or expertise from the installer by requiring a minimum number of years of experience in the successful installation of a product or a minimum number of successful installations for the product specified, it is the Contractor responsibility to:

1. Verify the installer's competence and track record before signing a subcontract to perform the affected work.
2. Collect evidence of the specified minimum qualifications and retain such evidence in the event of an audit.

1.05 ADMINISTRATIVE STAFF

A. Provide competent and adequate staff for administration, coordination, supervision, and superintendence of the work.

1. Key staff members must be full time employees operating full-time at the project site.
2. Key members of this staff are not to be changed without written consent from the AGENCY, unless such staff members prove to be unsatisfactory to the Contractor and cease to be in employ. If the Contractor intends to change a key staff member, the Contractor shall give the AGENCY written notice at least (15) fifteen business days before the intended change.

B. The Contractor's Project Administrative Staff must include the following:

1. Project Manager: A person with the responsibility for prosecution of the work and who has the authority to act in matters of coordination, direction and technical administration of the work. Provide the AGENCY with name of the Project Manager before commencement of the work. Project Manager shall have a minimum of (5) five years of experience on OSHPD/HCAI, Fire Station, Public Works projects and/or projects of similar complexity.
2. Superintendent: A person in attendance at the project site during performance of the work that represents the Contractor. Superintendent shall have a minimum of (5) five years of experience on OSHPD/HCAI, Fire Station, Public Works projects and/or projects of similar complexity.
3. For each day work is performed at the site between the start date specified in the contract proposal and the acknowledgement of completion of Work specified in VCSS Section 6-8 for which the above required project superintendent is not at the job site, or each working day the above project manager assigned to this project is not employed by the Contractor, the Contractor will be assessed liquidated damages of $1,100.00 per day. The project manager can temporarily act in the capacity of the project superintendent in the event of temporary illness, vacation, or emergency to the project superintendent. Alternatively, in the event of illness, vacation, etc., a superintendent may be substituted per the provisions of Section B, below. These liquidated damages are in addition to those specified elsewhere.

PART 2 - PRODUCTS (NOT USED)

PART 3 - EXECUTION

3.01 EXAMINATION

A. Prior to installation of any material, product, component, system, assembly or equipment, verify existing work performed that was part of the work of other Sections, conforms to the installed item manufacturer's application tolerance requirements; provides application, durability, appearance, and performance.

3.02 INSTALLATION

A. Proceeding with installation or application stipulates the Installer's or Applicator's acceptance of existing conditions. After starting work, the Installer or Applicator performs remedial work necessary to correct deficient conditions to bring them into conformance with the manufacturer's installation or application requirements.

B. Where Specifications require items that are subject to examination by the manufacturer's field representative, the manufacturer's field representative periodically examines for defective materials, defective fabrication and/or application (workmanship) and conformance to the manufacturer's application instructions and other requirements.

END OF SECTION

SECTION 01 45 23
TESTS AND INSPECTIONS

PART 1 - GENERAL

1.01 GOVERNING BUILDING CODES

A. Governing Codes: California Building Code 2019 Edition

1.02 SUMMARY AND REQUIREMENTS

A. Provide plant, equipment, transportation, materials, labor and technical services required to perform onsite or offsite sampling, identification, certification, testing, special inspections and reporting as specified herein, and in the technical specifications to establish compliance with the Contract Documents, above-referenced Code Regulations and as necessary, to properly complete the Contract.

1.03 COOPERATION AND ACCESS

A. Any required testing and/or inspections shall be in cooperation with and coordinated with the work and installation schedules of the trades specified in the various Specifications Sections.

B. Cooperation: Contractor shall cooperate with and provide testing laboratory and AGENCY's Inspectors opportunity and assistance in taking samples, making field tests and performing required inspections.

C. The Engineer and AGENCY's Inspector shall at all times have access for the purpose of inspection, identification or sampling to all parts of the work and to the shops where work is in preparation. Contractor shall at all times maintain proper facilities and safe access for such inspection.

1.04 AGENCY INSPECTOR

A. See VCSS 2-13.5.

1.05 TESTING AGENCIES

A. Selection: The AGENCY will provide or designate the testing and inspection organizations and personnel.

1.06 TEST AND INSPECTION REPORTS

A. The Testing Agencies shall report the results of tests and inspections performed in writing and shall furnish the number of copies required herein. The reports shall state that the tests or inspections were made under the responsible charge of a Testing Engineer who holds a license to practice Geotechnical Civil or Quality Engineering in the State of California and that tests and/or inspections were performed in accordance with the provisions of the Specifications and the applicable Building Codes. Test reports shall

show specified design strengths and corresponding test results and shall state whether the tested material either passed or failed to pass the tests.

B. Reports shall be executed immediately upon conclusion of each procedure and copies forwarded to: Engineer, Architect, Structural Engineer, AGENCY's Inspector, Contractor, and the OSHPD Inspector of Record.

1.07 SPECIAL REQUIREMENTS

A. The Engineer and Inspector reserve the right to demand for test or special examination, any material, item or assembly, or parts thereof, to assure compliance with the letter or intent of the specifications. They may reject for satisfactory correction or replacement at the sole expense of the Contractor, any material, workmanship or part thereof judged defective or non-conforming as a result of such test or examination.

1.08 PAYMENT

A. The following testing costs shall be assessed to the Contractor by deductive change order and deducted from amounts due or to become due the Contractor:

1. Testing of unidentified materials.

2. Testing of materials substituted for those specified or previously qualified.

3. Tests, re-tests, re-examinations or special examinations of materials or workmanship found to not comply as specified in Paragraph 1.07 above.

4. Tests or inspections required due to Contractor's error.

5. Excessive costs due to faulty, wasteful or improper scheduling or work practices, failure to conform to accepted schedules or make required notifications.

6. Additional procedures required solely in the interest or convenience of the Contractor, including alternative concrete mix designs.

B. At any time prior to completion of the Contract, should it be considered necessary by the AGENCY to make examinations of or test any work in place by removing or tearing out the same, the Contractor on request shall promptly furnish all required facilities, labor and materials necessary. If such work is found to be defective or non-conforming due to the fault of the Contractor or his subcontractors, he shall defray the cost of such examinations and satisfactory reconstruction. If, however, such work is found to meet the requirements of the Contract, the additional costs involved in the examination and reconstruction shall be allowed the Contractor.

1.09 HCAI INSPECTION

A. This project will be subject to review and approval by the Department of Health Care Access and Information (HCAI) for all Code Compliance and adherence to the HCAI approved drawings. The AGENCY’s contracted Inspector of Record (IOR) will review all documents for this project as well as perform onsite inspections and observations. The State Fire Life Safety Officer (FLSO), Area Compliance Officer (ACO), and other HCAI field staff shall be given full access to the project site at all times. It is the Contractor’s obligation to meet the requirements of the applicable codes and adherence to the HCAI

approved drawings. All reviews and meetings with HCAI will be coordinated with the AGENCY and IOR.

1. Contractor shall allow IOR full access to project at all times Work is in progress.

2. Contractor shall submit Inspection Requests to IOR at least 48-hours in advance to allow for coordination with specialty inspectors in accordance with the Testing, Inspection and Observation (TIO) Program.

3. Acts or omissions of any inspector (including, without limitation, inspector's failure to observe or report deficiencies in Contractor's Work) shall not relieve Contractor from its responsibility to complete Work in accordance with Contract documents.

PART 2 - TESTS AND INSPECTION

2.01 REQUIRED TESTS AND INSPECTIONS

A. Tests and inspections, as set forth in the California Building Code, State Building Code and Titles 22 or 24, specified in detail in the Technical Specifications will be required and paid for by the AGENCY, except as hereinbefore specified.

B. Tests and inspections as indicated in the OSHPD TIO (Testing, Inspection and Observation) Program shall be performed and paid for by the contractor and observed by the IOR.

2.02 FAILED TESTS AND INSPECTIONS

A. When testing is scheduled by the Contractor and the work is not ready for inspection, the AGENCY will deduct the costs incurred from the monies still due to the Contractor. The Contractor will be notified by the AGENCY prior to the processing of the deduction.

B. When testing fails due to deficient work by the Contractor requiring retests, the AGENCY will deduct the costs incurred from the monies still due to the Contractor. The Contractor will be notified by the AGENCY prior to the processing of the deduction.

END OF SECTION

This Page Left Blank Intentionally

SECTION 01 50 00
TEMPORARY FACILITIES AND CONTROLS

PART 1 - GENERAL

1.01 SUMMARY

This Section Includes:

A. Administrative and Procedural Requirements for:

1. Temporary Utilities
2. Support Facilities
3. Miscellaneous Temporary Construction Aids
4. Security and Protection Facilities Installation

1.02 REFERENCES

A. Abbreviations and Acronyms:

1. NECA National Electrical Contractors Association
2. NEMA National Electrical Manufacturers Association
3. NFPA National Fire Protection Association
4. UL Underwriters Laboratories

1.03 SYSTEM DESCRIPTION

A. Design Requirements: Provide design and engineering for construction facilities and temporary controls in compliance with the requirements of the AHJ.

B. Use Charges:

1. Include cost or use charges for temporary facilities and controls in the Contract Sum.
2. Allow other entities to use temporary services and facilities without cost, including the Owner, the AGENCY, the Architect, Testing and Inspection Agencies and the AHJ.

1.04 SUBMITTALS

A. At least (2) two business days before the preconstruction conference and prior to the construction of temporary facilities, submit the following to the AGENCY for information:

1. Site Plan: Show temporary facilities, utility hookups, staging areas and parking areas for construction personnel.

   a. Indicate proposed activity in each portion of the work area and identify the areas of limited use or non-use.
   b. Indicate proposed vehicle access routes to and from the project site and expected frequency of use on adjacent streets.

2. Shop drawings: Submit large scale dimensioned shop drawings of site fencing showing gates and site signs.

1.05 QUALITY ASSURANCE

A. Electric Service: Comply with NECA, NEMA and UL standards and regulations for temporary electric service. Install service in conformance with NFPA 70.

B. Tests and Inspections: Arrange for the AHJ to test and inspect each temporary utility prior to use. Obtain required certifications and permits.

1.06 PROJECT CONDITIONS

A. Temporary Use of Permanent Facilities: Regardless of previously assigned responsibility, the installer of each permanent service assumes the responsibility for operation, maintenance, and protection of each permanent service during its use as a construction facility before the AGENCY's acceptance.

PART 2 - PRODUCTS

2.01 MATERIALS

A. Unless otherwise specified, materials, facilities and equipment utilized for temporary facilities and controls are selected by the Contractor.

PART 3 - EXECUTION

3.01 GENERAL

A. Locate facilities to adequately serve the project and result in minimum interference with performance of the work. Relocate and modify facilities as required by the progress of the work.

B. Provide each temporary facility in a ready-to-use condition when needed and as required avoiding delay. Do not remove temporary facilities until they are no longer needed; or until they are replaced by the AGENCY-authorized use of completed permanent facilities.

3.02 TEMPORARY UTILITY INSTALLATION

A. General: Either install temporary service or connect to existing services. Arrange with the utility company, the AGENCY and existing users for times when services will be interrupted to make temporary service connections.

B. Sewers and Drainage: Provide temporary utilities to legally remove effluent. Connect temporary sewers as required by AHJ.

C. Water Service: Install water service and distribution piping in sizes and pressures necessary for construction.

D. Sanitary Facilities: Provide temporary toilets, wash facilities and drinking water for use by construction personnel. Comply with the requirements of the AHJ for the type, number, location, operation and maintenance of fixtures and facilities.

E. Heating and Cooling: Provide temporary heating and cooling as required for construction activities for curing and drying of completed installations or for protecting installed construction from the adverse effects of low temperatures and high humidity. Select equipment that does not have a harmful effect on completed installations or elements being installed.

F. Ventilation and Humidity Control: Provide temporary ventilation required for construction activities for curing or drying of completed installations or for protecting installed construction from adverse effects of high humidity.

1. Select equipment that does not have a harmful effect on completed installations or elements being installed.
2. Coordinate ventilation requirements to produce ambient conditions required and to minimize energy consumption.

G. Electric Power Service: Provide electric power service and distribution system of sufficient size, capacity and power characteristics to accommodate construction operations.

H. Lighting:

1. Provide temporary lighting with local switching that provides adequate illumination for construction operations, observations, inspections and traffic conditions. Comply with the requirements of the AHJ for the minimum footcandle, type, number, location, operation and maintenance of the lighting.
2. Install and operate temporary lighting that fulfills security and protection requirements without operating the entire system.

I. Telephone Service:

1. Provide temporary telephone service in common-use facilities for use by all construction personnel. Install at least (1) one telephone line for each field office.
2. At each telephone, post a list of important telephone numbers including police and fire departments, the Contractor's home office, the Architect's office and the Owner's office.
3. Provide each superintendent with cellular telephone or portable two-way radio for use away from the field office.

J. Electronic Communication Service:

1. Provide temporary electronic communication service in each field office, including electronic mail.
2. Provide WiFi and make network password available to AGENCY and designers.

K. Sanitary:

1. Contractor shall provide temporary toilet facilities. The Contractor will not be allowed to use the AGENCY restroom facilities, whether in existing facilities or those being constructed.
2. Contractor shall submit proposed location of temporary toilet(s) to the AGENCY’s Representative for approval.
3. Construction personnel will not be allowed to use VCMC Campus restroom facilities for personal or equipment clean-up.
4. Sanitary Facilities shall be in accordance with OSHA regulations.

L. Field Offices, General: Prefabricated or mobile units with serviceable finishes, temperature controls and foundations adequate for normal loading.

1. Common-Use Field Office: Of sufficient size to accommodate needs of construction personnel office activities and to accommodate project meeting specified in other Division 01 Sections. Keep office clean and orderly.
2. Furnish and equip offices as follows:

   a. Furniture required for Project-site documents including file cabinets, plan tables, plan racks and bookcases.
   b. Conference room of sufficient size to accommodate meetings of (10) ten individuals. Provide electrical power service and 120V AC duplex receptacles, with not less than (1) one receptacle on each wall. Furnish room with conference table, chairs and 4-foot square tack board.
   c. Drinking water and private toilet.
   d. Coffee machine and supplies.
   e. Heating and cooling equipment necessary to maintain a uniform indoor temperature of 68 to 72 deg F.
   f. Lighting fixtures capable of maintaining average illumination of 20 fc at desk height.

   AGENCY Office(s): Provide private field office for AGENCY's use in accordance with Section 8 of the VCSS. Private offices are to accommodate at least (3) three AGENCY representatives and shall be equipped with a plan table, mini-fridge, desks and chairs.
3. Storage and Fabrication Sheds: Provide sheds sized, furnished and equipped to accommodate materials and equipment for construction operations.

   a. Store combustible materials apart from building.

3.03 SUPPORT FACILITIES INSTALLATION

A. General: Maintain support facilities until near Substantial Completion and remove them before Substantial Completion. Personnel remaining after Substantial Completion are permitted to use permanent facilities under conditions authorized by the Owner.

B. Temporary Paved Areas: Construct and maintain temporary paved areas adequate for construction operations.

1. Locate temporary paved areas in the same location as permanent paved areas.
2. Extend temporary paved areas as necessary for construction operations and within the indicated construction limits.
3. Coordinate elevations of temporary paved areas with permanent paved areas.
4. Prepare subgrade and install subbase and base layer for temporary paved areas as specified in Division 31 Sections.
5. Recondition base after temporary use, including removing contaminated material, re-grading, proof rolling, compacting and testing.
6. Protect from damage all raised edges and areas around permanent drains, curbs and similar items, located within temporary paved areas.

C. Traffic Controls:

1. Determine the routing of construction vehicles before beginning work, based on restrictions indicated on the Drawings and the safeguards and procedures necessary to carry out the work.
2. Maintain all-weather temporary access to the site and to designated truck unloading area or areas; make access available to all trades.

3. Control construction traffic within and adjacent to the site.
4. Provide entrances, lifts and safeguards required or necessary to the progress of the work and control such traffic to limit hazards to the work and all persons.
5. Route construction equipment, trucks and similar vehicles via existing public streets to and from the site, as approved by the AHJ.
6. Obtain and pay for permits and inspections necessary for the use of public streets, sidewalks, curbs and paving. Post required guarantees and bonds, and repair and make good any damages thereto as required by the AHJ.
7. Construct and maintain temporary walks and bridges for pedestrians. Keep streets adjacent to the site open to vehicular and pedestrian traffic.
8. Maintain unfettered access for law enforcement agencies and for fire and ambulance service.
9. Provide and maintain proper traffic controls for the safety of all persons.

    a. Provide necessary barricades, suitable and sufficient lights, reflectors and danger signals.
    b. Provide warning and closure signs, directional and detour signs.
    c. Provide additional measures as necessary.

10. Indicate restricted and dangerous conditions existing on or adjacent to the site on a 24-hour basis.

    a. Illuminate barricades, danger signals, warning signs and obstructions at night.
    b. Keep warning lights burning from one hour before sunset until one hour after sunrise.

11. Provide adequate traffic control as required for safe delivery.

D. Parking: Contractor to provide temporary parking areas for construction personnel as specified in Section 01 14 13. Location to be approved by AGENCY.

E. Project Identification and Temporary Signs: As specified in Section 01 58 13.

F. Waste Disposal Facilities: Provide waste-collection containers sized to adequately handle waste from construction operations without being piled high or overflowing. Comply with requirements of the AHJ.

G. Lifts and Hoists:

1. Provide facilities necessary for hoisting materials and personnel.
2. Truck cranes and similar devices used for hoisting materials are considered “tools and equipment” and are not temporary facilities.

H. Temporary Elevator Use: As specified in Section 01 12 18 for the temporary use of permanent elevators.

I. Temporary Stairs: Until permanent stairs are available, provide temporary stairs where ladders are inadequate.

J. Temporary Use of Permanent Stairs: Cover finished, permanent stairs with protective covering of plywood or similar material so that finishes are undamaged at time of acceptance.

3.04 MISCELLANEOUS TEMPORARY CONSTRUCTION AIDS

A. Provide and maintain miscellaneous temporary construction aids necessary for proper execution of the work, including stairs, ladders, ramps, railings, canopies, scaffolds and hoists, chutes, barricades, enclosures, platforms, swing staging and walks.

B. Locate in and about the project, as practicable, and where they will not interfere with the progress of the work. Relocate when necessary during construction and remove promptly when no longer needed.

C. Provide openings where required for installing large pieces of equipment.

1. Close openings after the equipment is in place.
2. Restore finishes to a condition matching adjacent surfaces in a manner that does not lead to or result in any warranty becoming void, as determined by the Architect.
3. With respect to the acceptance or rejection of corrected work, the Architect's decision is final. Acceptance by the Architect of corrected work is contingent upon:

    a. Corrections and repairs being performed skillfully.
    b. Corrective or repaired work resulting in sound, permanent construction that is flush and seamless with adjacent surfaces.
    c. Colors and textures matching adjoining and adjacent surfaces, without differentiation.
    d. No visible evidence of correction or repair, nor any other apparent distinction or seam between original and corrected or repaired work.

3.05 SECURITY AND PROTECTION FACILITIES INSTALLATION

A. Environmental Protection: Provide protection, operate temporary facilities, and conduct construction in conformance with environmental regulations, and in a manner that minimizes possible air, waterway and subsoil contamination, pollution or other undesirable effects.

B. Temporary Erosion and Sedimentation Control: Provide measures to prevent soil erosion and discharge of soil-bearing water runoff; and to prevent airborne dust migrating to adjacent properties and walkways in conformance with the requirements of the AHJ.

C. Storm Water Control: Comply with the requirements of the AHJ. Provide barriers in and around excavations and subgrade construction to prevent flooding by stormwater runoff from rain.

D. Tree and Plant Protection: Install temporary fencing located as indicated or outside the drip line of trees to protect vegetation from damage. Protect tree root systems from damage, flooding and erosion.

E. Noise Control: Execute the work to minimize noise. Requirements for operations that may result in high levels of noise and vibration, odors and other disruptions are specified in Section 01 14 13.

F. Pest Control: Engage a pest-control service to recommend practices that minimize attraction and harboring of rodents, roaches and other pests, and to perform extermination and control procedures at regular intervals so the project is free of pests and their residues at Substantial Completion.

1. Obtain an extended pest control warranty for the Owner.
2. Perform pest control operations legally, using environmentally safe materials and methods.

G. Site Enclosure Fence: Before construction operations begin, furnish and install site enclosure fencing in a manner that prevents people and animals from easily entering the project site except by entrance gates.

1. Provide the extent required to enclose the entire project site or portion determined sufficient to accommodate construction operations.
2. Obtain and pay for required permits and inspections.
3. Maintain security by limiting the number of keys and restricting distribution to authorized personnel.

H. Security Enclosure and Lockup: Install substantial temporary enclosure around partially completed areas of construction. Provide lockable entrances to prevent unauthorized entrance, vandalism, theft and similar violations of security.

I. Barricades, Warning Signs, and Lights: Comply with the requirements of the AHJ for erecting structurally-sound barricades, including warning signs and lighting.

J. Temporary Enclosures:

1. Provide temporary enclosures to protect in-progress and completed construction from exposure, inclement weather, and other construction operations and activities. Provide temporary weathertight enclosure for building exterior.
2. Insulate temporary enclosures where heating or cooling is required or necessary and a permanent enclosure is not complete.

K. Temporary Fire Protection:

1. Install and maintain temporary fire-protection facilities as required to protect against reasonably predictable and controllable fire losses. Comply with the requirements of NFPA 241.
2. Provide temporary standpipes and hoses for fire protection.

   a. Hang hoses with warning signs stating that hoses are for fire protection purposes only and may not be removed.
   b. Match hose sizes with outlet sizes and equip hoses with suitable nozzles.

3. Contractor is responsible for maintaining Firewatch when required, at no expense to the AGENCY.

3.06 OPERATION, TERMINATION, AND REMOVAL

A. Supervision: To minimize waste and abuse, limit the availability of temporary facilities to essential and intended uses.

B. Maintenance:

1. Maintain facilities in good operating condition until removal.
2. Maintain operation of temporary enclosures, heating, cooling, humidity control, ventilation and similar facilities on a 24-hour basis where specified, where required to achieve indicated results and to avoid damage.

C. Temporary Facility Changeover: Do not change over from using temporary security and protection facilities to using permanent facilities until Substantial Completion.

D. Termination and Removal: Remove each temporary facility and control when need for its service has ended, when it is replaced by authorized use of a permanent facility or control; or not later than Substantial Completion.

1. Complete or restore permanent construction that was delayed because of interference with a temporary facility or control.
2. Either remove, reinstall, reapply, replace or arrange and pay costs for removing, reinstalling, reapplying, or replacing non-conforming work or items that are deficient, damaged or that cannot be satisfactorily corrected or repaired in a manner that both matches adjacent undamaged areas and shows no evidence of correction, repair or refinishing, as determined by the manufacturer's field representative and the Architect.
3. Materials and facilities that constitute temporary facilities are property of the Contractor. The Owner reserves the right to take possession of project identification signs.
4. At Substantial Completion, clean permanent facilities used during the construction period in conformance with Section 01 74 00.

END OF SECTION

SECTION 01 58 13
TEMPORARY PROJECT SIGNAGE

PART 1 - GENERAL

1.01 SUMMARY

This Section Includes:

A. Administrative and Procedural Requirements for Temporary Project Signage.

1.02 REFERENCES

A. Abbreviations and Acronyms:

1. APA: American Plywood Association.

B. Definitions:

1. Permanent Project Signage: All informational, directional, specialty and code-required signs, required or necessary for identification, communication, way finding and safe and proper operation of the project.
2. Temporary Project Signage: All informational, directional, wayfinding and other signs required by law, code, ordinance, or order of the AHJ, and as required to caution, alert, warn, reroute or redirect pedestrian and vehicular traffic around or away from areas of the Contractor's operations as necessary to provide a safe and proper job site.

1.03 ADMINISTRATIVE REQUIREMENTS

A. The Contractor provides permanent and temporary project signage described in this section and elsewhere in the Contract Documents.

1. The Contractor is solely responsible for the adequacy, conformance and trade practices of safety related signage and all signage required by the AHJ.
2. Temporary project signs must be produced by professional sign painters and be of size and lettering style consistent with use. Colors to be as required by either the AHJ or approved by the AGENCY.
3. Advertising signage and signage identifying subcontractors and materials suppliers are not permitted and may not be displayed.
4. Unauthorized signs are not permitted.

B. The AGENCY may notify the Contractor either before or after the execution of the Contract that it intends to provide some or all the permanent project signage indicated in the Construction Documents as an Owner-Furnished item. In such event the Contractor shall:

1. Reduce the amount of the Contract Sum in accordance with a Change Order.
2. Schedule and coordinate the installation of Owner-furnished signs with the Owner's other contractor or sign installer.
3. Provide structural support for all the Owner-furnished signs as designed by the Architect at a point of connection determined by the Owner and the Architect.
4. Provide all utility connections for the Owner-furnished signs, including all electricity, gas, data and controls, at a point of connection determined by the AGENCY and the Architect.

C. In addition to the temporary signs required by law, code, ordinance or order of the AHJ, and as required for the safe and proper execution of the work, provide and maintain the following:

1. A project identification sign identifying the project, donor information and names with corporate logos of the principal parties responsible for design and construction.

   a. The project identification sign must be painted on a surface at least 4-feet high by 8-feet wide, in not less than (4) four colors.
   b. The AGENCY will provide camera-ready artwork for the project identification sign, including approved text and graphics. The Contractor may not add to, modify or delete any artwork information without prior written approval from the AGENCY.
   c. The project identification sign must be mounted on framework, posts, or other structural supports designed and provided by the Contractor and approved by the AGENCY. Paint all surfaces and edges of sign support structure with one coat of primer and at least one coat of exterior paint with a semigloss finish, in a color to be determined by the AGENCY.
   d. The Contractor shall provide and maintain lighting of the project identification sign from at least dusk to midnight, throughout the duration of the work.

2. The Contractor shall paint and maintain graphics on temporary plywood construction barricades as directed by the AGENCY.

   a. The AGENCY will provide camera-ready artwork for the project identification sign, including approved text and graphics. The Contractor may not add to, modify or delete any artwork information without prior written approval from the AGENCY.
   b. Graphics are painted on the temporary construction barricade, 8-feet high by the length of the barricade as shown in the Contract Documents, in no less than (4) four colors and may include text, images, logos and/or other graphics as determined by the AGENCY.
   c. The Contractor provides and maintains lighting of the temporary construction barricade from at least dusk to midnight, throughout the duration of the work.
   d. The Contractor shall post signage with Contractor's 24/7 contact information at all site entrances in case of emergency.

D. The Contractor, including all subcontractors, vendors, fabricators, consultants and personnel are prohibited from installing any permanent or temporary signs at or around the job site, without prior written approval from the AGENCY.

1.04 SUBMITTALS

A. Submit installation criteria and a sign erection strategy for approval by the AGENCY.

B. Submit shop drawings and samples for all fabricated signs describing and detailing all project conditions, including:

1. Layout drawings, including all physical dimensions, material callouts, notes, typeface, size of lettering and graphics, colors, joints and reveals
2. Material samples
3. Specifications
4. Methods of assembly
5. Structural design and calculations, when required or necessary
6. Electrical services, where required or necessary
7. Mechanical services, where required or necessary

8. Signage locations, including location plans and schedules, and elevations and sections indicating placement and showing relationship to adjacent elements, including all potential conflicts
9. Methods of attachment and installation

1.05 QUALITY ASSURANCE

A. Sign Painter Qualifications: Must have at least (10) ten consecutive years experience providing the design, execution, construction and installation of exterior signs on a weekly basis for projects similar in material, design, complexity and extent to this project, and whose products have resulted in applications with a record of successful in-service performance.

PART 2 - PRODUCTS

2.01 SIGNAGE MATERIALS

A. Provide materials for sign faces, framing, structure and systems that are:

1. New, undamaged and unused at time of installation, including the specified finish
2. Structurally adequate to support signs as indicated or specified
3. Suitable and appropriate for the environmental conditions at the place of installation

B. Provide signs that are complete with all accessories, trim, finishes, hardware, safety guards and other devices and details needed for installation for complete intended use and effect.

C. Unless otherwise specified, temporary signs must be fabricated from at least 3/4-inch thick exterior grade softwood plywood, with medium or high-density phenolic sheet overlay.

1. Provide standard large sizes to eliminate joints.
2. Provide sheet thickness as required to span across framing members and to provide even, smooth surfaces without waves or buckles.
3. Connect sign panels to framework or structure with adequate and appropriate framing connectors.

D. Unless otherwise specified, temporary signs must be shop painted and field installed. Paint back of panels and edges for complete weather resistance and finished appearance.

E. Unless otherwise specified, anchors and fasteners must be of type, grade and class required for intended use, and sized and spaced as required for loads and substrate.

1. Use steel fasteners with cadmium-plating or other rust inhibitive coating in all concealed locations, except:

a. Provide stainless steel fasteners for attaching aluminum
b. Use zinc-coated (galvanized) or stainless steel fasteners in all exterior installations, or where locations are exposed to moisture or humidity

F. Unless otherwise specified, and where permitted by the AGENCY, attach signs using construction adhesive adhering to the requirements of APA Performance Specification AFG-01.

G. Unless otherwise specified, powder-driven fasteners are not permitted, and may not be used in load-bearing installations. Where specified, conform to Fed Spec FF-P-395 or Fed Spec

GGG-D-777. Paint all visible surfaces to match adjacent surfaces, as required by the AGENCY.

PART 3 - EXECUTION

3.01 INSTALLATION

A. For the Contractor installed signs, employ individuals or companies experienced in the installation of signs to perform installation work for all temporary project signs.

1. Acquire all permits required for installation and operation of all temporary and permanent project signs.
2. Locate the project identification sign onsite at a location of high public visibility, adjacent to the main entrance to the site or as directed by the AGENCY.
3. Locate all other temporary signage for optimum visibility as required by law, code, ordinance, or order of the AHJ, as required to caution, alert, warn, reroute or redirect pedestrian and vehicular traffic around or away from areas of the Contractor's operations, and as necessary, to provide a safe and proper job site.
4. Temporary signs must be secured using attachment methods that do not leave permanent marks, disfiguration or discoloration on the surfaces of existing structures or the completed work.

3.02 MAINTENANCE

A. Throughout the duration of the project, the Contractor shall maintain all signs and supports in a neat and clean condition and must patch, repair or replace all surfaces, including sign faces, framing and structural supports that become damaged, marred, scratched, distressed, faded or weathered.

B. Remove, relocate and reinstall all project temporary signs as required by progress of the work.

3.03 REMOVAL

A. Remove all signs, framing, supports and foundations when directed by the AGENCY.

B. Patch, repair, replace and clean all surfaces impacted by the placement and removal of signage.

C. Remove all temporary project signs before Substantial Completion.

END OF SECTION

SECTION 01 60 00
PRODUCT REQUIREMENTS

PART 1 - GENERAL

1.01 SUMMARY

This Section Includes:

A. Administrative and Procedural Requirements for:

1. Selection of Products for Use in the Project
2. Product Delivery, Storage and Handling
3. Manufacturers' Warranties
4. Special Warranties

1.02 REFERENCES

A. Definitions:

1. Products: An item obtained for incorporating into the work, whether purchased for the project or taken from previously purchased stock. Other terms, including “material,” “equipment” and “system” are synonymous with “product”.

   a. Named Products: Items specified by the manufacturer's product name, including make or model number or other designation shown or listed in manufacturer's published product literature current as of date indicated on the Contract Documents.
   b. New Products: Items not previously incorporated into another project or facility. Products salvaged or recycled from another project are not new products.
   c. Comparable Products: Items that are demonstrated as having corresponding qualities related to type, function, dimension, in-service performance, physical properties, appearance and other characteristics to those of specified products and are approved for use through the submittal process.
   d. Basis-of-Design Product: Items for which a specific manufacturer's product is named to establish the salient properties for a given material, fabrication, product, component or accessory, for the purposes of evaluating comparable products of additional manufacturers also named in the specification.

2. Salient Properties: Attributes indicated in the Contract Documents that are critical to the design and integral to the original selection of a specified product, including performance, weight, size, durability, visual effect and similar distinguishing features and requirements.
3. Manufacturer's Warranty: Means a written warranty furnished by an individual manufacturer for a particular product, and specifically endorsed by the manufacturer to the Owner.
4. Special Warranty: Means a written warranty required by the Contract Documents to provide specific rights for the Owner.

1.03 QUALITY ASSURANCE

A. Compatibility of Options: If the specification allows for the option of selecting between (2) two or more products for use on the project, select the product most compatible with the products previously selected, even if previously selected products were also options.

1.04 PRODUCT DELIVERY, STORAGE AND HANDLING

A. Deliver, store and handle products using means and methods that prevent damage, deterioration and loss, including theft and vandalism. Conform to manufacturer prepared published and supplemental instructions.

B. Delivery and Handling:

1. Schedule delivery to minimize long-term storage at the project site and to prevent overcrowding of construction spaces.
2. Coordinate delivery with installation to ensure a minimum amount of holding time for items that are flammable, hazardous, easily damaged or sensitive to deterioration, theft and other losses.
3. Deliver products to the project site in an undamaged condition in manufacturer's original sealed container or other packaging system, complete with labels and instructions for handling, storing, unpacking, protecting and installing.
4. Promptly inspect products upon delivery to determine conformance with the Contract Documents and to determine that products are undamaged and properly protected.

C. Storage:

1. Store products to allow for inspection and measurement of quantity or counting of units.
2. Store materials in a manner that does not endanger the project structure.
3. Store products subject to damage by the elements, under cover, in a weathertight enclosure above ground, with ventilation adequate to prevent condensation.
4. Protect foam plastic from exposure to sunlight, except to the extent necessary for the period during installation and concealment.
5. Conform to manufacturer prepared published and supplemental instructions for temperature, humidity, ventilation and weather protection requirements for storage.
6. Protect stored products from damage and protect liquids from freezing.
   Provide a secure location and enclosure at the project site for storage of materials and equipment by the Owner's construction forces. Coordinate location with the Owner.

D. Conform to manufacturer prepared published and supplemental instructions.

1.05 PRODUCT WARRANTIES

A. Warranties specified in other Sections are in addition to, and run concurrent with, other warranties required by the Contract Documents. Manufacturer's disclaimers and limitations on product warranties do not relieve the Contractor of obligations under the requirements of the Contract Documents.

B. Special Warranties: Prepare a written document that contains appropriate terms and identification, ready for execution.

1. Manufacturer's Standard Form: Modified to include project-specific information and properly executed.
2. Specified Form: When specified forms are included with the Specifications, prepare a written document using indicated form properly executed.
3. See other Sections for specific content requirements and particular requirements for submitting special warranties.

C. Warranty Submittals: As specified in Section 01 78 36.

PART 2 - PRODUCTS

2.01 PRODUCT SELECTION PROCEDURES

A. General Product Requirements: Provide products that conform to the Contract Documents, are undamaged and unless otherwise indicated, are new at the time of installation.

1. Provide products complete with accessories, trim, finish, fasteners and other items needed for a complete installation and indicated use and effect.
2. If available, and unless custom products or non-standard options are specified, provide standard products of types produced and used successfully in similar situations on other projects.
3. The AGENCY may limit selection to products with warranties not in conflict with requirements of the Contract Documents.
4. Descriptive, performance and reference standard requirements in the Specifications establish salient properties of products.
5. Or Equal: For products specified by name and accompanied by the phrase “or equal,” “or approved equal,” or similar terms, conform to the requirements in “Comparable Products” Article below to obtain approval for use of an unnamed product.

B. Product Selection Procedures:

1. Product: Where the Specifications name a single manufacturer and product, provide the named product that conforms to the requirements of the Contract Documents. Comparable products and substitutions for the Contractor's convenience are not permitted.
2. Manufacturer/Source: Where the Specifications name a single manufacturer or source, provide a product by the named manufacturer or source that conforms to the requirements of the Contract Documents. Comparable products or substitutions for the Contractor's convenience are not permitted.
3. Products: Where the Specifications include a list of names of both available manufacturers and products, provide either one of the products listed or an unnamed product that conforms to the requirements of the Contract Documents and the requirements specified in the “Comparable Products” Article below for consideration of an unnamed product.
4. Manufacturers: Where the Specifications include a list of available manufacturers, provide a product manufactured by one of those listed or a product by an unnamed manufacturer that conforms to the requirements of the Contract Documents. Conform to requirements in “Comparable Products” Article below for consideration of an unnamed manufacturer's product.

C. Visual Matching Specification: Where the Specifications require “match the Architect's design reference (target) sample” or similar phrases, provide a product that conforms to the requirements of the Contract Documents and matches the Architect's sample. The AGENCY’s decision is final regarding a proposed product’s match.

1. If no product available within specified category matches and conforms to other specified requirements, comply with the requirements of Section 01 25 00 for proposing a product.

D. Visual Selection Specification: Where the Specifications include the phrase “as selected by the Architect from manufacturer's full range” or similar phrase, select a product that conforms to the requirements of the Contract Documents. The Architect and AGENCY will select color, gloss, pattern, density, or texture from manufacturer's product line that includes both standard and premium items.

2.02 COMPARABLE PRODUCTS

A. The AGENCY considers comparable products only when all the following conditions are satisfied. If the following conditions are not fully satisfied, then the AGENCY will return the incomplete comparable product data without action, except to record nonconformance with these requirements. Each comparable product submittal must include:

1. Evidence that the proposed comparable product does not require revisions to the Contract Documents, that it is consistent with the Contract Documents, that it produces the indicated results, and that it is compatible with all other portions of the work.
2. A detailed comparison of salient properties specified versus the proposed comparable products.
3. Evidence that the proposed comparable products offer warranties equal to or better than those named in the Specifications.
4. Lists of similar installations for completed projects, with project names and addresses including the names and addresses of the architects and owners, when requested.
5. Samples, when requested.

PART 3 - EXECUTION (NOT USED)

END OF SECTION

SECTION 01 64 00
OWNER-FURNISHED PRODUCTS

PART 1 - GENERAL

1.01 SUMMARY

This Section Includes:

A. Administrative and Procedural Requirements for Installing Owner-Furnished or Vendor-Furnished Products, including providing supplementary components and accessories for a complete installation.

1.02 REFERENCES

A. Abbreviations and Acronyms:

1. OFCI: Owner-Furnished Contractor-Installed
2. VFCI: Vendor-Furnished Contractor-Installed

1.03 ADMINISTRATIVE REQUIREMENTS

A. OFCI Items: The Contractor coordinates delivery of the Owner-furnished equipment. The Owner furnishes the equipment to coincide with the contractor’s construction schedule.

1. The Owner

a. Furnishes manufacturer's literature, shop drawings or other appropriate information for the Contractor to prepare required shop drawings.
b. Furnishes the standard integral parts of the equipment.
c. Delivers items to site.

2. The Contractor

a. Verifies mounting and utility requirements for Owner-furnished items.
b. Receives and unloads items at the project site and on a form acceptable to the Owner, gives written receipt for items at the time of delivery, noting visible defects and omissions. If such declaration is not given, the Contractor assumes responsibility for such defects and omissions.
c. Stores items until ready for installation and protects items from loss and damage.
d. Uncrates, assembles and sets items in place.
e. Installs items in conformance with the manufacturer's recommendations, instructions and shop drawings, and under the supervision of the manufacturer's representative, where specified.
f. Supplies all labor and material required for installation and for making mechanical, plumbing, and electrical connections necessary to operate installed items.
g. Provides and installs backings for all items that weigh (20) twenty pounds or more.

B. OFOI and VFVI Items: The Contractor coordinates the delivery of Owner-furnished or vendor-furnished equipment. The Owner or Vendor furnishes the equipment to coincide with the contractor’s construction schedule.

1. The Owner or Vendor

    a. Furnishes manufacturer's literature, shop drawings or other appropriate information for the Contractor to prepare required shop drawings.
    b. Furnishes the standard integral parts of the equipment.
    c. Delivers items to site, unloads, handles and stores items.
    d. Makes connections to roughed-in utilities.

2. The Contractor

    a. Verifies mounting and utility requirements for Owner-furnished items.
    b. Receives items at the project site and on a form acceptable to the Owner, gives written receipt for items at the time of delivery, noting visible defects and omissions.
    c. Provides rough-ins of utility items in conformance with the manufacturer's recommendations, instructions and shop drawings, and under the supervision of the manufacturer's representative, where specified.
    d. Provides and installs backings for all items that weigh (20) twenty pounds or more.

C. Existing Item Relocation:

1. Where indicated, existing equipment shown as remaining and relocated is reinstalled by the Contractor who shall:

    a. Remove items from their original location
    b. Recap and label existing utilities in their original location
    c. Store items until ready for installation and protect items from loss and damage
    d. Verify mounting and utility requirements for relocated items
    e. Relocate items to their new locations
    f. Install items, supply all labor and material required for (1) reinstallation and (2) make new mechanical, plumbing, data and electrical connections
    g. Patch or repair existing surfaces to match adjacent areas where existing items are removed
    h. Provide and install backings for all items that weigh (20) twenty pounds or more

D. Existing Item Removal:

1. Where indicated, the Contractor shall:

    a. Remove items from their original location
    b. Recap and label existing utilities in their original location
    c. Remove and dispose of existing items from the project site, unless indicated as being turned over to the Owner
    d. Patch or repair existing surfaces to match adjacent areas where existing items are removed.

E. Provisions for Future Items:

1. Where indicated, the Contractor shall:

    a. Provide rough-ins of utility items in conformance with the manufacturer's recommendations, instructions and shop drawings, and under the supervision of the manufacturer's representative, where specified.
    b. Cap and label utilities for future connections.

1.04 PRODUCT HANDLING

A. Protection: Use necessary means to protect the materials of this Section before, during and after installation; and to protect the installed work and materials of other trades and equipment installed by others.

B. Replacements: In the event of damage, promptly repair all damaged and defective work to the satisfaction of the Owner, at no change in Contract Time and Contract Sum.

PART 2 - PRODUCTS

2.01 OWNER-FURNISHED AND VENDOR-FURNISHED ITEMS

A. Items must conform to the space limitations indicated on the Drawings and to the mechanical and electrical services indicated and specified in other Sections.

1. The Contractor

a. Assembles all necessary information about the Owner-furnished or Vendor-furnished items.
b. Coordinates rough-in locations, sizes and capacities, backings, anchorage and utility services required for installation of the work.
c. Notifies the Architect and the Owner of any discrepancies, conflicts or omissions discovered.

2. Contractor coordination must be performed in a timely manner to avoid delaying the installation of facility services, concealed supports and backings during the scheduled installation of that work.

B. If the Owner substitutes an item similar to that which is indicated or scheduled, there is no change in rough-in cost unless (1) Substitution occurs after rough-in is completed or if rough-in involves other mounting requirements, or (2) If different capacity utilities are required other than those required by the originally specified item.

C. Modify installed work as necessary to meet the space limitations, backing, anchorage or facility service requirements at no additional cost to the Owner.

PART 3 - EXECUTION

3.01 EXAMINATION

A. Before beginning installation, verify that work performed as part of the work of other Sections (1) Conforms to the manufacturer’s installation or application tolerance requirements (2) Provides true, flat and level surfaces, and (3) Satisfies all other conditions relating to the quality of installation, durability, appearance and performance.

B. Evaluation and Assessment: Reject work that does not conform to the manufacturer’s installation or application requirements. The Contractor shall either perform or arrange for and pay all costs for remedial work necessary to correct deficient conditions to bring them into conformance with the manufacturer’s installation or application requirements.

C. Discrepancies:

1. In the event of any discrepancy between the Owner-furnished or Vendor-furnished items and the indicated utilities, space limitations or conflicts with other features of work, promptly notify the Architect for resolution.
2. Do not proceed with installation until all discrepancies are resolved.

3.02 INSTALLATION

A. Where indicated, relocate and reinstall existing equipment in conformance with the approved shop drawings and the original manufacturer's instructions.

B. Install Owner-furnished equipment in conformance with the approved shop drawings and manufacturer prepared published instructions.

3.03 ADJUSTING AND CLEANING

A. Adjust equipment as directed and required.

B. Clean all new and relocated equipment.

C. Protect equipment from damage until final acceptance of the work.

END OF SECTION

SECTION 01 73 00
EXECUTION

PART 1 - GENERAL

1.01 SUMMARY

This Section Includes:

A. Administrative and Procedural Requirements for Execution of the Work, including:

1. Installation of the Work
2. Coordination of AGENCY-Installed Products
3. Progress Cleaning
4. Starting and Adjusting
5. Protection of Installed Construction
6. Correction of the Work

B. Related Requirements:

1. Section 01 73 29 for Cutting and Patching

1.02 SUBMITTALS

A. Landfill Receipts: For hazardous waste disposal, submit for information copies of receipts issued by a landfill facility licensed to accept hazardous materials.

2.01 MATERIALS

A. General: Comply with requirements specified in other Sections.

3.01 EXAMINATION

A. Existing Conditions: The existence and location of underground and other utilities and construction indicated as existing are not guaranteed. Before beginning sitework, investigate and verify the mechanical and electrical systems and other construction affecting or impacted by the work.

B. Examination and Acceptance of Conditions: Before proceeding with each component of the work, examine substrates, areas and conditions, where indicated, with the installer present. Verify conformance to the Contract Documents for installation tolerances and other conditions affecting performance. Record observations.

1. Examine rough-in for mechanical and electrical systems to verify actual locations of connections before beginning equipment and fixture installation.
2. Examine walls, floors and roofs for suitable conditions where products and systems are installed.
3. Verify compatibility with and suitability of substrates, including compatibility with existing finishes or primers.

C. Written Report: Where a written report listing conditions detrimental to the performance of the work is required by other Sections, include the following:

1. Description of the Work
2. List of detrimental conditions, including substrates
3. List of unacceptable installation tolerances
4. Recommendations for corrections

D. Proceed with installation only after unsatisfactory conditions are corrected. Proceeding with installation stipulates acceptance of existing conditions. After beginning work, the Contractor performs all remedial work necessary to correct deficient conditions to bring them into conformance with the Contract Documents.

3.02 PREPARATION

A. Existing Utility Information: Furnish information to the local utility and the Owner when necessary to adjust, move or relocate existing utility structures, utility poles, lines, services or other utility appurtenances located in or affected by the work. Coordinate with the AHJ.

B. Field Measurements: Take field measurements as required to properly fit the work. Verify field measurements before installing each product. Where portions of the work are indicated to fit to other construction, verify dimensions of the other construction by field measurements before fabrication. Coordinate fabrication schedules with construction progress to avoid delaying the work.

C. Space Requirements: Verify space requirements and dimensions of items shown diagrammatically on Drawings.

D. Review of Contract Documents and Field Conditions: Promptly upon discovery of a need for clarification or interpretation of the Contract Documents caused by differing field conditions outside the control of the Contractor, submit a Request for Information to the AGENCY in conformance with Section 01 26 13.

3.03 INSTALLATION

A. General: Accurately locate the work and components of the work, in correct alignment and elevation, as indicated.

1. Make vertical work plumb and make horizontal work level.
2. Where space is limited, install components to maximize space available for maintenance and ease of removal for replacement.
3. Conceal pipes, ducts and wiring in finished areas unless otherwise indicated.
4. Maintain minimum headroom clearance of 96-inches in spaces without a suspended ceiling.

B. Comply with manufacturer-prepared published and supplemental instructions and recommendations for installing products.

1. Install products at the time and under conditions that will ensure the best possible results.
2. Maintain conditions required for product performance until Substantial Completion.

C. Conduct construction operations so that no part of the work is subjected to damaging operations or loading in excess of that expected during normal conditions of occupancy.

D. Sequence the work and allow adequate clearances to accommodate movement of construction items on site and placement in permanent locations.

E. Do not use tools or equipment that produce harmful noise levels.

F. Obtain and distribute templates for work specified as factory-prepared and field-installed. Check the approved shop drawings of other work to confirm that adequate provisions are made for locating and installing products in conformance with the Contract Documents.

G. Provide blocking, attachment plates, anchors and fasteners of sufficient size and quantity to securely anchor each component in place to supporting construction, accurately located and aligned with other portions of the work. Where the size and type of attachments are not indicated, verify the size and type required for load conditions.

1. Where mounting heights are not indicated, mount components at heights directed by the Architect.
2. Allow for building movement, including thermal expansion and contraction.
3. Coordinate installation of anchorages. Furnish setting drawings, templates and directions for installing anchorages, including sleeves, concrete inserts, anchor bolts and items with integral anchors that are embedded in concrete or masonry. Deliver such items to the project site in time for installation.

H. Make joints of uniform width. Where joint locations in exposed work are not indicated, arrange joints for the best visual effect. Fit exposed connections together to form hairline joints.

I. Use products, cleaners and installation materials that are not considered hazardous.

3.04 OWNER FURNISHED PRODUCTS

A. Owner Furnished Owner Installed (OFOI)

1. Site Access - Provide access and support pursuant to VCSS Section 4-1.1.1 (not including installation, which shall be performed by AGENCY.)
2. Coordination - Provide cooperation and coordination in accordance with VCSS Section 7-7.

B. Owner Furnished Contractor Installed (OFCI)

1. Site Access - Provide access and support pursuant to VCSS Section 4-1.1.1.
2. Coordination - Provide cooperation and coordination in accordance with VCSS Section 7-7.

3.05 PROCESS CLEANING

A. General: Clean Project site and work areas daily, including common areas. Coordinate progress cleaning for joint-use areas where more than one installer has worked. Enforce requirements strictly. Dispose of materials lawfully.

1. Comply with requirements in NFPA 241 for removal of combustible waste materials and debris.
2. Do not hold materials more than (7) seven days during normal weather or more than (3) three days if the temperature is expected to rise above 80 deg F.

3. Containerize hazardous and unsanitary waste materials separately from other waste. Mark containers appropriately and dispose of legally, according to regulations.

B. Site: Maintain Project site free of waste materials and debris. Dispose of waste to a legal disposal facility.

C. Work Areas: Clean areas where work is in progress to the level of cleanliness necessary for proper execution of the Work.

1. Remove liquid spills promptly.
2. Where dust would impair proper execution of the Work, broom-clean or vacuum the entire work area, as appropriate.

D. Installed Work: Keep installed work clean. Clean installed surfaces according to written instructions of manufacturer or fabricator of product installed, using only cleaning materials specifically recommended. If specific cleaning materials are not recommended, use cleaning materials that are not hazardous to health or property and that will not damage exposed surfaces.

E. Concealed Spaces: Remove debris from concealed spaces before enclosing the space.

F. Exposed Surfaces in Finished Areas: Clean exposed surfaces and protect as necessary to ensure freedom from damage and deterioration at time of Substantial Completion.

G. Waste Disposal: Burying or burning waste materials onsite is not permitted. Washing waste materials down sewers or into waterways is not permitted. Comply with waste disposal requirements in Division 01 Section “Construction Waste Management and Disposal”.

H. During handling and installation, clean and protect construction in progress and adjoining materials already in place. Apply protective covering where required to ensure protection from damage or deterioration at Substantial Completion.

I. Clean and provide maintenance on completed construction as frequently and as necessary throughout the remainder of the construction period. Adjust and lubricate operable components to ensure operability without damaging effects.

J. Limiting Exposures: Supervise construction operations to assure that no part of the construction, completed or in progress, is subject to harmful, dangerous, damaging or otherwise deleterious exposure during the construction period.

3.06 STARTING AND ADJUSTING

A. Coordinate startup and adjusting of equipment and operating components per specification section.

1. Start equipment and operating components to confirm proper operation. Remove malfunctioning units, replace with new units and retest.
2. Adjust equipment for proper operation. Adjust operating components for proper operation without binding.
3. Test each piece of equipment to verify proper operation. Test and adjust controls and safeties. Replace damaged and malfunctioning controls and equipment.

B. Manufacturer's Service: Comply with qualification requirements in Section 01 43 00.

3.07 PROTECTION OF INSTALLED CONSTRUCTION

A. Provide final protection and maintain conditions that ensure installed work is without damage or deterioration at time of Substantial Completion.

B. Comply with manufacturer-prepared published and supplementary instructions for temperature and relative humidity.

3.08 CORRECTION OF THE WORK

A. Repair or remove and replace defective construction. Restore damaged substrates and finishes. Comply with requirements in Division 01 Section "Cutting and Patching".
   1. Repairing includes replacing defective parts, refinishing damaged surfaces, touching up with matching materials, and properly adjusting operating equipment.

B. Restore permanent facilities used during construction to their specified condition.

C. Remove and replace damaged surfaces that are exposed to view if surfaces cannot be repaired without visible evidence of repair.

D. Repair components that do not operate properly. Remove and replace operating components that cannot be repaired.

E. Remove and replace chipped, scratched and broken glass or reflective surfaces.

END OF SECTION

SECTION 01 73 29
CUTTING AND PATCHING

PART 1 - GENERAL

1.01 SUMMARY

This Section Includes:

A. Administrative and Procedural Requirements for cutting into existing construction to provide for installation of other components or for the performance of other construction, and for subsequently patching as required to restore surfaces to their original condition.

B. Procedural Requirements for cutting and patching of pavement for utility tie-ins through existing street improvements.

1.02 REFERENCES

A. Drawings and General Provisions of the Contract, including Ventura County Standard Specifications (VCSS), General and Supplementary Conditions and other Division 01 Specification Sections, apply to this section.

B. Definitions:

1. Cutting: The removal of existing construction as necessary to permit the installation or performance of other work.
2. Patching: Fitting and repair work required to restore cut or otherwise damaged surfaces to original conditions after the installation of other work.

    a. Cutting and patching is performed for coordination of the work, to uncover work for access or inspection, to obtain samples for testing, to permit alterations and for similar purposes.

1.03 ADMINISTRATIVE REQUIREMENTS

A. Furnish all labor, materials, tools, equipment and services for all cutting and patching as indicated in accordance with provisions of Contract Documents.

B. Completely coordinate work with other Contract work.

C. Cutting and Patching: Comply with the requirements for and the limitations on cutting and patching of construction elements.

1. Structural Elements: When cutting and patching structural elements, notify the Architect of locations and details of cutting and await direction from the Architect before proceeding. Shore, brace and support structural elements during cutting and patching. Do not cut and patch structural elements in a manner that will alter load-carrying capacity or increase deflection.
2. Operational Elements: Do not cut and patch operating elements and related components in a manner that results in reducing their capacity to perform as intended or that results in increased maintenance or decreased operational life or safety. Operational elements include the following:

a. Primary Operational Systems and Equipment
b. Fire Separation Assemblies, including Fire Resistive Construction and any means of egress component
c. Firestopping Assemblies
d. Air or Smoke Barriers
e. Fire-Suppression Systems
f. Mechanical Systems Piping and Ducts
g. Control Systems
h. Communication Systems
i. Fire Detection and Fire Alarm Systems
j. Conveying Systems
k. Electrical Wiring Systems
l. Operating Systems of Special Construction

3. Other Construction Elements: Do not cut and patch other construction elements or components in a manner that will alter load-carrying capacity which results in reducing their capacity to perform as intended or results in increased maintenance or decreased operational life or safety. Other construction elements include the following:

a. Water, Moisture or Vapor Barriers
b. Thermal Insulation
c. Roofing and Waterproofing Membranes and Flashings
d. Exterior Curtain-Wall Construction
e. Sprayed Fire Resistive Material
f. Firestopping Assemblies
g. Expansion Joint Assemblies
h. Equipment Supports
i. Piping, Ductwork, Vessels and Equipment
j. Noise Reduction and Vibration Control Elements and Systems

4. Visual Elements: Do not cut and patch construction in a manner that results in visual evidence of cutting and patching.

a. Do not cut and patch exposed construction in a manner that reduces the building's aesthetic qualities, as determined by the AGENCY.
b. Remove and replace construction that is cut or patched in a manner that reduces the building's aesthetic qualities.

D. Cutting and Patching Conference: Prior to any cutting or patching, meet at the project site with all parties involved in cutting and patching, including mechanical and electrical trades. Review areas of potential interference and conflict. Coordinate procedures and resolve potential conflicts before proceeding with work.

E. Manufacturer's Installation Instructions: Obtain and maintain onsite, the manufacturer-prepared published installation and supplemental instructions for each item or piece of equipment installed.

1.04 SUBMITTALS

A. Cutting and Patching Plan: Submit a plan detailing proposed cutting and patching procedures at least (10) ten business days prior to the work being performed. Include the following:

1. Extent: Describe the reason for and extent of each cutting and patching occurrence.

2. Changes to *In Situ* Construction: Describe all anticipated results. Include proposed changes to structural elements and operating components, as well as changes in building appearance and other significant visual elements.
3. Products: Furnish a list of products proposed for patching and the companies and personnel proposed for performing patching work.
4. Dates: Indicate when cutting and patching is scheduled.
5. Utilities and Mechanical and Electrical Systems: List facility services and systems that cutting and patching procedures might either disturb or affect.

    a. Provide a list of services and systems that must be relocated along with those that might be temporarily out of service.
    b. Indicate proposed lengths of time permanent services and systems might be disrupted.
    c. Describe proposed provisions for temporary services and systems during interruption of permanent services and systems.

B. Do not begin cutting or patching work until after the Architect's review of the cutting and patching plan is complete; the Architect may have comments that lead to minor changes in the work.

1.05 WARRANTY

A. Remove, replace, patch and repair materials and surfaces that are cut or damaged during cutting and patching operations, using methods and materials that will not lead to or result in any warranties becoming void.

PART 2 - PRODUCTS

2.01 MATERIALS

A. Use materials for patching that are identical to *in situ* materials. For exposed surfaces, use materials that visually match *in situ* adjacent surfaces, as determined by the AGENCY.

B. If identical materials are unavailable or cannot be used, then furnish materials that, when installed, provide a visual and performance match acceptable to the AGENCY for the visual and functional performance of *in situ* materials.

PART 3 - EXECUTION

3.01 JOB CONDITIONS

A. Perform preliminary investigations as required to ascertain extent of work.

B. Prior to any start of cutting ad patching work, obtain and pay for all permits required by AHJ relative to specific cutting operations.

C. Obtain approval of AHJ for work that affects exitways, means of egress or access to, or exit from any area of work.

3.02 CUTTING AND PATCHING

A. General: Employ skilled workers to perform cutting and patching. Promptly proceed with cutting and patching and complete cutting and patching operations without delay.

1. Cut *in situ* construction to provide for installation of other components or performance of other construction and subsequently patch as required to restore surfaces to their original condition.

B. Temporary Support: Provide temporary support of work to be cut.

C. Protection: Protect *in situ* construction during cutting and patching to prevent damage. Provide protection from adverse weather conditions for portions of the project that might be exposed during cutting and patching operations.

D. Adjoining Areas: Avoid interference with use of adjoining areas or interruption of free passage to adjoining areas.

E. Cutting: Cut *in situ* construction by sawing, drilling, breaking, chipping, grinding and similar operations, including excavation, using methods least likely to damage elements retained or adjoining construction. Where practicable, review proposed procedures with the original installer and comply with original installer's written recommendations.

1. General: Use hand or small power tools designed for sawing and grinding, in lieu of those designed for hammering and chopping. Neatly cut holes and slots to minimum sizes required and with minimum disturbance of adjacent surfaces. Temporarily cover cut openings when not in use.
2. Finished Surfaces: Cut or drill from the exposed or finished side into concealed surfaces.
3. Concrete and Masonry: Cut using a cutting machine, such as an abrasive saw or a diamond-core drill.
4. Concrete and Asphalt Pavement: Cut using a cutting machine, such as an abrasive saw where cutting passes through concrete sidewalk paving, remove concrete from joint to joint.
5. Excavating and Backfilling: Comply with requirements in applicable Sections where required by cutting and patching operations.
6. Mechanical and Electrical Services: Cut off pipe or conduit in walls or partitions indicated as being removed. Cap, valve or plug and seal remaining portions of pipe or conduit to prevent the intrusion of moisture or other foreign matter after cutting.
7. Proceed with patching after construction operations requiring cutting are complete.

F. Patching: Patch construction by filling, repairing, refinishing, enclosing, and similar operations following performance of other work. Patch with unnoticeable and durable seams, as determined by the Architect, whose decision is final. Provide materials and comply with installation requirements specified in other Sections, where applicable.

1. Inspection: Where feasible, test and inspect patched areas after completion to demonstrate the physical integrity of installation.
2. Exposed Finishes: Restore exposed finishes of patched areas and extend finish restoration into retained adjoining construction in a manner that minimizes evidence of patching and refinishing.

   a. Clean piping, conduit, and similar features before applying paint or other finishing materials.
   b. Restore damaged pipe covering to its original condition.

3. Floors and Walls: Where walls or partitions are removed and that extend one finished area into another, patch and repair floor and wall surfaces in the new area. Provide an even surface of uniform finish, color, texture and appearance, as determined by the Architect, whose decision is final. Remove *in situ* floor and wall coverings, and replace with new materials, if necessary, to achieve a uniform color and appearance.

    a. Where patching occurs on a painted surface, prepare substrates and apply primer and intermediate paint coats appropriate for each substrate over the patch and then apply at least a final paint coat over the entire unbroken surface containing the patch. Provide additional coats until patching blends with the adjacent surfaces.

4. Ceilings: Patch, repair or rehang *in situ* ceilings as necessary to provide an even plane surface of uniform appearance.
5. Exterior Building Enclosure: Patch components in a manner that restores enclosure assemblies to a weathertight condition and ensures thermal and moisture integrity of the enclosure assembly.
6. Where patches at asphalt occur, overlay asphalt at a minimum of (1) one foot past the trench opening. Slurry coat the trench area to match existing adjacent pavement.

3.03 CLEANING

A. Upon completing installation, clean areas and spaces where cutting and patching are performed.

    1. Clean all surfaces to remove dust and other foreign materials.
    2. Remove paint, mortar, oils, putty and similar materials from adjacent finished surfaces.
    3. Clean piping, conduit and similar components prior to painting or other finishing is applied.

B. Restore damaged areas to a condition matching adjacent areas, as determined by the Architect, whose decision is final.

C. Remove and replace materials and components that are damaged, loose, chipped, broken, have been stained, corroded, that do not match adjacent surfaces, or cannot be satisfactorily cleaned or repaired, as determined and directed by the Architect, whose decision is final.

END OF SECTION

SECTION 01 74 00
CLEANING

PART 1 - GENERAL

1.01 SUMMARY

This Section Includes:

A. Administrative and Procedural Requirements for Cleaning.

1.02 ADMINISTRATIVE REQUIREMENTS

A. Furnish all labor, materials, tools, equipment, and services for all cleaning as indicated in accordance with provisions of Contract Documents.

B. Contractor shall coordinate with all other Contract work.

C. Contractor shall maintain the jobsite, the AGENCY's premises, adjacent properties, public areas and all areas of the Contractor's operations free from accumulations of waste, dust, debris and rubbish generated during the execution of the work or resulting from the Contractor's operations.

D. At completion of work, the Contractor shall remove all waste materials, rubbish, tools, equipment, machinery and surplus materials from the project site and other areas of the Contractor's operations and clean all surfaces for final inspection and acceptance of Substantial Completion by the AGENCY.

PART 2 - PRODUCTS

2.01 MATERIALS

A. Cleaning Agents: Use cleaning materials and agents recommended by manufacturer or fabricator of the surface to be cleaned. Do not use cleaning agents that are potentially hazardous to health or property, or that might damage finished surfaces.

1. Use cleaning materials recommended by the manufacturer of product whose surface is cleaned.
2. Use cleaning materials on surfaces recommended by the cleaning material manufacturer.
3. Use cleaning products that comply with the California Code of Regulations maximum allowable VOC levels.

PART 3 - EXECUTION

3.01 GENERAL

A. Legally conduct cleaning and disposal operations.

1. Do not burn or bury anything anywhere on project site, areas of the Contractor's operations, adjacent properties, public areas, or the AGENCY's premises.
2. Do not dispose of toxic or volatile waste materials, including mineral spirits, paint thinner, oils, and petroleum-based products in the storm sewer or sanitary drain systems.

B. Legally store and dispose of hazards materials.

1. Store volatile waste materials in clearly and appropriately marked and covered containers fabricated specifically for the purpose of storing such material.
2. Remove waste promptly to prevent accumulation of wastes that create hazardous conditions. Containers must be removed daily from the job site and other areas of the Contractor's operations.
3. Provide adequate ventilation during storage and use of volatile or noxious substances.

    a. The building's permanent ventilation system may not be used for ventilation of volatile or noxious substances.
    b. Care must be taken to shield volatile or noxious exhaust discharge from mechanical system air intakes.

3.02 PROGRESS CLEANING

A. General: Clean the project site and work areas daily, including common areas. Lawfully dispose of materials.

1. Comply with requirements in NFPA 241 for removal of combustible waste materials and debris.
2. Do not hold waste materials more than (7) seven calendar days during normal weather or more than (3) three calendar days if the temperature is expected to rise above 90 deg F.
3. Containerize hazardous and unsanitary waste materials separately from other waste. Mark containers appropriately and dispose of legally, according to regulations.

    a. Use containers specifically fabricated to hold waste materials of type to be stored.

4. Coordinate progress cleaning for joint use areas where the Contractor and other contractors are working concurrently.
5. Leave the Work "broom clean".

B. Site: Maintain the project site free of waste materials and debris.

C. Work Areas: Clean areas where work is in progress to the level of cleanliness necessary for proper execution of the work.

1. Remove liquid spills promptly.
2. Where dust would impair proper execution of the work, broom-clean or vacuum the entire work area, as appropriate.

D. Installed Work: Keep installed work clean. Clean installed surfaces in conformance with the manufacturer prepared published instructions for the product installed, using only specifically recommended cleaning materials. If specific cleaning materials are not recommended, use cleaning materials that are not hazardous to health or property and that will not damage exposed surfaces.

E. Concealed Spaces: Remove debris from concealed spaces before enclosing the space.

F. Exposed Surfaces in Finished Areas: Clean exposed surfaces and protect as necessary to ensure freedom from damage and deterioration at time of Substantial Completion.

G. Waste Disposal: Do not bury or burn waste materials onsite. Do not wash waste materials down sewers or into waterways. Comply with waste disposal requirements in Section 01 74 19.

H. During handling and installation, clean and protect construction in progress and adjoining materials already in place. Apply protective covering where required to ensure protection from damage or deterioration at Substantial Completion.

I. Clean and provide maintenance on completed construction as frequently as necessary through the remainder of the construction period. Adjust and lubricate operable components to ensure operability without damaging effects.

J. Limiting Exposures: Supervise construction operations to assure that no part of the construction, completed or in progress, is subject to harmful, dangerous, damaging, or otherwise deleterious exposure during the construction period.

3.03 FINAL CLEANING

A. General: Perform final cleaning. Lawfully conduct cleaning and waste-removal operations in conformance with local laws and ordinances and federal and local environmental and antipollution regulations.

B. Cleaning: Employ experienced workers or professional cleaners for final cleaning. Clean each surface or unit to condition expected in an average commercial building cleaning and maintenance program. Comply with manufacturer's written instructions.

1. Complete the following cleaning operations before requesting inspection for certification of Substantial Completion for the entire project or for a designated portion of the project:

    a. Clean the project site, yard and grounds, in areas disturbed by construction activities, including landscape development areas, of rubbish, waste material, litter and other foreign substances.
    b. Sweep paved areas broom clean. Remove petrochemical spills, stains and other foreign deposits.
    c. Rake grounds that are neither planted nor paved to a smooth, even textured surface.
    d. Remove tools, construction equipment, machinery and surplus material from the project site.
    e. Remove all slip hazards to provide safe access to the building.
    f. Clean exposed exterior and interior hard-surfaced finishes to a dirt-free condition, free of stains, films and similar foreign substances. Avoid disturbing natural weathering of exterior surfaces. Restore reflective surfaces to their original condition.
    g. Remove debris and surface dust from limited access spaces, including roofs, plenums, shafts, trenches, equipment vaults, manholes, attics and similar spaces.
    h. Sweep concrete floors broom clean in unoccupied spaces.
    i. Vacuum carpet and similar soft surfaces, removing debris and excess nap; clean according to manufacturer's recommendations if visible soil or stains remain.
    j. Clean transparent materials, including mirrors and glass in doors and windows. Remove glazing compounds and other noticeable, vision obscuring materials. Polish mirrors and glass, taking care not to scratch surfaces.
    k. Remove labels that are not permanent.

l. Wipe surfaces of mechanical and electrical equipment, elevator equipment and similar equipment. Remove excess lubrication, paint and mortar droppings, and other foreign substances.
m. Clean plumbing fixtures to a sanitary condition, free of stains, including stains resulting from water exposure.
n. Replace disposable air filters and clean permanent air filters. Clean exposed surfaces of diffusers, registers and grills.
o. Clean ducts, blowers and coils if units were operated without filters during construction or that display contamination with particulate matter on inspection.
p. Clean light fixtures, lamps, globes and reflectors to function with full efficiency.
q. Leave the project clean and ready for occupancy.

END OF SECTION

SECTION 01 77 00
CLOSEOUT PROCEDURES

PART 1 - GENERAL

1.01 RELATED DOCUMENTS

A. Drawing and general provisions of the Contract, including Ventura County Standard Specifications (VCSS), General and Supplementary Conditions and other Division 01 Specifications, apply to this Section.

1.02 SUMMARY

This Section Includes:

A. Administrative and Procedural Requirements for Contract Closeout, including but not limited to, the following:

1. Substantial Completion Procedures
2. Final Completion Procedures
3. Warranties
4. Final Cleaning
5. Repair of the Work

B. Related Requirements:

1. Section 01 74 00 for Final Cleaning Requirements
2. Section 01 78 36 for Warranty and Bond Requirements
3. Section 01 31 23 for Web Based Construction Management

1.03 SUBMITTALS

A. Informational Submittals:

1. Contractor's List of Incomplete Items: Initial Submittal at Substantial Completion
2. Certified List of Incomplete Items: Final Submittal at Final Completion

B. Closeout Submittals:
1. Field Report: For Pest Control Inspection

1.04 MAINTENANCE MATERIAL SUBMITTALS

A. Schedule of Maintenance Material Items: For maintenance material submittal items specified in other Sections.

1.05 SUBSTANTIAL COMPLETION PROCEDURES

A. Contractor's List of Incomplete Items: Prepare and submit a list of items that must be completed and corrected (Contractor's Punchlist), indicating both the value of each item on the list and the reasons the work is incomplete.

B. Submittals before Substantial Completion: Complete the following at least (10) ten business days before requesting inspection for determining date of Substantial Completion. List items below that are incomplete at time of request.

1. Obtain and submit releases from the AHJ permitting the Owner unrestricted use of the work and access to services and utilities. Include occupancy permits, operating certificates and similar releases.
2. Submit closeout submittals specified in other Division 01 Sections, including project record documents, operation and maintenance manuals, final completion construction photographic documentation, damage or settlement surveys, property surveys and similar final record information.
3. Submit closeout submittals specified in individual Sections, including specific warranties, workmanship bonds, maintenance service agreements, final certifications and similar documents.
4. Submit maintenance material submittals specified in individual Sections, including tools, spare parts, extra materials and similar items, and deliver to location designated by the Architect. Label with manufacturer's name and model number where applicable.

    a. Schedule of Maintenance Material Items: Prepare and submit schedule of maintenance material submittal items, including name and quantity of each item and name and number of related Specification Section. Obtain the Architect’s signature for receipt of submittals.

5. Submit Test/Adjust/Balance Records.
6. Submit changeover information related to the Owner's occupancy, use, operation and maintenance.

C. Procedures before Substantial Completion: Complete the following at least (20) twenty business days before requesting inspection for determining date of Substantial Completion. List items below that are incomplete at time of request.

1. Advise the Owner of pending insurance changeover requirements.
2. Make final changeover of permanent locks and deliver keys to the Owner. Advise the Owner's personnel of changeover in security provisions.
3. Complete startup and testing of systems and equipment.
4. Perform preventive maintenance on equipment used before Substantial Completion.
5. Instruct the Owner's personnel in operation, adjustment, and maintenance of products, equipment, and systems. Submit demonstration and training video recordings specified in Section 01 79 00.
6. Advise the Owner of utilities changeover.
7. Participate with the Owner in conducting inspection and walkthrough with local emergency responders.
8. Terminate and remove temporary facilities from the project site, along with mockups, construction tools and similar elements.
9. Complete final cleaning requirements, including touchup painting.
10. Touch-up and otherwise repair and restore marred exposed finishes to eliminate visual defects.

D. Inspection: Submit a written request for inspection to determine Substantial Completion at least (20) twenty business days before date the work is completed and ready for final inspection and tests.

1. On receipt of request, the AGENCY either proceeds with inspection or notifies the Contractor of unfulfilled requirements.

2. The AGENCY prepares the Certificate of Substantial Completion after inspection or will notify the Contractor of items, either on the Contractor's list or additional items identified by the AGENCY that must be completed or corrected before a certificate is issued.
3. Re-Inspection: Request re-inspection when the work identified in previous inspections as incomplete, is completed or corrected.
4. Results of the completed inspection form the basis of requirements for final completion.

1.06 FINAL COMPLETION PROCEDURES

A. Inspection: Submit a written request for final inspection to determine acceptance at least (10) ten business days before date the work is completed and ready for final inspection and testing. Upon receipt of request, the AGENCY either proceeds with inspection or notifies the Contractor of unfulfilled requirements. The AGENCY either prepares a final Certificate for Payment after inspection or notifies the Contractor of construction that must be completed or corrected before a certificate is issued.

   1. Re-inspection: Request re-inspection when the work identified in previous inspections as incomplete, is completed or corrected.

B. When the project is completed, there are several steps that the Contractor and the AGENCY staff must take. Action by both is necessary for the Contractor to receive final payment promptly. The following are the steps required:

   1. Contractor shall inform the Project Manager that he expects to be ready for final inspection on a certain day for Project Manager to schedule a final inspection.
   2. When the work is completed, Contractor writes a letter to the Project Manager stating that "The Work is Complete". This is required by VCSS §6-8 as a precedent to the Project Manager making the final inspection.
   3. The Project Manager, usually accompanied by other members of the Agency's staff and the Contractor, performs an inspection of the project as a whole and notes exceptions ("punchlist") on the final inspection report form. A copy of the report will be given to the Contractor in the field. This is not acceptance of the project.
   4. The next action depends on what is included in the exceptions ("punchlist"). If the exceptions are only minor cleanup and minor corrections and are promptly completed, the Project Manager will recommend to the Deputy Director that "field completion" has occurred on the date indicated. If this is not the case, the procedure must start over at Item 1 above.
   5. The Deputy Director of Public Works will review the final inspection report and, if satisfied, will confirm "Field Completion" on the date noted on the Final Inspection Report or as modified. Please Note: When "Field Completion" is certified, the contract time will stop, (liquidated damages, if applicable, will stop accruing), and the Contractor will be relieved of the duty to protect the Work.
   6. After field completion, the semi-final pay estimate and the Release on Contract will be prepared and sent to the Contractor. When the Release has been signed, notarized and returned, and all other work noted on the lower part of the Final Inspection Report completed, the Deputy Director will recommend filing a Notice of Completion.
   7. The Director reviews the recommendation, and upon concurrence that the project is complete, signs the Notice of Completion and directs that it be recorded. The Director's signature on the Notice of Completion is the acceptance of the Work as provided in VCSS §6-8. The acceptance will indicate the date on which work was completed.
   8. The date of recording the Notice of Completion starts the (35) thirty-five day period specified in VCSS §9-3.1.
   9. Final payment will be processed after the (35) thirty-five day waiting period has elapsed. Actual payment is usually made within (10) days after processing starts.

1.07 LIST OF INCOMPLETE ITEMS (PUNCHLIST)

A. The Punchlist will be managed with the web-based construction management software; see 01 31 23.

B. List Organization: Include the names and identification of each space and area affected by construction operations for incomplete items and items needing correction including, if necessary, areas disturbed by the Contractor that are outside the limits of construction. Use web-based management program to export the list of incomplete items.

1. Organize list of spaces in sequential order, starting with exterior areas first and proceeding from lowest floor to highest floor.
2. Organize items applying to each space by major element, including categories for ceiling, individual walls, floors, equipment, and building systems.

PART 2 - PRODUCTS (NOT USED)

PART 3 - EXECUTION

3.01 CORRECTION AND REPAIR

A. Complete repair and restoration operations before requesting inspection for determination of Substantial Completion.

B. Repair or remove and replace defective construction. Repairing includes replacing defective parts, refinishing damaged surfaces, touching up with matching materials and properly adjusting operating equipment.

C. Where damaged or worn items cannot be repaired or restored, provide replacements.

D. Remove and replace operating components that cannot be repaired. Restore damaged construction and permanent facilities used during construction to specified condition.

1. Remove and replace chipped, scratched and broken glass, reflective surfaces and other damaged transparent materials.
2. Touch up and otherwise repair and restore marred or exposed finishes and surfaces. Replace finishes and surfaces that that already show evidence of repair or restoration.

a. Do not paint over “UL” and other required labels and identification, including mechanical and electrical nameplates. Remove paint applied to required labels and identification.

3. Replace parts subject to operating conditions during construction that may impede operation or reduce longevity.
4. Replace burned-out bulbs, bulbs noticeably dimmed by hours of use, and defective and noisy starters in fluorescent and mercury vapor fixtures to comply with requirements for new fixtures.

END OF SECTION

SECTION 01 78 23
OPERATION AND MAINTENANCE DATA

PART 1 - GENERAL

1.01 SUMMARY

This Section Includes:

A. Administrative and Procedural Requirements for Preparing Operation and Maintenance Manuals, including:

1. An Operation and Maintenance Documentation Directory
2. Emergency Manuals
3. Operation Manuals for Systems, Subsystems and Equipment
4. Product Maintenance Manuals
5. Systems and Equipment Maintenance Manuals

1.02 ADMINISTRATIVE REQUIREMENTS

A. Manual Content: Operation and Maintenance Manual content is specified in individual Specification Sections AND reviewed at the time of each Section's Submittals.

1. Submit reviewed manual content formatted and organized as required by this Section.
2. The Architect and the Commissioning Authority provide comments on whether the content of operations and maintenance submittals are acceptable.
3. Where applicable, clarify and update reviewed manual content to correspond to revisions and field conditions.

1.03 SUBMITTALS

A. Format: Submit operations and maintenance manuals in the following format.

1. A single PDF electronic file. Assemble each manual into a composite electronically indexed file. Submit on digital media acceptable to the Architect.

   a. Name each indexed document file in the composite electronic index with the applicable item name. Include a complete electronically linked operation and maintenance directory.
   b. Enable inserted reviewer comments on draft submittals.

2. Submit (3) three paper copies. Include a complete operation and maintenance directory. Enclose title pages and directories in clear plastic sleeves. The Architect shall return (2) two copies.

B. Initial Manual Submittal: Submit a draft copy of each manual at least (30) thirty calendar days before beginning demonstration and training. The Architect and the Commissioning Authority shall make comments on whether the general scope and content of manual are acceptable.

C. Final Manual Submittal: Submit each manual in final form before requesting an inspection for Substantial Completion, and at least (15) fifteen business days before beginning

demonstration and training. The Architect and the Commissioning Authority returns (1) one copy with comments.

1. Correct or revise each manual to address the AGENCY's and the Commissioning Authority's comments. Submit copies of each corrected manual within (15) fifteen business days of receipt of the AGENCY's and the Commissioning Authority's comments, and before beginning demonstration and training.

PART 2 - PRODUCTS

2.01 OPERATION AND MAINTENANCE DOCUMENTATION DIRECTORY

A. Directory: Prepare a single, comprehensive directory of emergency, operation, maintenance data and materials, listing items and their location in a manner that facilitates ready access to desired information. Include a section in the directory for each of the following.

1. List of Documents
2. List of System and Subsystems
3. List of Equipment
4. Table of Contents

B. List of Systems and Subsystems: List systems alphabetically. Include references to operation and maintenance manuals that contain information about each system.

C. List of Equipment: List equipment for each system, organized alphabetically by system. For pieces of equipment not part of system, list alphabetically in a separate list.

D. Tables of Contents: Include a table of contents for each emergency, operation, and maintenance manual.

E. Identification: In the documentation directory, and in each operation and maintenance manual, identify each system, subsystem, and piece of equipment with the same designation used in the Contract Documents. If no designation exists, then assign a designation in conformance with ASHRAE Guideline 4, "Preparation of Operating and Maintenance Documentation for Building Systems."

2.02 REQUIREMENTS FOR EMERGENCY, OPERATION AND MAINTENANCE MANUALS

A. Organization: Unless otherwise indicated, organize each manual into a separate section for each system and subsystem and a separate section for each piece of equipment not part of a system. Each manual must contain the following materials, in the order listed:

1. Title Page
2. Table of Contents
3. Manual Contents

B. Title Page: Include the following information:

1. Subject Matter included in Manual
2. Name and address of the Project
3. Name and address of the Owner
4. Date of Submittal
5. Name and contact information for the Contractor

6. Name and contact information for Construction Manager
7. Name and contact information for the Architect
8. Name and contact information for the Commissioning Authority
9. Names and contact information for Major Consultants to the Architect that designed the systems contained in the manuals
10. Cross-Reference to related systems in other Operation and Maintenance Manuals

C. Table of Contents: List each product included in manual, identified by product name, indexed to the content of the volume and cross-referenced to the Specification Section Number in the Project Manual.

1. If operation or maintenance documentation requires more than (1) one volume to accommodate data, include a comprehensive table of contents for all volumes in each volume of the set.

D. Manual Contents: Organize the manual contents into manageable-sized sets. Arrange contents alphabetically by system, subsystem and equipment. Where possible, assemble instructions for subsystems, equipment, and components of (1) one system into a single binder.

E. Electronic Manual Files: Submit manuals in the form of a multiple-file composite electronic PDF file for each manual type.

1. Electronic Files: Where available, use electronic files prepared by the manufacturer. Where scanning paper documents is required, configure scanned files for minimum readable file size.
2. File Names and Bookmarks: Enable bookmarking of individual documents based on file names.

   a. Name document files to correspond to the system, subsystem and equipment names used in manual directory and table of contents.
   b. Group documents for each system and subsystem into individual composite bookmarked files, then create a composite manual. Resulting bookmarks must reflect the system, subsystem and equipment names in a readily navigated file tree.
   c. Configure the electronic manual to display the bookmark panel when the file is opened.

F. Paper Copy Manuals: Submit manuals in the form of hard copy, bound and labeled volumes.

1. Binders: Furnish heavy-duty, three-ring, vinyl-covered, loose-leaf or post-type binders, in thicknesses necessary to accommodate contents and sized to hold 8-1/2-by-11-inch paper; with a clear plastic sleeve on the spine to hold a label describing the contents and with pockets inside the covers to hold folded oversize sheets.

   a. If (2) two or more binders are necessary to accommodate system data, organize that data in each binder into groupings by subsystem and related components. Cross-reference other binders as necessary to provide essential information for proper operation or maintenance of equipment or system.
   b. Identify each binder on the front and spine with a printed title reading, “OPERATION AND MAINTENANCE MANUAL”. Include the project title or name, and subject matter of contents, and indicate Specification Section Number on bottom of spine. Indicate the volume number for multiple volume sets.

2. Dividers: Furnish heavy-paper dividers with plastic-covered tabs for each section of the manual. Identify contents on each tab. Include a typed list on each divider of the products and major components of equipment included in the section, cross-referenced to specification Section number and title of the Project Manual.
3. Protective Plastic Sleeves: Furnish transparent plastic sleeves designed to enclose diagnostic software storage media for computerized electronic equipment.
4. Supplementary Text: Include supplementary text prepared on 8-1/2-by-11-inch white bond paper.
5. Drawings: Attach reinforced, punched binder tabs on the drawings and bind with text.

    a. If oversize drawings are necessary, fold drawings to same size as text pages and use as foldouts.
    b. If drawings are too large to create foldouts, fold and place drawings in labeled envelopes and the bind envelopes in rear of manual. At appropriate locations in manual, insert typewritten pages indicating drawing titles, descriptions of drawing contents and drawing locations.

2.03 EMERGENCY MANUALS

A. Content: Organize emergency manual into a separate section for each of the following.

1. The Type of Emergency
2. Emergency Instructions
3. Emergency Procedures

B. Type of Emergency: Include emergency instructions and procedures for each system, subsystem, piece of equipment and component where applicable for each of the following emergencies:

1. Fire
2. Flood
3. Earthquake
4. Gas leak
5. Water leak
6. Power failure
7. Water outage
8. System, subsystem, or equipment failure
9. Chemical release or spill

C. Emergency Instructions: Describe and explain warnings, trouble indications, error messages, and similar codes and signals. Include responsibilities of the Owner's operating personnel for notification of the installer, supplier and manufacturer to maintain warranties.

D. Emergency Procedures: Include the following, as applicable.

1. Instructions on stopping
2. Shutdown instructions for each type of emergency
3. Operating instructions for conditions outside normal operating limits
4. Required sequences for electric or electronic systems
5. Special operating instructions and procedures

2.04 OPERATION MANUALS

A. Content: In addition to the requirements of this Section, include operation data required in individual Specification Sections and the following:

1. System, subsystem, and equipment descriptions. Use designations for systems and equipment indicated on Contract Documents.
2. Performance and design criteria if the Contractor delegated design responsibility.
3. Operating standards
4. Operating procedures
5. Operating logs
6. Wiring diagrams
7. Control diagrams
8. Piped system diagrams
9. Precautions against improper use
10. License requirements including inspection and renewal dates

B. Descriptions: Include the following:

1. Product name and model number. Use designations for products indicated on Contract Documents.
2. Manufacturer's name.
3. Equipment identification with serial number of each component.
4. Equipment function.
5. Operating characteristics.
6. Limiting conditions.
7. Performance curves.
8. Engineering data and tests.
9. Complete nomenclature and number of replacement parts.

C. Operating Procedures: Include the following, as applicable.

1. Startup procedures.
2. Equipment or system break-in procedures.
3. Routine and normal operating instructions.
4. Regulation and control procedures.
5. Instructions on stopping.
6. Normal shutdown instructions.
7. Seasonal and weekend operating instructions.
8. Required sequences for electric or electronic systems.
9. Special operating instructions and procedures.

D. Systems and Equipment Controls: Describe the sequence of operation, and diagram controls as installed.

E. Piped Systems: Diagram piping as installed and identify color-coding where required for identification.

2.05 PRODUCT MAINTENANCE MANUALS

A. Content: Organize product maintenance manuals into a separate section for each product, material, and finish. Include source information, product information, maintenance procedures, repair materials and sources, and warranties and bonds, as described below.

B. Source Information: List each product included in the product maintenance manual, identified by manufacturer’s product name and arranged to match the maintenance manual’s table of contents. For each product, list the name, address, and telephone number of installer or supplier and maintenance service agent; and cross-reference the specification Section number and title in the project manual, and the drawing or schedule designation or identifier, where applicable.

C. Product Information: Include the following, as applicable.

1. Product name and model number.
2. Manufacturer's name.
3. Color, pattern, and texture.
4. Material and chemical composition.
5. Reordering information for specially manufactured products.

D. Maintenance Procedures: Include manufacturer's written recommendations and the following.

1. Inspection procedures.
2. Types of cleaning agents to be used and methods of cleaning.
3. List of cleaning agents and methods of cleaning detrimental to product.
4. Schedule for routine cleaning and maintenance.
5. Repair instructions.
6. Recommended Preventative Maintenance schedule for 48 months

E. Repair Materials and Sources: Include lists of materials and local sources of materials and related services.

F. Warranties and Bonds: Include copies of warranties and bonds and lists of circumstances and conditions that negatively affect validity of warranties or bonds.

1. Include procedures to follow and required notifications for warranty claims.

2.06 SYSTEMS AND EQUIPMENT MAINTENANCE MANUALS

A. Content: For each system, subsystem, and piece of equipment not part of a system, include source information, manufacturers' maintenance documentation, maintenance procedures, maintenance and service schedules, spare parts list and source information, maintenance service contracts, and warranty and bond information, as described below.

B. Source Information: List each system, subsystem, and piece of equipment included in the systems and equipment manual, identified by manufacturer’s product name, and arranged to match the system and equipment manual's table of contents. For each product, list the name, address, and telephone number of installer or supplier and maintenance service agent; and cross-reference the specification Section number and title in the project manual, and the drawing or schedule designation or identifier, where applicable.

C. Manufacturers' Maintenance Documentation: Furnish the manufacturers' maintenance documentation for each component part or piece of equipment, including the following.

1. Standard maintenance instructions and bulletins.
2. Drawings, diagrams, and instructions required for maintenance, including disassembly and component removal, replacement, and assembly.
3. Identification and nomenclature of parts and components.
4. List of items recommended to be stocked as spare parts.

D. Maintenance Procedures: Include the following information and items that detail essential maintenance procedures.

1. Testing and inspection instructions.
2. Troubleshooting guide.
3. Precautions against improper maintenance.
4. Disassembly; component removal, repair, and replacement; and reassembly instructions.
5. Aligning, adjusting, and checking instructions.
6. Demonstration and training video recordings, if available.

E. Maintenance and Service Schedules: Include service and lubrication requirements, list of required lubricants for equipment, and separate schedules for preventive and routine maintenance and service with standard time allotments.

1. Scheduled Maintenance and Service: Tabulate actions for daily, weekly, monthly, quarterly, semiannual, and annual frequencies.
2. Maintenance and Service Record: Include the manufacturers' forms for recording maintenance.

F. Spare Parts List and Source Information: Include lists of replacement and repair parts, with parts identified and cross-referenced to the manufacturers' maintenance documentation and local sources of maintenance materials and related services.

G. Maintenance Service Contracts: Include copies of maintenance agreements with the name and telephone number of service agents.

H. Warranties and Bonds: Include copies of warranties and bonds and lists of circumstances and conditions that negatively affect the validity of warranties or bonds.

1. Include procedures to follow and required notifications for warranty claims.

PART 3 - EXECUTION

3.01 MANUAL PREPARATION

A. Operation and Maintenance Documentation Directory: Prepare a separate manual that provides an organized reference to emergency manuals, operation manuals, and maintenance manuals.

B. Emergency Manual: Assemble a complete set of emergency information indicating procedures for use by emergency personnel and by the Owner's operating personnel for types of emergencies indicated.

C. Product Maintenance Manual: Assemble a complete set of maintenance data indicating care and maintenance of each product, material, and finish incorporated into the work.

D. Operation and Maintenance Manuals: Assemble a complete set of operation and maintenance data indicating operation and maintenance of each system, subsystem, and piece of equipment not part of a system.

1. Engage a factory-authorized service representative to assemble and prepare information for each system, subsystem, and piece of equipment not part of a system.

2. Prepare a separate manual for each system and subsystem as an instructional manual for use by the Owner's operating personnel.

E. Manufacturers' Data: Where manuals contain manufacturers' standard printed data, include only these sheets pertinent to the product or component installed. Mark each sheet to identify each product or component incorporated into the work. If data include more than one item in a tabular format, identify each item using appropriate references from the Contract Documents. Identify data applicable to the work and delete references to information not applicable.

1. Prepare supplementary text if the manufacturers' standard printed data are not available, and where the information is necessary for proper operation and maintenance of equipment or systems.

F. Drawings: Prepare drawings supplementing the manufacturers' printed data to illustrate the relationship of component parts of equipment and systems, and to illustrate control sequences and flow diagrams. Coordinate these drawings with the information contained in the record drawings to ensure the correct illustration of completed installations.

1. Do not use original project record documents as part of the operation and maintenance manuals.
2. Comply with requirements of newly-prepared record drawings in Section 01 78 39.

G. Comply with the requirements of Section 01 77 00 for schedule for submitting operation and maintenance documentation.

END OF SECTION

SECTION 01 78 36

WARRANTIES AND BONDS

PART 1 - GENERAL

1.01 SUMMARY

This Section Includes:

A. Administrative and Procedural Requirements for Specified Warranties, Bonds, Service and Maintenance Contracts.

1.02 ADMINISTRATIVE REQUIREMENTS

A. Organize warranty and bond documents into an orderly sequence based on the project manual table of contents.

1. Bind warranties and bonds into a heavy-duty, commercial-quality 3-ring, vinyl-covered, loose-leaf binders, thickness as necessary to accommodate contents, sized to receive 8-1/2-inch by 11-inch paper with a clear plastic sleeve on the spine to hold labels describing the contents and with pockets inside covers to hold folded oversize sheets.
2. Provide a title page enclosed in a transparent plastic sleeve. Include the following information:
   a. Name and address of the Project
   b. Name and address of the Owner
   c. Date of Submittal
   d. Name, address and telephone number of the Contractor
   e. Name and address of the Architect
3. Provide a typed table of contents, cross-referenced to the Specifications Section number in the project manual, with the complete information for each warranty item as follows:
   a. Product Name or Assembly Description
   b. The Installer name, address and telephone number
   c. The Scope of each Warranty
   d. The Beginning Date of each Warranty, Bond or Service and Maintenance Contract
   e. The Duration of the Warranty Period, Bond or Service and Maintenance Contract
   f. Information for the proper procedure followed in the case of failure; and for instances that may affect the validity of warranty or bond
   g. Name, address and telephone number of the Contractor's responsible party
4. Provide heavy paper dividers with plastic-covered tabs for each separate warranty. Mark each tab to identify product or installation.
5. Identify each binder on the front and spine with the typed or printed title "WARRANTIES AND BONDS", the Project name and Contractor name. Indicate each volume number and the total number of volumes for multiple-volume sets.

1.03 SUBMITTALS

A. Submit (2) two original written and signed warranties and scanned PDFs for the designated portions of the work where commencement of warranties other than date of Substantial Completion is indicated.

1. For equipment or component parts of equipment put into service during construction, submit documents within (10) ten business days after final inspection and acceptance.
2. For items whose acceptance is delayed materially beyond the date of Substantial Completion, provide updated submittal within (10) ten business days after acceptance, listing date of acceptance as start of warranty period.

B. Submit (2) two original written and signed warranties and scanned PDFs within (15) fifteen business days of completion of designated portions of the work that are completed and occupied or used by the Owner during the construction period by separate agreement with the Contractor.

PART 2 - GENERAL

2.01 DISCLAIMERS AND LIMITATIONS

A. Manufacturer's disclaimers and limitations on product warranties do not relieve the Contractor of the warranty on the work that incorporates the products, nor does it relieve suppliers, manufacturers and subcontractors required to countersign special warranties with the Contractor.

B. The Owner may refuse to accept work for the project where a special warranty, certification, or similar commitment is required on such work or part of the work, until evidence is presented that entities required to countersign such commitments are willing to do so.

2.02 OWNER’S RECOURSE

A. Written warranties made to the Owner are in addition to implied warranties and do not limit the duties, obligations, rights and remedies otherwise available under the law, nor may warranty periods be interpreted as limitations on obligations, rights or remedies.

B. The Owner may reject warranties and may limit product selections to products with warranties conforming to the requirements of the Contract Documents.

PART 3 - EXECUTION

3.01 REPLACEMENT OF WORK

A. Upon determination that work covered by a warranty has failed, replace or rebuild the affected work to an acceptable condition conforming to the original Contract Documents.

B. The Contractor is responsible for the cost of replacing or rebuilding defective work regardless of whether the Owner has benefited from use of that work through a portion of its anticipated useful service life.

C. When correcting warranted work that has failed, remove and replace other work that is damaged as a result of such failure, or that must be removed and replaced to provide access for correction of warranted work.

D. When work covered by a warranty has failed and been corrected by replacement or rebuilding, reinstate the warranty by written endorsement. The reinstated warranty must be equal to the original warranty, with an equitable adjustment for depreciation.

END OF SECTION

SECTION 01 78 39
PROJECT RECORD DOCUMENTS

PART 1 - GENERAL

1.01 SUMMARY

This Section Includes:

A. Administrative and Procedural Requirements for Project Record Documents, including:

1. Record Drawings
2. Record Specifications
3. Record Submittals

1.02 DEFINITIONS

A. Documents required for construction: A complete set of all documents required by the Contract Documents, including but not limited to:

1. Contract Drawings
2. Project Manual/Specifications
3. Addenda
4. Shop Drawings
5. Product Data
6. Project Data
7. Change Orders
8. Modifications
9. Field Test Records
10. Warranties
11. Samples and Mock-Ups
12. Deferred Approval Shop Drawings

B. Field Documents: Complete set of all documents required for construction (defined above).

1. To be used for day-to-day construction of project.

C. Project Record Documents: Complete separate set of all documents required for construction (defined above) except samples and mock-ups.

1. To be used only for recording periodic changes to Contract Documents.
2. Do not use these documents for construction of project. Maintain Project Record Documents in a neat, clean condition.

1.03 SUBMITTALS

A. Record Drawings: Comply with the following:

1. Number of Copies: Submit (1) one set of marked-up record prints.
2. Submit PDF electronic files.

B. Record Specifications: Submit annotated PDF electronic files of the project's specifications, including addenda and contract modifications.

C. Record Submittals: Submit PDF electronic files of the project’s final approved submittals.

PART 2 - PRODUCTS

2.01 RECORD DRAWINGS

A. Record Prints: Maintain (1) one set of marked-up paper copies of the Contract Drawings and Shop Drawings, incorporating new and revised drawings as RFIs and modifications are issued.

1. Preparation: Mark record prints to show the actual installation where installation varies from what is originally shown. Require the individual or entity who obtained record data, whether the individual or entity is an installer, subcontractor or similar entity, to provide information for preparation of corresponding marked-up record prints.

    a. Give particular attention to information on concealed elements that are difficult to identify or measure and record later.
    b. Accurately record information in an acceptable drawing technique.
    c. Record data as soon as practicable after obtaining it.
    d. Record and check markups before enclosing concealed installations.
    e. Cross-reference record prints to corresponding archive photographic documentation.

2. Content: Types of items requiring marking include the following:

    a. Dimensional changes to the Drawings
    b. Revisions to details shown on the Drawings
    c. Depths of foundations below first floor
    d. Locations and depths of underground utilities
    e. Revisions to routing of piping and conduits
    f. Revisions to electrical circuitry
    g. Actual equipment locations
    h. Duct size and routing
    i. Locations of concealed internal utilities
    j. Modifications made as part of responses to RFIs
    k. Changes made by Change Order or Construction Change Directive
    l. Changes made following the Architect's written orders
    m. Details not on the original Contract Drawings
    n. Field records for variable and concealed conditions
    o. Record information on the work that is shown only schematically

3. Mark the Contract Drawings and Shop Drawings completely and accurately. Use personnel proficient at recording graphic information for producing marked-up record prints.
4. Mark record sets with erasable, red-colored pencil. Use other colors to distinguish between changes for different categories of the work at same location.
5. Mark important additional information that was either shown schematically or omitted from the original Drawings.
6. Note RFI numbers, Construction Change Directive numbers, alternate numbers, Change Order numbers, and similar identification, where applicable.

B. Record Digital Data Files: Promptly before inspection for the Certificate of Substantial Completion, review marked-up record prints with the Architect. When authorized, prepare a full set of corrected digital data files of the Contract Drawings as follows:

1. Format: Annotated PDF electronic file with comment function enabled.
2. Incorporate changes and additional information previously marked on record prints. Delete, re-draw and add details and notations where applicable.
3. Refer instances of uncertainty to the Architect for resolution.

C. Format: Identify and date each record Drawing; include the designation "PROJECT RECORD DRAWING" in a prominent location.

1. Record Prints: Organize record prints and newly prepared record Drawings into manageable sets. Bind each set with durable paper cover sheets. Include identification on cover sheets.
2. Format: Annotated PDF electronic file with comment function enabled.
3. Record Digital Data Files: Organize digital data information into separate electronic files that correspond to each sheet of the Contract Drawings. Name each file with the sheet identification. Include identification in each digital data file.
4. Identification: Include the following.

a. Project Name
b. Date
c. Designation "PROJECT RECORD DRAWINGS"
d. Name of the Architect
e. Name of the Contractor

2.02 RECORD SPECIFICATIONS

A. Preparation: Mark Specifications to indicate the actual product installation where installation varies from that indicated in Specifications, addenda, and contract modifications.

1. Give particular attention to information on concealed products and installations that cannot be readily identified and recorded later.
2. Mark copy with the proprietary name and model number of products, materials, and equipment furnished, including substitutions and product options selected.
3. Record the name of manufacturer, supplier, installer, and other information necessary to provide a record of selections made.
4. Note related Change Orders and record Drawings where applicable.

B. Format: Submit record Specifications as annotated PDF electronic file.

PART 3 - EXECUTION

3.01 RECORDING AND MAINTENANCE

A. Recording: Maintain one copy of each submittal during the construction period for project record document purposes. Post changes and revisions to project record documents as they occur; do not wait until end of the project.

B. Maintenance of Record Documents and Samples: Store record documents and samples in the field office apart from the Contract Documents used for construction.

1. Maintain record documents in good order and in a clean, dry, legible condition, protected from deterioration and loss.
2. Provide access to project record documents for the AGENCY's reference during normal working hours.

END OF SECTION

SECTION 01 79 00
DEMONSTRATION AND TRAINING

PART 1 - GENERAL

1.01 SUMMARY

This Section Includes:

A. Administrative and Procedural Requirements for Instructing the Owner's personnel, including:

1. Demonstration of operation of systems, subsystems and equipment
2. Training in Operation and Maintenance of systems, subsystems, and equipment
3. Demonstration and training video recordings

1.02 ADMINISTRATIVE REQUIREMENTS

A. Coordination:

1. Coordinate the instruction schedule with the Owner's operations. Adjust schedule as necessary to minimize disrupting the Owner's operations and to ensure availability of the Owner's personnel.
2. Coordinate instructors, including providing notification of dates, times, length of instruction time and course content.
3. Coordinate content of training modules with content of approved emergency, operation, and maintenance manuals. Do not submit instruction program until operation and maintenance data has been reviewed and approved by the AGENCY.

B. Pre-Instruction Conference: Conduct conference at the project site in conformance with requirements in Section 01 31 00. Review methods and procedures related to demonstration and training including, but not limited to, the following:

1. Inspect and discuss locations and other facilities required for instruction.
2. Review and finalize the instruction schedule and verify availability of educational materials, instructors' personnel, audiovisual equipment and facilities needed to avoid delays.
3. Review required content of instruction.
4. For instruction that must occur outside, review weather and forecasted weather conditions and procedures to follow if conditions are unfavorable.

1.03 SUBMITTALS

A. Informational Submittals:

1. Instruction Program: Submit an outline of the instructional program for demonstration and training, including a list of training modules and a schedule of proposed dates, times, length of instruction time; and the instructors' names for each training module. Include learning objectives and outlines for each training module.

a. Indicate proposed training modules using manufacturer-produced demonstration and training video recordings for systems, equipment and products in lieu of video recordings of live instructional modules.

2. Attendance Record: For each training module, submit a list of participants and the length of instruction time.
3. Evaluations: For each participant and for each training module, submit results and documentation of required performance-based tests.

B. Closeout Submittals:

1. Demonstration and Training Video Recordings: Submit (2) two copies within (7) seven calendar days of end of each training module.

a. Identification: On each copy, provide an applied label with the following information:

1) The Name of the Project
2) The Name and Address of the Videographer
3) The Name of the Architect
4) The Name of the Construction Manager
5) The Name of the Contractor
6) The Date of the Video Recording

2. Transcript: Provide prepared and bound transcripts in a format matching operation and maintenance manuals.

a. Mark appropriate identification on the front and spine of each binder.
b. Include a cover sheet with the same label information as the corresponding video recording.
c. On each page, include the name of the project and the date of the video recording.

3. At completion of training, submit complete training manuals for the AGENCY's use in PDF electronic file format.

1.04 QUALITY ASSURANCE

A. Facilitator Qualifications: A firm or individual experienced in training or educating maintenance personnel in a training program similar in content and extent to that indicated for this project and whose work has resulted in training or education with a record of successful learning performance.

B. Instructor Qualifications: A factory-authorized service representative experienced in operation and maintenance procedures and training.

C. Videographer Qualifications: A professional videographer who is experienced in photographing demonstration and training events or similar to those required.

PART 2 - PRODUCTS

2.01 INSTRUCTION PROGRAM

A. Program Structure: Develop an instruction program that includes individual training modules for each system and for equipment not part of a system, as required by individual specification Sections.

B. Training Modules: Develop a learning objective and teaching outline for each module. Include a description of specific skills and knowledge that each participant is expected to master. For each module, include instruction for the following, as applicable to the system, equipment or component.

1. Basis of System Design, Operational Requirements, and Criteria: Include the following:

    a. System, Subsystem and Equipment Descriptions
    b. Performance and Design Criteria (if the Contractor is delegated design responsibility)
    c. Operating Standards
    d. Regulatory Requirements
    e. Equipment Function
    f. Operating Characteristics
    g. Limiting Conditions
    h. Performance Curves

2. Documentation: Review the following items in detail:

    a. Emergency Manuals
    b. Operations Manuals
    c. Maintenance Manuals
    d. Project Record Documents
    e. Identification Systems
    f. Warranties and Bonds
    g. Maintenance Service Agreements and similar continuing commitments

3. Emergencies: Include the following, as applicable:

    a. Instructions on meaning of warnings, trouble indications and error messages
    b. Instructions on stopping
    c. Shutdown Instructions for each type of emergency
    d. Operating Instructions for conditions outside of normal operating limits
    e. Sequences for electric or electronic systems
    f. Special Operating Instructions and Procedures

4. Operations: Include the following, as applicable:

    a. Startup Procedures
    b. Equipment or System Break-In Procedures
    c. Routine and Normal Operating Instructions
    d. Regulation and Control Procedures
    e. Control Sequences
    f. Safety Procedures
    g. Instructions on Stopping
    h. Normal Shutdown Instructions
    i. Operating Procedures for Emergencies
    j. Operating Procedures for System, Subsystem or Equipment Failure
    k. Seasonal and Weekend Operating Instructions
    l. Required Sequences for Electric or Electronic Systems
    m. Special Operating Instructions and Procedures

5. Adjustments: Include the following:

    a. Alignments
    b. Checking Adjustments

c. Noise and Vibration Adjustments
d. Economy and Efficiency Adjustments

6. Troubleshooting: Include the following:

a. Diagnostic Instructions
b. Test and Inspection Procedures

7. Maintenance: Include the following:

a. Inspection Procedures
b. Types of Cleaning Agents to be used and Methods of Cleaning
c. List of Cleaning Agents and Methods of Cleaning detrimental to product
d. Procedures for Routine Cleaning
e. Procedures for Preventive Maintenance
f. Procedures for Routine Maintenance
g. Instruction on Use of Special Tools
h. Schedules for Routine and Preventative Maintenance

8. Repairs: Include the following:

a. Diagnosis Instructions
b. Repair Instructions
c. Disassembly, Component Removal, Repair, Replacement and Reassembly Instructions
d. Instructions for Identifying Parts and Components
e. Review of Spare Parts needed for Operation and Maintenance

PART 3 - EXECUTION

3.01 PREPARATION

A. Assemble educational materials necessary for instruction, including documentation and training module. Assemble training modules into a training manual organized in coordination with requirements in Section 01 78 23.

B. Setup instructional equipment at the instruction location.

C. Do not begin instruction until component, assembly or system has been tested as specified and is in correct operating condition.

3.02 INSTRUCTION

A. Facilitator: Engage a qualified facilitator to:

1. Prepare Instruction Program and Training Modules
2. Coordinate Instructors
3. Coordinate between the Contractor and the AGENCY for number of participants, instruction times and location

B. Engage qualified instructors to instruct the Owner's personnel to adjust, operate, and maintain systems, subsystems, and equipment that is not part of a system.

   1. The AGENCY furnishes the Contractor with the names and positions of all participants.

C. Scheduling: Provide instruction at mutually agreed on times. For equipment that requires seasonal operation, provide similar instruction at start of each season.

   1. Schedule training with the AGENCY with at least (7) seven calendar days advance notice.

D. Training Location and Reference Material: Conduct training onsite in the completed and fully operational facility using the actual equipment in-place. Conduct training using final operation and maintenance data submittals.

E. Evaluation: At the conclusion of each training module, assess and document each participant's mastery of module by use of a performance-based test.

F. Cleanup: Collect used and leftover educational materials and remove from the project site. Remove instructional equipment. Restore systems and equipment to condition existing before initial training use.

END OF SECTION

SECTION 02 41 19
DEMOLITION FOR REMODELING

PART 1 – GENERAL

1.01 SECTION INCLUDES

A. Removal and legal disposal of designated building equipment and fixtures.

B. Removal and legal disposal of designated construction.

C. Identification of utilities.

D. Removal / protection of items as indicated.

1.02 SUBMITTALS

A. Submit under provisions of Section 01 33 01 - Submittals.

B. Schedule: Indicated demolition and removal sequence and location of salvageable items; location and construction of temporary work.

1.03 PROJECT RECORD DOCUMENTS

A. Submit under provisions of Section 01 14 01.

B. Accurately record actual locations of capped utilities, subsurface obstructions.

1.04 REGULATORY REQUIREMENTS

A. Conform to applicable portions of the 2019 California Building Code for demolition work and safety of structure.

B. Obtain and pay for required permits from governing authorities.

C. Notify affected utility companies before starting work and comply with their requirements

D. Do not close or obstruct width of egress or exits.

E. Do not disable or disrupt building fire or life safety systems without minimum three day prior written notice to the Engineer.

F. Conform to procedures of the governing environmental health authority upon discovery of hazardous or contaminated materials.

G. Conform as applicable to the latest construction safety orders of the Division of Industrial Safety, State of California; and the Associated General Contractors' Manual of Accident Prevention in Construction, latest edition.

PART 2 - PRODUCTS (not used)

PART 3 – EXECUTION

3.01 PREPARATION

A. Demolition Conference. As soon as possible after award of contract, meet with Engineer. Review requirements (contract documents), submittals, status of coordinating work, and establish demolition schedule. Review requirements for shut-off, capping, and continuation of utility services, and protection of on-site operations and facilities.

B. Provide, erect, and maintain temporary barriers and/or partitions at locations indicated or as required.

C. Erect and maintain weatherproof closures for exterior openings.

D. Erect and maintain temporary partitions to prevent spread of dust, odors, and noise throughout building or to adjacent spaces and permit continued occupancy by existing building occupants during demolition.

E. Provide protective surface treatments, cloths, and/or sheathing to prevent damage to floor, wall, and ceiling surfaces and components which are to remain. Provide traffic path protection for existing floor surface.

F. Protect existing landscaping and irrigation systems, which are to remain.

G. Prevent movement of any part of the existing structure; provide required bracing and shoring.

H. Mark location of utilities.

3.02 DEMOLITION REQUIREMENTS

A. Conduct demolition to minimize interference with adjacent and occupied building areas.

B. Cease operations immediately if structure appears to be in danger or hazardous materials are discovered. Notify Engineer. Do not resume operations until directed.

C. Control air pollution caused by dust and dirt; comply with all Air Pollution Control District regulations. Provide adequate water sprinkling of exterior areas during demolition operation as required to reduce dust to a minimum.

D. The Contractor shall be responsible for damage to existing work which is to remain. Existing work that is subject to injury, because of operations being carried on adjacent thereto, shall be covered, boarded up, or substantially enclosed and protected. Permanent openings used as thoroughfares for transporting work and materials shall have heads, jambs and sills well blocked and boarded.

E. Interruption of Existing Services. Contractor's attention is called to the requirement to maintain occupancy and use of existing building and the need to protect existing conduit, piping, ducts, and other such items. The Contractor will be held responsible for the prompt, proper and Engineer approved repair of damage caused by demolition work. New work and installations shall not impair the proper functioning of the existing facility.

F. Maintain existing utilities indicated to remain; keep in service and protect against damage during demolition operations. Do not interrupt existing utilities serving other occupied facilities, except when authorized in writing by the Engineer.
Provide temporary utility services during interruptions to existing facilities, as acceptable to the Engineer.

G. Conduct operations with minimum interference to public or private access. Conduct demolition operations and removal of debris to ensure minimum interference with roads, driveways, walkways, corridor, and other adjacent occupied or used facilities. Do not

close or obstruct corridors or other occupied or used facilities without approval by the Engineer.

H. Maintain pedestrian egress and access routes at all times. Do not close or obstruct corridors, walkways or sidewalks without written approval of the Engineer. Ensure safe passage of pedestrians around area of demolition; erect temporary on-site fenced, railed or covered pedestrian passageways in conformance with Table 3306.1 of the 2019 California Building Code.

3.03 DEMOLITION

A. Disconnect cap, and identify designated utilities within demolition areas.

B. Demolish designated components in an orderly and careful manner. Protect existing supporting structural members and existing utilities to remain.

C. Saw Cutting. Where portions of existing construction are shown to be removed, the edges and ends of all exposed limits of removal shall be saw-cut parallel to adjacent wall, ceiling, or floor lines.

D. Remove existing improvements, both above grade and below grade, to the extent indicated or as required, including pavements, foundations, walls and other such items as applicable.

E. Fill below-grade areas and voids resulting from demolition operations. Use approved soil material, placed in horizontal layers with each layer compacted to 95% relative density.

F. Patching. Where existing construction, finishes, trim and other such items are removed, existing remaining construction and finishes shall be patched and repaired to meet, join, align, and match existing and / or new adjacent construction and finish.

G. Surface damage, marring, and impact damage resulting from demolition, removal and remodeling shall be repaired or replaced to original appearance, using materials matching original finishes.

H. Except where noted otherwise, remove demolished materials and excess earth from site and dispose in a legal manner. Do not burn or bury materials on site.

I. Salvaged Materials. Where existing materials and equipment are shown to be removed or disconnected and are not indicted for re-use in the work, these items shall be transported from the site as they are removed. Re-use of salvaged materials is prohibited except when authorized in writing by the Engineer.

J. Remove demolished materials from site as work progresses. Upon completion of work, leave areas in clean condition. Thoroughly clean the interior and exterior of the building, including hardware, floors, roofs, sills, ledges, glass or other surfaces where debris, spots and dirt may have collected as a result of demolition work.

J. Remove temporary work.

END OF SECTION

SECTION 03 00 10
CONCRETE FASTENING SYSTEMS

A. Expansion Anchors: Anchors shall be of the type and manufacture as shown on the drawings. Sleeve-type anchors shall not be used.

B. Powder Actuated Fasteners: Fasteners shall be of the type and manufacturer as shown on drawings. Installation tools shall be by the fastener manufacturer.

C Epoxy Anchors: Anchors and epoxy material shall be of the type and manufacture as shown on the drawings.

D. Installation and Testing: A copy of the manufacturer's printed installation instructions and the ICC report shall be provided to the Inspector of Record; installation shall be in strict compliance with those documents. Testing requirements for structural expansion anchors, epoxy anchors, ceiling anchors, and ceiling fasteners are indicated on the drawings.

E Protection of Existing Steel Reinforcing: Prior to drilling for any expansion anchors, locate existing reinforcing steel with by non-destructive test procedure.

END OF SECTION

SECTION 03 30 00

CAST-IN-PLACE CONCRETE

PART 1 - GENERAL

1.1 RELATED DOCUMENTS

A. Drawings and general provisions of the Contract, including General and Supplementary Conditions and Division 01 Specification Sections, apply to this Section.

1.2 SUMMARY

A. Section includes cast-in-place concrete, including formwork, reinforcement, concrete materials, mixture design, placement procedures, and finishes.

1.3 DEFINITIONS

A. Cementitious Materials: Portland cement alone or in combination with one or more of the following: blended hydraulic cement, fly ash, slag cement, other pozzolans, and silica fume; materials subject to compliance with requirements.

B. W/C Ratio: The ratio by weight of water to cementitious materials.

1.4 PREINSTALLATION MEETINGS

A. Preinstallation Conference: Conduct conference at Project site.

1. Before submitting design mixtures, review concrete design mixture and examine procedures for ensuring quality of concrete materials. Require representatives of each entity directly concerned with cast-in-place concrete to attend, including the following:
   a. Contractor's superintendent.
   b. Independent testing agency responsible for concrete design mixtures.
   c. Ready-mix concrete manufacturer.
   d. Concrete Subcontractor.
   e. Special concrete finish Subcontractor.
   f. Owner’s Inspector.

2. Review special inspection and testing and inspecting agency procedures for field quality control, concrete finishes and finishing, cold- and hot-weather concreting procedures, curing procedures, construction contraction and isolation joints, forms and form removal limitations, shoring and reshoring procedures, anchor rod and anchorage device installation tolerances, steel reinforcement installation, concrete repair procedures, and concrete protection.

1.5 ACTION SUBMITTALS

A. Product Data: For each type of product.

B. Design Mixtures: For each concrete mixture. Submit alternate design mixtures when characteristics of materials, Project conditions, weather, test results, or other circumstances warrant adjustments.

1. Indicate amounts of mixing water to be withheld for later addition at Project site.

C. Construction Joint Layout: Indicate proposed construction joints required to construct the structure.

1. Location of construction joints is subject to approval of the Architect.

D. Samples: For vapor retarder.

1.6 INFORMATIONAL SUBMITTALS

A. Qualification Data: For Installer and Manufacturer.

B. Material Certificates: For each of the following, signed by manufacturers:

1. Cementitious materials.
2. Admixtures.
3. Steel reinforcement and accessories.
4. Curing compounds.
5. Floor and slab treatments.
6. Bonding agents.
7. Vapor retarders.
8. Repair materials.

C. Material Test Reports: For the following, from a qualified testing agency:

1. Aggregates: Sampling at source of supply if required by the enforcement agency in accordance with 2016 CBC Section 1903A.5. Include service record data indicating absence of deleterious expansion of concrete due to alkali aggregate reactivity.
2. Cementitious Materials: Sampling at source of supply for portland cement, blended hydraulic cement, mineral admixtures, in accordance with 2016 CBC Section 1910A.1.

D. Welding certificates: For field welding of reinforcing bars.

E. Floor surface flatness and levelness measurements indicating compliance with specified tolerances.

F. Minutes of Preinstallation conference.

1.7 QUALITY ASSURANCE

A. Installer Qualifications: An experienced installer that has specialized in concrete work with relevant experience for both cast-in-place walls and raised exterior concrete slabs with heavy pedestrian traffic. The contractor(s) shall have successfully constructed at least 5 projects in the

last 5 years involving construction of similar complexity and size required by this project. On site foremen and finishers shall also have qualifying experience on at least 5 projects over the past 5 years.

B. Manufacturer Qualifications: A firm experienced in manufacturing ready-mixed concrete products and that complies with ASTM C 94 requirements for production facilities and equipment.

1. Manufacturer certified according to NRMCA's "Certification of Ready Mixed Concrete Production Facilities."

C. Owner's Testing Agency Qualifications: An independent agency, acceptable to HCAI, qualified according to ASTM C 1077 and ASTM E 329 for testing indicated.

1. Personnel conducting field tests shall be qualified as ACI Concrete Field Testing Technician, Grade 1, according to ACI CP-1 or an equivalent certification program.
2. Personnel performing laboratory tests shall be ACI-certified Concrete Strength Testing Technician and Concrete Laboratory Testing Technician, Grade I. Testing agency laboratory supervisor shall be an ACI-certified Concrete Laboratory Testing Technician, Grade II.

D. Regulatory Requirements: Conform to 2016 CBC, Chapter 19A.

E. Welding Qualifications: Qualify procedures and personnel according to AWS D1.4. Field welders shall be Certified for the work they are performing.

F. ACI Publications: Comply with the following unless modified by requirements in the Contract Documents:

1. ACI 301, "Specifications for Structural Concrete," Sections 1 through 5.
2. ACI 117, "Specifications for Tolerances for Concrete Construction and Materials."

1.8 PRECONSTRUCTION TESTING

A. Preconstruction Testing Service: Engage a qualified testing agency to perform preconstruction testing on concrete mixtures with specified shrinkage limits or insufficient performance data.

1.9 DELIVERY, STORAGE, AND HANDLING

A. Formwork: Store materials in area protected from weather, above ground on framework or blocking, and cover with protective waterproof covering providing for adequate air circulation and ventilation. Handle materials to prevent damage.

B. Steel Reinforcement: Deliver, store, and handle steel reinforcement to prevent bending and damage.

1.10 FIELD CONDITIONS

A. Cold-Weather Placement: Comply with ACI 306.1 and as follows. Protect concrete work from physical damage or reduced strength that could be caused by frost, freezing actions, or low temperatures.

1. When average high and low temperature is expected to fall below 40 deg F for three successive days, maintain delivered concrete mixture temperature within the temperature range required by ACI 301.
2. Do not use frozen materials or materials containing ice or snow. Do not place concrete on frozen subgrade or on subgrade containing frozen materials.
3. Do not use calcium chloride, salt, or other materials containing antifreeze agents or chemical accelerators unless otherwise specified and approved in mixture designs.

B. Hot-Weather Placement: Comply with ACI 301and as follows:

1. Maintain concrete temperature below 90 deg F at time of placement. Chilled mixing water or chopped ice may be used to control temperature, provided water equivalent of ice is calculated to total amount of mixing water. Using liquid nitrogen to cool concrete is Contractor's option.
2. Fog-spray forms, steel reinforcement, and subgrade just before placing concrete. Keep subgrade uniformly moist without standing water, soft spots, or dry areas.

PART 2 - PRODUCTS

2.1 CONCRETE, GENERAL

A. ACI Publications: Comply with the following unless modified by requirements in the Contract Documents:

1. ACI 301.
2. ACI 117.

2.2 FORM-FACING MATERIALS

A. Smooth-Formed Finished Concrete: Form-facing panels that provide continuous, true, and smooth concrete surfaces. Furnish in largest practicable sizes to minimize number of joints.

1. Exterior-grade plywood panels, suitable for concrete forms, complying with:
   a. Medium-density overlay, Class 1 or better; mill-release agent treated and edge sealed.

B. Rough-Formed Finished Concrete: Plywood, lumber, metal, or another approved material. Provide lumber dressed on at least two edges and one side for tight fit.

C. Forms for Cylindrical Columns, Pedestals, and Supports: Metal, glass-fiber-reinforced plastic, paper, or fiber tubes that produce surfaces with gradual or abrupt irregularities not exceeding specified formwork surface class. Provide units with sufficient wall thickness to resist plastic concrete loads without detrimental deformation.

D. Chamfer Strips: Wood, metal, PVC, or rubber strips, 3/4 by 3/4 inch, minimum.

E. Rustication Strips: Wood, metal, PVC, or rubber strips, kerfed for ease of form removal.

F. Form-Release Agent: Commercially formulated form-release agent that does not bond with, stain, or adversely affect concrete surfaces and does not impair subsequent treatments of concrete surfaces.

1. Formulate form-release agent with rust inhibitor for steel form-facing materials.

G. Form Ties: Factory-fabricated, removable or snap-off glass-fiber-reinforced plastic or metal form ties designed to resist lateral pressure of fresh concrete on forms and to prevent spalling of concrete on removal.

1. Furnish units that leave no corrodible metal closer than 1 inch to the plane of exposed concrete surface.

2.3 STEEL REINFORCEMENT

A. Reinforcing Bars: ASTM A 615, Grade 60, deformed.

B. Low-Alloy-Steel Reinforcing Bars: ASTM A 706, deformed.

C. Plain-Steel Wire: ASTM A 1064, as drawn.

D. Galvanized-Steel Welded-Wire Reinforcement: ASTM A 1064, plain, fabricated from galvanized-steel wire into flat sheets.

2.4 REINFORCEMENT ACCESSORIES

A. Bar Supports: Bolsters, chairs, spacers, and other devices for spacing, supporting, and fastening reinforcing bars and welded-wire reinforcement in place. Manufacture bar supports from steel wire, plastic, or precast concrete according to CRSI's "Manual of Standard Practice," of greater compressive strength than concrete and as follows:

1. For concrete surfaces exposed to view, where legs of wire bar supports contact forms, use CRSI Class 1 plastic-protected steel wire or CRSI Class 2 stainless-steel bar supports.

B. Welded Bar Anchors: As indicated on drawings, or approved equal.

C. Reinforcement Bar Couplers: As indicated on drawings, or approved equal.

D. Reinforcement Bar Terminators: As indicated on drawings, or approved equal.

2.5 CONCRETE MATERIALS

A. Regional Materials: Concrete shall be manufactured within 500 miles of Project site from aggregates that have been extracted, harvested, or recovered, as well as manufactured, within 500 miles of Project site.

B. Source Limitations: Obtain each type or class of cementitious material of the same brand from the same manufacturer's plant, obtain aggregate from single source, and obtain admixtures from single source from single manufacturer.

C. Cementitious Materials:

1. Portland Cement: ASTM C 150, Type II, gray.
2. Fly Ash: ASTM C 618, Class F.

D. Normal-Weight Aggregates: ASTM C 33, Class 3M coarse aggregate or better, graded. Provide aggregates from a single source with documented service record data of at least 10 years' satisfactory service in similar applications and service conditions using similar aggregates and cementitious materials.

1. Maximum Coarse-Aggregate Size: As indicated.
2. Coarse aggregate with a maximum size of 1/2 inch shall be crushed stone.
3. Fine Aggregate: Free of materials with deleterious reactivity to alkali in cement.

E. Lightweight Aggregate: ASTM C 330, 1-inch nominal maximum aggregate size.

F. Chemical Admixtures: Certified by manufacturer to be compatible with other admixtures and that do not contribute water-soluble chloride ions exceeding those permitted in hardened concrete. Do not use calcium chloride or admixtures containing calcium chloride.

1. Water-Reducing Admixture: ASTM C 494, Type A.
2. Retarding Admixture: ASTM C 494, Type B.
3. Water-Reducing and Retarding Admixture: ASTM C 494, Type D.
4. High-Range, Water-Reducing Admixture: ASTM C 494, Type F.
5. High-Range, Water-Reducing and Retarding Admixture: ASTM C 494, Type G.
6. Plasticizing and Retarding Admixture: ASTM C 1017, Type II.
7. Shrinkage Reducing Admixture: ASTM C 494.

G. Water: ASTM C 94 potable.

2.6 VAPOR RETARDERS

A. Sheet Vapor Retarder: As indicated. Include manufacturer's recommended adhesive or pressure-sensitive tape.

2.7 CURING MATERIALS

A. Evaporation Retarder: Waterborne, monomolecular film forming, manufactured for application to fresh concrete.

B. Absorptive Cover: AASHTO M 182, Class 2, burlap cloth made from jute or kenaf, weighing approximately 9 oz./sq. yd. when dry.

C. Moisture-Retaining Cover: ASTM C 171, polyethylene film or white burlap-polyethylene sheet.

D. Water: Potable.

2.8 RELATED MATERIALS

A. Expansion- and Isolation-Joint-Filler Strips: ASTM D 1751, asphalt-saturated cellulosic fiber.

B. Bonding Agent: ASTM C 1059, Type II, nonredispersible, acrylic emulsion or styrene butadiene.

C. Void Filler: Provide the following product or approved equal.

1. Dow Building Solutions: Styrofoam “Blueboard” brand product appropriate for conditions of use.

2.9 CONCRETE MIXTURES, GENERAL

A. Prepare design mixtures for each type and strength of concrete, proportioned on the basis of laboratory trial mixture or field test data, or both, according to ACI 301.

1. Use a qualified independent testing agency for preparing and reporting proposed mixture designs based on laboratory trial mixtures.

B. Cementitious Materials: Limit percentage, by weight, of cementitious materials other than portland cement in concrete as follows:

1. Fly Ash: 25 percent.

C. Limit water-soluble, chloride-ion content in hardened concrete to 0.06 percent by weight of cement.

D. Admixtures: Use admixtures according to manufacturer's written instructions, as required for workability, weather conditions, and performance requirements.

E. Aggregates: Provide quantity of fine and coarse aggregate as determined by Testing Laboratory designing the mix.

2.10 CONCRETE MIXTURES FOR BUILDING ELEMENTS

A. General: Unless otherwise specified, concrete shall have a maximum slump of 5 inches without admixtures, and a maximum of 8 inches where water reduction or superplasticizer admixtures are used. Slump shall be measured per ASTM C143 at the point of delivery with tolerances per ASTM C94. Self consolidating concrete shall have a maximum spread of 26 inches per ASTM C1611. All concrete shall conform to 2016 CBC Section 1905A and ACI 318, and have the minimum 28 day compressive strengths in pounds per square inch indicated on the Structural Drawings.

1. Use a qualified independent testing agency for preparing and reporting proposed mixture designs based on laboratory trial mixtures. Mix proportions shall be established by a registered Civil Engineer.

B. Lightweight Concrete Fill over Metal Deck: Proportion light-weight concrete mixture as follows: Proportion normal-weight concrete mixture as follows:

1. Minimum Compressive Strength: 4000 psi at 28 days.
2. Maximum Water-Cementitious Materials Ratio: 0.50.
3. Minimum Cementitious Materials Content: 470 lb/cu. yd.
4. Slump Limit: 4 inches maximum at point of delivery.
5. Air Content: 6 percent, plus or minus 1.5 percent at point of delivery for 3/8-inch lightweight nominal maximum aggregate size.
6. Air Content: Do not allow air content of trowel-finished toppings to exceed 3 percent

C. Slabs-on-Grade and Equipment Pads on Existing Slabs: Proportion normal-weight concrete mixture as follows:

1. Minimum Compressive Strength: 3000 psi at 28 days.
2. Maximum Water-Cementitious Materials Ratio: 0.45.
3. Air Content: Do not allow air content of trowel-finished slabs to exceed 3 percent.
4. Shrinkage Limit: 0.05% maximum at 28 days.

D. Equipment Pads on Grade & Miscellaneous: Proportion normal-weight concrete mixture as follows:

1. Minimum Compressive Strength: 3000 psi at 28 days.
2. Maximum Water-Cementitious Materials Ratio: 0.50.

2.11 FABRICATING REINFORCEMENT

A. Fabricate steel reinforcement according to CRSI's "Manual of Standard Practice."

B. In case of fabricating errors, do not rebend or straighten reinforcement in a manner that will injure or weaken the material.

C. Reinforcement with any of the following defects will not be permitted in the Work:

1. Bar lengths, depths, and bends exceeding specified fabrication tolerances.
2. Bends or kinks not indicated on Drawings or final shop drawings.
3. Bars with reduced cross-section due to excessive rusting or other cause.

2.12 CONCRETE MIXING

A. Ready-Mixed Concrete: Measure, batch, mix, and deliver concrete according to ASTM C 94, and furnish batch ticket information.

1. When air temperature is between 85 and 90 deg F, reduce mixing and delivery time from 1-1/2 hours to 75 minutes; when air temperature is above 90 deg F, reduce mixing and delivery time to 60 minutes.

B. Project-Site Mixing: Measure, batch, and mix concrete materials and concrete according to ASTM C 94. Mix concrete materials in appropriate drum-type batch machine mixer.

1. For mixer capacity of 1 cu. yd. or smaller, continue mixing at least 1-1/2 minutes, but not more than 5 minutes after ingredients are in mixer, before any part of batch is released.
2. For mixer capacity larger than 1 cu. yd. increase mixing time by 15 seconds for each additional 1 cu. yd.
3. Provide batch ticket for each batch discharged and used in the Work, indicating Project identification name and number, date, mixture type, mixture time, quantity, and amount of water added. Record approximate location of final deposit in structure.

2.13 SOURCE QUALITY CONTROL

A. Inspection and Testing will be performed under provisions of Division 01 and 2016 CBC Chapter 17A.

B. Testing Laboratory will:

1. Review fabricator's Quality Assurance procedures for maintaining identification of steel reinforcement.
2. Collect certificates of compliance for steel reinforcement for record purposes.
3. Collect available test reports for record purposes.
4. Randomly sample and test reinforcement for tensile and bend tests in accordance with 2016 CBC Section 1910A.2.
5. Review mix designs and certificates of compliance for concrete materials Contractor proposes to use.

C. Provide batch plant inspection at the location where materials used in transit-mixed concrete and batched aggregates are measured in accordance with 2016 CBC Section 1705A.3.3. Inspection may be waived, subject to requirements of 2016 CBC Section 1705A.3.3.1.

PART 3 - EXECUTION

3.1 FORMWORK INSTALLATION

A. Design, erect, shore, brace, and maintain formwork, according to ACI 301, to support vertical, lateral, static, and dynamic loads, and construction loads that might be applied, until structure can support such loads.

B. Construct formwork so concrete members and structures are of size, shape, alignment, elevation, and position indicated, within tolerance limits of ACI 117.

C. Limit concrete surface irregularities, designated by ACI 347 as abrupt or gradual, as follows:

1. Class A, 1/8 inch for smooth-formed finished surfaces.
2. Class C, 1/2 inch for rough-formed finished surfaces.

D. Construct forms tight enough to prevent loss of concrete mortar.

E. Construct forms for easy removal without hammering or prying against concrete surfaces. Provide crush or wrecking plates where stripping may damage cast-concrete surfaces. Provide top forms for inclined surfaces steeper than 1.5 horizontal to 1 vertical.

1. Install keyways, reglets, recesses, and the like, for easy removal.
2. Do not use rust-stained steel form-facing material.

F. Set edge forms, bulkheads, and intermediate screed strips for slabs to achieve required elevations and slopes in finished concrete surfaces. Provide and secure units to support screed strips; use strike-off templates or compacting-type screeds.

G. Provide temporary openings for cleanouts and inspection ports where interior area of formwork is inaccessible. Close openings with panels tightly fitted to forms and securely braced to prevent loss of concrete mortar. Locate temporary openings in forms at inconspicuous locations.

H. Chamfer exterior corners and edges of permanently exposed concrete.

I. Form openings, chases, offsets, sinkages, keyways, reglets, blocking, screeds, and bulkheads required in the Work. Determine sizes and locations from trades providing such items.

J. Clean forms and adjacent surfaces to receive concrete. Remove chips, wood, sawdust, dirt, and other debris just before placing concrete.

K. Retighten forms and bracing before placing concrete, as required, to prevent mortar leaks and maintain proper alignment.

L. Coat contact surfaces of forms with form-release agent, according to manufacturer's written instructions, before placing reinforcement.

3.2 EMBEDDED ITEM INSTALLATION

A. Place and secure anchorage devices and other embedded items required for adjoining work that is attached to or supported by cast-in-place concrete. Use setting drawings, templates, diagrams, instructions, and directions furnished with items to be embedded.

1. Install anchor rods, accurately located, to elevations required and complying with tolerances in Section 7.5 of AISC 303.

3.3 REMOVING AND REUSING FORMS

A. General: Formwork for sides of beams, walls, columns, and similar parts of the Work that does not support weight of concrete may be removed after cumulatively curing at not less than 50 deg F for 24 hours after placing concrete. Concrete has to be hard enough to not be damaged by form-removal operations, and curing and protection operations need to be maintained.

1. Leave formwork for beam soffits, joists, slabs, and other structural elements that support weight of concrete in place until concrete has achieved at least 50 percent of its 28-day design compressive strength or 2000 psi, whichever is more.
2. Remove forms only if shores have been arranged to permit removal of forms without loosening or disturbing shores.

B. Clean and repair surfaces of forms to be reused in the Work. Split, frayed, delaminated, or otherwise damaged form-facing material are not acceptable for exposed surfaces. Apply new form-release agent.

C. When forms are reused, clean surfaces, remove fins and laitance, and tighten to close joints. Align and secure joints to avoid offsets. Do not use patched forms for exposed concrete surfaces unless approved by Architect.

3.4 SHORING AND RESHORING INSTALLATION

A. Comply with ACI 318 and ACI 301 for design, installation, and removal of shoring and reshoring.

B. In multistory construction, extend shoring or reshoring over a sufficient number of stories to distribute loads in such a manner that no floor or member will be excessively loaded or will induce tensile stress in concrete members without sufficient steel reinforcement.

C. Plan sequence of removal of shores and reshore to avoid damage to concrete. Locate and provide adequate reshoring to support construction without excessive stress or deflection.

3.5 VAPOR-RETARDER INSTALLATION

A. Sheet Vapor Retarders: Place, protect, and repair sheet vapor retarder according to ASTM E 1643 and manufacturer's written instructions.

1. Lap joints 6 inches and seal with manufacturer's recommended tape.

3.6 STEEL REINFORCEMENT INSTALLATION

A. General: Comply with CRSI's "Manual of Standard Practice" for fabricating, placing, and supporting reinforcement.

1. Do not cut or puncture vapor retarder. Repair damage and reseal vapor retarder before placing concrete.

B. Clean reinforcement of loose rust and mill scale, earth, ice, and other foreign materials that reduce bond to concrete.

C. Accurately position, support, and secure reinforcement against displacement. Locate and support reinforcement with bar supports to maintain minimum concrete cover. Do not tack weld crossing reinforcing bars.

1. Weld reinforcing bars according to AWS D1.4, where indicated.

D. Set wire ties with ends directed into concrete, not toward exposed concrete surfaces.

E. Install welded-wire reinforcement in longest practicable lengths on bar supports spaced to minimize sagging. Lap edges and ends of adjoining sheets at least one mesh spacing. Offset laps of adjoining sheet widths to prevent continuous laps in either direction. Lace overlaps with wire.

F. Splices:

1. Standard reinforcement splices: Lap ends, placing bars in contact, tightly wire tie. Unless indicated otherwise, comply with requirements of ACI 318, Sections 12.15 and 12.16 for minimum lap of spliced bars.
   a. Do not splice bars at points of maximum stress except where indicated. Lap splices as indicated or required to develop the full strength or stress of bars. Stagger splices in horizontal wall bars at least 40 inches longitudinally in alternate bars and opposite faces.

3.7 CONCRETE PLACEMENT

A. Before placing concrete, verify that installation of formwork, reinforcement, and embedded items is complete and that required inspections are completed.

B. Before test sampling and placing concrete, water may be added at Project site, subject to limitations of ACI 301. Report added water on delivery ticket and to project inspector.

1. Do not add water to concrete after adding high-range water-reducing admixtures to mixture.

C. Deposit concrete continuously in one layer or in horizontal layers of such thickness that no new concrete is placed on concrete that has hardened enough to cause seams or planes of weakness. If a section cannot be placed continuously, provide construction joints as indicated. Deposit concrete to avoid segregation.

1. Deposit concrete in horizontal layers of depth not to exceed formwork design pressures and in a manner to avoid inclined construction joints.
2. Consolidate placed concrete with mechanical vibrating equipment according to ACI 301.
3. Do not use vibrators to transport concrete inside forms. Insert and withdraw vibrators vertically at uniformly spaced locations to rapidly penetrate placed layer and at least 6 inches into preceding layer. Do not insert vibrators into lower layers of concrete that have begun to lose plasticity. At each insertion, limit duration of vibration to time necessary to consolidate concrete and complete embedment of reinforcement and other embedded items without causing mixture constituents to segregate.

D. Deposit and consolidate concrete for floors and slabs in a continuous operation, within limits of construction joints, until placement of a panel or section is complete.

1. Consolidate concrete during placement operations, so concrete is thoroughly worked around reinforcement and other embedded items and into corners.
2. Maintain reinforcement in position on chairs during concrete placement.
3. Screed slab surfaces with a straightedge and strike off to correct elevations.
4. Slope surfaces uniformly to drains where required.
5. Begin initial floating using bull floats or darbies to form a uniform and open-textured surface plane, before excess bleedwater appears on the surface. Do not further disturb slab surfaces before starting finishing operations.

3.8 JOINTS

A. General: Construct joints true to line with faces perpendicular to surface plane of concrete.

B. Construction Joints: Install so strength and appearance of concrete are not impaired, at locations indicated or as approved by Architect. Comply with ACI 318, Section 6.4.

1. Place joints perpendicular to main reinforcement. Continue reinforcement across construction joints unless otherwise indicated. Do not continue reinforcement through sides of strip placements of floors and slabs.
2. Form keyed joints as indicated. Embed keys at least 1-1/2 inches into concrete.
3. Locate joints for beams, slabs, joists, and girders in the middle third of spans. Offset joints in girders a minimum distance of twice the beam width from a beam-girder intersection.
4. Locate horizontal joints in walls and columns at underside of floors, slabs, beams, and girders and at the top of footings or floor slabs.
5. Use a bonding agent at locations where fresh concrete is placed against hardened or partially hardened concrete surfaces.
6. Use epoxy-bonding adhesive at locations where fresh concrete is placed against hardened or partially hardened concrete surfaces.

C. Isolation Joints in Slabs-on-Grade: After removing formwork, install joint-filler strips at slab junctions with vertical surfaces, such as column pedestals, foundation walls, grade beams, and other locations, as indicated.

1. Extend joint-filler strips full width and depth of joint, terminating flush with finished concrete surface unless otherwise indicated.

3.9 FINISHING FLOORS AND SLABS

A. General: Comply with ACI 302.1R recommendations for screeding, restraightening, and finishing operations for concrete surfaces. Do not wet concrete surfaces.

B. Scratch Finish: While still plastic, texture concrete surface that has been screeded and bull-floated or darbied. Use stiff brushes, brooms, or rakes to produce a profile amplitude of 1/4 inch in one direction.

1. Apply scratch finish to surfaces indicated to receive concrete floor toppings and to receive mortar setting beds for bonded cementitious floor finishes

C. Float Finish: Consolidate surface with power-driven floats or by hand floating if area is small or inaccessible to power-driven floats. Restraighten, cut down high spots, and fill low spots. Repeat float passes and restraightening until surface is left with a uniform, smooth, granular texture.

1. Apply float finish to surfaces indicated to receive trowel finish and to be covered with fluid-applied or sheet waterproofing, built-up or membrane roofing, or sand-bed terrazzo

D. Trowel Finish: After applying float finish, apply first troweling and consolidate concrete by hand or power-driven trowel. Continue troweling passes and restraighten until surface is free of trowel marks and uniform in texture and appearance. Grind smooth any surface defects that would telegraph through applied coatings or floor coverings.

1. Apply a trowel finish to surfaces indicated exposed to view or to be covered with resilient flooring, carpet, ceramic or quarry tile set over a cleavage membrane, paint, or another thin-film-finish coating system
2. Finish surfaces to the following tolerances, according to ASTM E 1155, for a randomly trafficked floor surface:
   a. Specified overall values of flatness, F(F) 30; and of levelness, F(L) 20; with minimum local values of flatness, F(F) 24; and of levelness, F(L) 15; for suspended slabs.

E. Trowel and Fine-Broom Finish: Apply a first trowel finish to surfaces indicated where ceramic or quarry tile is to be installed by either thickset or thinset method. While concrete is still plastic, slightly scarify surface with a fine broom.

1. Comply with flatness and levelness tolerances for trowel-finished floor surfaces.

F. Broom Finish: Apply a broom finish to exterior concrete platforms, steps, ramps, and elsewhere as indicated.

1. Immediately after float finishing, slightly roughen trafficked surface by brooming with fiber-bristle broom perpendicular to main traffic route. Coordinate required final finish with Architect before application.

G. Slip-Resistive Finish: Before final floating, apply slip-resistive aggregate or aluminum granule finish where indicated and to concrete stair treads, platforms, and ramps. Apply according to manufacturer's written instructions and as follows:

1. Uniformly spread 25 lb/100 sq. ft. of dampened slip-resistive over surface in one or two applications. Tamp aggregate flush with surface, but do not force below surface.
2. After broadcasting and tamping, apply float finish.
3. After curing, lightly work surface with a steel wire brush or an abrasive stone and water to expose slip-resistive

H. Dry-Shake Floor Hardener Finish: After initial floating, apply dry-shake floor hardener to surfaces according to manufacturer's written instructions and as follows:

1. Uniformly apply dry-shake floor hardener at a rate of 100 lb/100 sq. ft. unless greater amount is recommended by manufacturer.
2. Uniformly distribute approximately two-thirds of dry-shake floor hardener over surface by hand or with mechanical spreader, and embed by power floating. Follow power floating with a second dry-shake floor hardener application, uniformly distributing remainder of material, and embed by power floating.
3. After final floating, apply a trowel finish. Cure concrete with curing compound recommended by dry-shake floor hardener manufacturer and apply immediately after final finishing.

3.10 MISCELLANEOUS CONCRETE ITEM INSTALLATION

A. Filling In: Fill in holes and openings left in concrete structures after work of other trades is in place unless otherwise indicated. Mix, place, and cure concrete, as specified, to blend with in-place construction. Provide other miscellaneous concrete filling indicated or required to complete the Work.

B. Curbs: Provide monolithic finish to interior curbs by stripping forms while concrete is still green and by steel-troweling surfaces to a hard, dense finish with corners, intersections, and terminations slightly rounded.

C. Equipment Bases and Foundations:

1. Coordinate sizes and locations of concrete bases with actual equipment provided.
2. Construct concrete bases 6 inches high unless otherwise indicated, and extend base not less than 6 inches in each direction beyond the maximum dimensions of supported equipment unless otherwise indicated or unless required for seismic anchor support.
3. Minimum Compressive Strength: 3000 psi at 28 days.
4. Install dowel rods to connect concrete base to concrete floor. Unless otherwise indicated, install dowel rods on 12-inch centers around the full perimeter of concrete base.
5. For supported equipment, install galvanized or stainless steel anchor bolts that extend through concrete base and anchor into structural concrete substrate unless otherwise detailed on the construction documents.
6. Prior to pouring concrete, place and secure anchorage devices. Use setting drawings, templates, diagrams, instructions, and directions furnished with items to be embedded.
7. Cast anchor-bolt insert into bases. Install anchor bolts to elevations required for proper attachment to supported equipment.

D. Nonshrink Grout: Provide nonshrink grout for setting bolts and dowels in new and existing concrete, and leveling baseplates and bearing plates. Clean existing concrete surfaces of foreign materials prior to grouting operations. Add water to premixed grout only at Project site in accordance with manufacturer's instructions. Coordinate grouting operations with Division 05 steel sections.

E. Miscellaneous Items: Provide areaways, cast-in-place valve boxes, pits, splash blocks, bases, and other miscellaneous concrete as indicated on the Drawings and required to complete the Work.

3.11 CONCRETE PROTECTING AND CURING

A. General: Protect freshly placed concrete from premature drying and excessive cold or hot temperatures. Comply with ACI 306.1 for cold-weather protection and ACI 301 for hot-weather protection during curing.

1. Protect exposed concrete finish such as bases, curbs, and similar work as necessary to prevent damage resulting from impact or from subsequent work or rubbish.
2. Protect work of other Sections from damage by Work of this Section with heavy kraft paper.
   a. Maintain protection in effective condition for as long as need for protection exists.
   b. Control use of water within the building so that no damage to previously installed work or existing structure and finish is permitted to occur.

B. Evaporation Retarder: Apply evaporation retarder to unformed concrete surfaces if hot, dry, or windy conditions cause moisture loss approaching 0.2 lb/sq. ft. x h before and during finishing operations. Apply according to manufacturer's written instructions after placing, screeding, and bull floating or darbying concrete, but before float finishing.

C. Formed Surfaces: Cure formed concrete surfaces, including underside of beams, supported slabs, and other similar surfaces. If forms remain during curing period, moist cure after loosening forms. If removing forms before end of curing period, continue curing for remainder of curing period.

D. Unformed Surfaces: Begin curing immediately after finishing concrete. Cure unformed surfaces, including floors and slabs, concrete floor toppings, and other surfaces.

E. Cure concrete according to ACI 308.1, by one or a combination of the following methods:

1. Moisture Curing: Keep surfaces continuously moist for not less than seven days with the following materials:
   a. Water.
   b. Continuous water-fog spray.
   c. Absorptive cover, water saturated, and kept continuously wet. Cover concrete surfaces and edges with 12-inch lap over adjacent absorptive covers.

2. Moisture-Retaining-Cover Curing: Cover concrete surfaces with moisture-retaining cover for curing concrete, placed in widest practicable width, with sides and ends lapped at least 12 inches, and sealed by waterproof tape or adhesive. Cure for not less than seven days. Immediately repair any holes or tears during curing period, using cover material and waterproof tape.
   a. Moisture cure or use moisture-retaining covers to cure concrete surfaces to receive floor coverings.
   b. Moisture cure or use moisture-retaining covers to cure concrete surfaces to receive penetrating liquid floor treatments.
   c. Cure concrete surfaces to receive floor coverings with either a moisture-retaining cover or a curing compound that the manufacturer certifies does not interfere with bonding of floor covering used on Project.

3. Curing Compound: Apply uniformly in continuous operation by power spray or roller according to manufacturer's written instructions. Recoat areas subjected to heavy rainfall within three hours after initial application. Maintain continuity of coating and repair damage during curing period.

a. Removal: After curing period has elapsed, remove curing compound without damaging concrete surfaces by method recommended by curing compound manufacturer.

4. Curing and Sealing Compound: Apply uniformly to floors and slabs indicated in a continuous operation by power spray or roller according to manufacturer's written instructions. Recoat areas subjected to heavy rainfall within three hours after initial application. Repeat process 24 hours later and apply a second coat. Maintain continuity of coating and repair damage during curing period.

3.12 LIQUID FLOOR TREATMENT APPLICATION

A. Penetrating Liquid Floor Treatment: Prepare, apply, and finish penetrating liquid floor treatment according to manufacturer's written instructions.

1. Remove curing compounds, sealers, oil, dirt, laitance, and other contaminants and complete surface repairs.
2. Do not apply to concrete that is less than 28days old.
3. Apply liquid until surface is saturated, scrubbing into surface until a gel forms; rewet; and repeat brooming or scrubbing. Rinse with water; remove excess material until surface is dry. Apply a second coat in a similar manner if surface is rough or porous.

B. Sealing Coat: Uniformly apply a continuous sealing coat of curing and sealing compound to hardened concrete by power spray or roller according to manufacturer's written instructions.

3.13 CONCRETE SURFACE REPAIRS

A. Defective Concrete: Repair and patch defective areas when approved by Architect or Structural Engineer. Remove and replace concrete that cannot be repaired and patched to Architect's or Structural Engineer’s approval.

B. Patching Mortar: Mix dry-pack patching mortar, consisting of 1 part portland cement to 2-1/2 parts fine aggregate passing a No. 16 (1.18-mm) sieve, using only enough water for handling and placing.

C. Repairing Formed Surfaces: Surface defects include color and texture irregularities, cracks, spalls, air bubbles, honeycombs, rock pockets, fins and other projections on the surface, and stains and other discolorations that cannot be removed by cleaning.

1. Immediately after form removal, cut out honeycombs, rock pockets, and voids more than 1/2 inch in any dimension to solid concrete. Limit cut depth to 3/4 inch. Make edges of cuts perpendicular to concrete surface. Clean, dampen with water, and brush-coat holes and voids with bonding agent. Fill and compact with patching mortar before bonding agent has dried. Fill form-tie voids with patching mortar or cone plugs secured in place with bonding agent.
2. Repair defects on surfaces exposed to view by blending white portland cement and standard portland cement so that, when dry, patching mortar matches surrounding color. Patch a test area at inconspicuous locations to verify mixture and color match before proceeding with patching. Compact mortar in place and strike off slightly higher than surrounding surface.
3. Repair defects on concealed formed surfaces that affect concrete's durability and structural performance as determined by Architect.

D. Repairing Unformed Surfaces: Test unformed surfaces, such as floors and slabs, for finish and verify surface tolerances specified for each surface. Correct low and high areas. Test surfaces sloped to drain for trueness of slope and smoothness; use a sloped template.

1. Repair finished surfaces containing defects. Surface defects include spalls, popouts, honeycombs, rock pockets, crazing and cracks in excess of 0.01 inch wide or that penetrate to reinforcement or completely through unreinforced sections regardless of width, and other objectionable conditions.
2. After concrete has cured at least 14 days, correct high areas by grinding.
3. Correct localized low areas during or immediately after completing surface finishing operations by cutting out low areas and replacing with patching mortar. Finish repaired areas to blend into adjacent concrete.
4. Correct other low areas scheduled to receive floor coverings with a repair underlayment. Prepare, mix, and apply repair underlayment and primer according to manufacturer's written instructions to produce a smooth, uniform, plane, and level surface. Feather edges to match adjacent floor elevations.
5. Correct other low areas scheduled to remain exposed with a repair topping. Cut out low areas to ensure a minimum repair topping depth of 1/4 inch to match adjacent floor elevations. Prepare, mix, and apply repair topping and primer according to manufacturer's written instructions to produce a smooth, uniform, plane, and level surface.
6. Repair defective areas, except random cracks and single holes 1 inch or less in diameter, by cutting out and replacing with fresh concrete. Remove defective areas with clean, square cuts and expose steel reinforcement with at least a 3/4-inch clearance all around. Dampen concrete surfaces in contact with patching concrete and apply bonding agent. Mix patching concrete of same materials and mixture as original concrete, except without coarse aggregate. Place, compact, and finish to blend with adjacent finished concrete. Cure in same manner as adjacent concrete.
7. Repair random cracks and single holes 1 inch or less in diameter with patching mortar. Groove top of cracks and cut out holes to sound concrete and clean off dust, dirt, and loose particles. Dampen cleaned concrete surfaces and apply bonding agent. Place patching mortar before bonding agent has dried. Compact patching mortar and finish to match adjacent concrete. Keep patched area continuously moist for at least 72 hours.

E. Perform structural repairs of concrete, subject to Architect's approval, using epoxy adhesive and patching mortar.

F. Repair materials and installation not specified above may be used, subject to Architect's approval.

3.14 FIELD QUALITY CONTROL

A. Special Inspections: Owner will engage a special inspector and qualified testing and inspecting agency approved by HCAI to perform field tests and inspections and prepare test reports.

B. Inspections:

1. Steel reinforcement placement.
2. Steel reinforcement welding.
3. Steel reinforcement mechanical splices and terminators.
4. Headed bolts and studs.
5. Verification of use of required design mixture.
6. Concrete placement, including conveying and depositing.
7. Curing procedures and maintenance of curing temperature.

8. Verification of concrete strength before removal of shores and forms from beams and slabs.

C. Concrete Tests: Testing of composite samples of fresh concrete obtained according to ASTM C 172and in accordance with 2016 CBC Section 1903A.1 shall be performed according to the following requirements:

1. Testing Frequency: Obtain one composite sample for each day's pour of each concrete mixture exceeding 5 cu. yd., but less than 25 cu. yd., plus one set for each additional 50 cu. yd. or fraction thereof.
   a. When frequency of testing provides fewer than four compressive-strength tests for each concrete mixture, testing shall be conducted from at least four randomly selected batches or from each batch if fewer than four are used.
   b. Conform to testing frequency of ACI-318 as modified by 2016 CBC Section 1905A.1.16.

2. Slump: ASTM C 143; one test at point of placement for each composite sample, but not less than one test for each day's pour of each concrete mixture. Perform additional tests when concrete consistency appears to change.
3. Air Content: ASTM C 231, pressure method, for normal-weight concrete; ASTM C 173, volumetric method, for structural lightweight concrete; one test for each composite sample, but not less than one test for each day's pour of each concrete mixture. Testing is only required for concrete mixed in which air content maximum or minimum limits are specified.
4. Concrete Temperature: ASTM C 1064; one test hourly when air temperature is 40 deg F and below or 80 deg F and above, and one test for each composite sample.
5. Unit Weight: ASTM C 567, fresh unit weight of structural lightweight concrete; one test for each composite sample, but not less than one test for each day's pour of each concrete mixture.
6. Compression Test Specimens: ASTM C 31.
   a. Cast and laboratory cure five standard cylinder specimens for each composite sample.

7. Compressive-Strength Tests: ASTM C 39; test one set of two laboratory-cured specimens at 7 days and one set of two specimens at 28 days.
   a. Test one set of two field-cured specimens at 7 days and one set of two specimens at 28 days. Hold one specimen and do not test unless needed.
   b. A compressive-strength test shall be the average compressive strength from a set of two specimens obtained from same composite sample and tested at age indicated.

8. When strength of field-cured cylinders is less than 85 percent of companion laboratory-cured cylinders, Contractor shall evaluate operations and provide corrective procedures for protecting and curing in-place concrete.
9. Strength of each concrete mixture will be satisfactory if every average of any three consecutive compressive-strength tests equals or exceeds specified compressive strength and no compressive-strength test value falls below specified compressive strength by more than 500 psi.
10. Test results shall be reported in writing to Structural Engineer, concrete manufacturer, and Contractor within 48 hours of testing. Reports of compressive-strength tests shall contain Project identification name and number, date of concrete placement, name of concrete testing and inspecting agency, location of concrete batch in Work, design compressive strength at 28 days, concrete mixture proportions and materials, compressive breaking strength, and type of break for both 7- and 28-day tests.

11. Nondestructive Testing: Impact hammer, sonoscope, or other nondestructive device may be permitted by Architect but will not be used as sole basis for approval or rejection of concrete.
12. Shrinkage: For cast-in-place concrete with specified shrinkage limits, laboratory cast and cure three standard specimens for each mix design. Drying shrinkage specimens shall be 4-inch by 4-inch by 11-inch prisms with an effective gage length of 10 inches, fabricated, cured, dried and measured in accordance with ASTM C 157 modified as follows: specimens shall be removed from molds at an age of 23 ±1 hours after trial batching, shall be placed immediately in water at 70 degrees F ±3 degrees F for at least 30 minutes, and shall be measured within 30 minutes thereafter to determine original length and then submerged in saturated lime water at 73 degrees F ±3 degrees F. Measurement to determine expansion expressed as a percentage of original length shall be made at age 7 days. This length at age 7 days shall be the base length for drying shrinkage calculations ("0" days drying age). Specimens then shall be stored immediately in a humidity control room maintained at 73 degrees F ±3 degrees F and 50 percent ±4 percent relative humidity for the remainder of the test. Measurements to determine shrinkage expressed as percentage of base length shall be made and reported separately for 7, 14, 21, 28, and 56 days of drying after 7 days of moist curing. The drying shrinkage deformation of each specimen shall be computed as the difference between the base length (at "0" days drying age) and the length after drying at each test age. The average drying shrinkage deformation of the specimens shall be computed to the nearest 0.0001 at each test age. If the drying shrinkage of any specimen departs from the average of that test age by more than 0.0004 inch, the results obtained from that specimen shall be disregarded. Results of the shrinkage test shall be reported to the nearest 0.001 percent of shrinkage. Compression test specimens shall be taken in each case from the same concrete used for preparing drying shrinkage specimens. These tests shall be considered a part of the normal compression tests for the project. Allowable shrinkage limitations shall be as specified in Part 2, herein.
13. Water-to-Cement Ratio: Confirm water used in batching and added during delivery or on site complies with the approved mix design water-to-cement ratio. No testing is required.
14. Additional Tests: Testing and inspecting agency shall make additional tests of concrete when test results indicate that slump, air entrainment, compressive strengths, or other requirements have not been met, as directed by Structural Engineer. Testing and inspecting agency may conduct tests to determine adequacy of concrete by cored cylinders complying with ASTM C 42 or by other methods as directed by Structural Engineer.
15. Additional testing and inspecting, at Contractor's expense, will be performed to determine compliance of replaced or additional work with specified requirements.
16. Correct deficiencies in the Work that test reports and inspections indicate do not comply with the Contract Documents.

D. Reinforcement Splice Tests: Splices to be installed shall be randomly selected at the job site by the inspector and tested.

1. Tests shall be conducted on each different reinforcing bar size and the frequency of tests shall be as follows:

   a. 1 out of the first 10 splices
   b. 1 out of the next 90 splices
   c. 1 out of the next 100 splices

2. Splices shall develop in tension or compression at least 125 percent of the specified yield strength of the bar. In addition, splices identified as Type 2 shall develop 100 percent of the specified tensile strength of the reinforcing bar.

3. If failure of the tested splice should occur prior to obtaining 125 percent of specified yield strength (and 100-percent of the specified tensile strength for Type 2 couplers only), then

25 percent of all couplers shall be tested. If additional failures of the tested splices occur with the increased testing frequency, then all couplers shall be rejected.

E. Measure floor and slab flatness and levelness according to ASTM E 1155 within 72 hours of finishing.

3.15 PROTECTION OF LIQUID FLOOR TREATMENTS

A. Protect liquid floor treatment from damage and wear during the remainder of construction period. Use protective methods and materials, including temporary covering, recommended in writing by liquid floor treatments installer.

END OF SECTION

SECTION 05 05 12

HOT-DIP GALVANIZING

PART 1 - GENERAL

1.1 SUMMARY

A. Section Includes:
   1. Hot-dip galvanizing.
   2. Surface preparation.
   3. Repair materials.
   4. Supplementary components and accessories normally furnished or necessary for complete galvanizing, whether or not such items are indicated on the Drawings or included in the Specifications.

1.2 REFERENCES

A. Abbreviations and Acronyms:
   1. AGA: American Galvanizer's Association.
   2. DFT: Dry Film Thickness.
   3. HDG: Hot-Dip Galvanized.
   4. NAAMM: National Association of Architectural Metal Manufacturers.
   5. SSPC: The Society for Protective Coatings.

1.3 ADMINISTRATIVE REQUIREMENTS

A. Coordination:
   1. Proposed substitution requests and submittals that change the quality (grade) or the generic chemistry of specified galvanizing or repair materials are prohibited and returned to the Contractor without review or responsive action, except to record non-conformance with this requirement.
   2. Specified coverage rates and thicknesses are minimum.

1.4 SUBMITTALS

A. Action Submittals: Submit the following for responsive action (formal review and approval).
   1. Galvanizing Schedule: Submit galvanizing schedule indicating material category and thickness, and minimum coating grade mil thickness for each item.
B. Informational Submittals: Submit the following for information (informal review: responsive action not expected or required, except to record non-conformance with submittal requirements).
C. Qualification Statements: Submit written descriptions confirming experience specified in QUALITY ASSURANCE article below.
D. Certificates: Submit certificates signed by the galvanizer stating coated items are hot- dip galvanized in conformance with the Contract Documents.
E. Indicate ASTM standards used for each galvanized coating and certify all coated items meet or exceed that ASTM standard's minimum requirements.

a. Provide detailed description of the material processed and quenching, if any.

1.5 QUALITY ASSURANCE

A. Quality Standards:

1. Galvanizing: Comply with the requirements of NAAMM documents AMP 500, "*Metal Finishes Manual"* and AMP 504, "*Finishes for Carbon Steel and Iron"*.
2. Repair: Recondition zinc-coated steel welded joints in conformance with AWS publication WZC (D19.0), "*Welding Zinc-Coated Steel*".

B. Qualifications:

1. Galvanizer: Company or individuals must have at least 5 years' experience galvanizing items for at least 30 previous projects similar to this project in size, material, design, and complexity.
2. Supervisors: Individuals must have at least 7 years' experience galvanizing items for at least 30 previous projects similar to this project in size, material, design, and complexity, including at least 2 years' supervisory experience directing and leading galvanizers.

1.6 HANDLING

A. Receiving: Inspect all deliveries for deteriorated, damaged, and defective items.

1. Reject items that are not packaged in a manner that prevents damage; or that exhibit deterioration or damage or have damaged or open packaging or containers.
2. Unload and store only inspected and accepted items.

B. Storage: Store unloaded items as shipped. Furnish adequate dunnage and bracing during storage.

1. Prevent stored items from contacting the floor or ground, from soiling and staining, and from deterioration and damage.
2. If items are not stored in an enclosed location, then cover the tops and sides with securely-tied, waterproof, and breathable covers. Unvented polyethylene tarpaulins do not qualify as breathable covers and are prohibited. (due to potential accumulation of moisture beneath tarpaulin during certain environmental conditions)
3. Incline covered items to ensure maximum drainage of accumulated moisture.
4. Do not leave items uncovered where they might be exposed to weather or become wet from rain, mist, relative humidity, condensation, frost, and other sources of moisture; or exposed to other sources of deterioration and damage

C. Handling: Handle items in a manner that that prevents damage.

D. Damaged Item Replacement: Promptly remove and replace deteriorated, damaged, or defective galvanized items with undamaged new galvanized items that do not exhibit deterioration, damage, or defects.

E. Packaging Waste Management: Do not burn or bury construction waste at the project site. Remove and legally dispose of all construction waste away from the project site.

PART 2 - PRODUCTS

2.1 HOT-DIP GALVANIZING

A. Description: Zinc galvanic coatings applied in the shop or factory.

B. Application: Applied to iron and steel items
   1. in concrete or masonry installations;
   2. at exterior locations completely or partially exposed to weather, humidity, moisture, or precipitation, except where high performance coatings are indicated; and
   3. elsewhere, where indicated.

C. Materials:
   1. Zinc: ASTM B 6, HG (High Grade) or better (at least 99.95 percent pure zinc).
   2. Bath Composition: ASTM A 123.

D. Accessories: Provide accessories and secondary items normally furnished or necessary for complete galvanizing; or supplied, required, recommended, or accepted by the fabricator or galvanizer for actual in-service conditions applicable to the project.

2.2 SURFACE PREPARATION:

A. Remove oils, organic materials, mill primers, paints, crayon marks, grease- or oil-based marks, and similar materials from metal surfaces prior to starting galvanizing operations. Where permanent identification of a galvanized item is required, provide stamped or seep stencil markings.

B. Blast-clean and flux (recommended method of processing high strength steels for galvanizing to avoid hydrogen embrittlement); or pre-clean with alkaline cleaner, and then acid pickle and flux.

2.3 FINISHES

A. Exposed Natural Finish Items: Furnish galvanized items with a bright regular spangle (recognized, faceted, metallic surface appearance) finish.

B. Painted Finish Items: Furnish galvanized items with a minimized spangle (good surface for paint application when minimal spangle show-through is desired).

2.4 REPAIR MATERIALS

A. Galvanizing Repair Solder:
   1. Description: Lead-free, high zinc content solder formulated specifically for repairs to zinc coatings.
   2. Applications: Used for
      a. shop repair or restoration of small defects in the surfaces of freshly galvanized items directly out of the kettle;
      b. field repair or restoration of damaged zinc coatings caused by welding, brazing, cutting with an oxy-acetylene torch, and similar activities.
      c. field repair or restoration of zinc coatings on exposed-in-service HDG surfaces indicated as retaining a natural zinc finish, when accepted in writing by the Architect, and
   3. Products: Provide one of the following, or equal.
      a. “All-State Galvover” manufactured by ESAB.

b. "Galvanite" manufactured by Kapp Alloy & Wire, Inc.
c. "Zaclon Alloy Repair Rod" manufactured by Zaclon, Inc.

B. Cold Galvanizing Repair Compound:
1. Description: At least 95-percent pure zinc and epoxy resin-based galvanizing repair material.
2. Applications: Used for the repair or restoration of damaged zinc coatings on exposed-in-service HDG surfaces indicated as retaining a natural zinc finish.
3. Restrictions: May be used to repair damaged zinc coatings on exposed-in-service HDG surfaces only after accepted in writing by the Architect,
4. Products: Provide one of the following, or equal.
a. "Devcon Z" manufactured by ITW Devcon.
b. "Zinc Clad Cold Galvanizing" manufactured by The Sherwin Williams Co.
c. "ZRC Galvilite" manufactured by ZRC Worldwide.

C. Galvanizing Repair Paint:
1. Description: Zinc-rich organic primer conforming to SSPC-Paint 20 Type II (Organic) zinc-rich primers and AISC requirements for Class B surface slip coefficient rating (minimum mean slip coefficient of at least 0.50).
2. Applications: Used for the repair or restoration of damaged zinc coatings on concealed -in-service HDG surfaces indicated as receiving a painted finish.
3. Product: Provide one of the following, or equal.
a. "Carbozinc 859, Color 0300" (green) manufactured by the Carboline Co.
b. "Amercoat 68HS" (reddish-gray) manufactured by PPG Industries, Inc.
c. "Tneme-Zinc Series 90-97" (reddish-gray) manufactured by the Tnemec Co.
4. Requisite Properties:
a. Thickness: Apply to a DFT of at least 3 plus or minus 0.5 mils per coat, when measured in conformance with SSPC-PA 2. Provide at least 2 coats.
b. Color: Reddish-gray or other standard color furnished by the primer manufacturer.
5. Performance Requirements:
a. Zinc Dust Pigment: ASTM D 520 Type III composition classification (maximum 0.002 percent lead).
b. Minimum Dry Film Adhesion: At least 800 psi pull, when tested in conformance with ASTM D 4541.
c. Minimum Humidity Resistance: No blistering, cracking, rusting, or film delamination after at least 1,000 hours exposure, when tested in conformance with ASTM D 4585.
d. Minimum Salt Spray Resistance: No blistering, cracking, rusting, or film delamination nor more than 1/32-inch rust creep at scribe after at least 10,000 hours exposure, when tested in conformance with ASTM B 117.

2.5 SOURCE QUALITY CONTROL

A. Tests and Inspections:
1. Perform thickness testing and inspection of zinc coatings in conformance with the guidelines outlined in AGA publication "*The Inspection of Products Hot-Dip Galvanized after Fabrication*" and ASTM A 123.

2. Determine whether zinc coating thicknesses conform to specified minimum thicknesses by taking measurements using a magnetic, electromagnetic, or eddy-current gauge in conformance with ASTM E 376.
3. Record results on galvanizing schedule.
4. Re-galvanize non-conforming work.

PART 3 - EXECUTION

3.1 EXAMINATION

A. Oversight: Ensure an adequate number of supervisors are present and proper supervision practices are followed in the shop before the galvanizer begins work and at all times during galvanizing.

B. Evaluation and Assessment:
   1. Identify conditions that do not conform to the referenced standard requirements and recommendations.
   2. Perform or arrange and pay costs for all remedial work necessary to correct or improve deficient conditions, without limitation, before the galvanizer begins work.

3.2 PREPARATION

A. Protection: Follow procedures outlined in ASTM A 143 both to safeguard against and test for hydrogen embrittlement.

B. Surface Preparation:
   1. Remove oils, organic materials, mill primers, paints, crayon marks, grease- or oil-based marks, and similar materials from metal surfaces prior to starting galvanizing operations. Where permanent identification of a galvanized item is required, provide stamped or seep stencil markings.
   2. Blast-clean and flux (recommended method of processing high strength steels for galvanizing to avoid hydrogen embrittlement); or pre-clean with alkaline cleaner, and then acid pickle and flux.

3.3 GALVANIZING

A. General: Galvanize items in conformance with ASTM A 123. Plug vent holes with silicone sealant after galvanizing.
   1. Coating Thickness: Produce a continuous and fully-adhering zinc coating that is reasonably smooth.
      a. Coating thickness must conform to the minimum thickness requirements indicated in ASTM A 123 Table 2, based on the material category and material thickness indicated in Table 1.
      b. Galvanized assemblies consisting of varying material category and material thicknesses must receive the minimum coating thickness grade for all members equal to or exceeding the maximum highest material category coating grade.
      c. Excessive dross, rough surfaces, blisters, lumpiness, runs, edge tears, and spikes are prohibited, and considered defective work.
   2. Coating Appearance: Galvanized items must be smooth and free from uncoated areas, pits, craters, blisters, flux deposits, dross inclusions, and other types of

projections and defects that may interfere with the items' intended use.

B. Special Techniques: Galvanize castings; rolled, pressed and forged items; and bolts, nuts, washers, and similar threaded fasteners, in conformance with ASTM A 153.

1. Coating Thickness: Zinc coating must have uniform thickness conforming to the minimum thickness requirements indicated in ASTM A 153 Table 1, based on the material category and thickness of material each item belongs.
2. Coating Appearance: Galvanized items must be smooth and free from uncoated areas, pits, craters, blisters, flux deposits, dross inclusions, and other types of projections and defects that may interfere with the items' intended use.

3.4 QUENCHING

A. Painted Finish Items:

1. Do not water-quench galvanized items painted after galvanizing. (doing so may leave residue on surfaces that cause paint adhesion problems or require added surface preparation prior to painting)
2. Do not chromate-quench galvanized items painted after galvanizing. (hexavalent chromium is often used as a wet-storage stain inhibitor; chromate interferes with paint adhesion)
3. Do not phosphate-quench galvanized items coated with a zinc-rich paint after galvanizing. (doing so reduces the electrical conductivity of the paint)

B. Natural Finish Items (zinc finish without added paint or other coatings): If required to prevent wet storage stain, quench freshly-galvanized steel in a passivating solution.

3.5 CORRECTION AND REPAIR

A. Non-conforming, damaged, and defective work must be brought into conformance with the Contract Documents. Correct and repair as necessary, without limitation, including arranging all correction and repair work and paying all correction and repair costs, until accepted in writing by the Architect.

B. Corrective and repair work must be performed in conformance with a correction and repair plan submitted to and accepted in writing by the Architect before correction or repair work begins. At a minimum, correction and repair plans must include

1. written descriptions of non-conforming, damaged, and defective work;
2. supporting sketches, diagrams, photographs, and other visual depictions of non-conforming, damaged, and defective work; and
3. similar written descriptions and visual depictions of Contractor-proposed corrections and repairs.

C. Arrange and pay costs for removing and replacing work that cannot be corrected or repaired to the Architect's acceptance.

3.6 PROTECTION

A. Protect galvanized items from wet storage stain, soiling, deterioration, and damage until Substantial Completion.

B. Do not store anything on, adjacent to, or against galvanized items unless they are protected from damage, as accepted in writing by the Architect. Do not use installed

galvanized items as work surfaces.

C. Remove protection when it's no longer needed and before Substantial Completion.

END OF SECTION

SECTION 05 05 13
SHOP-APPLIED STEEL PRIMER

PART 1 - GENERAL

1.1 SUMMARY

A. Section Includes:
   1. Shop-applied steel primer.
   2. Repair materials.
   3. Surface preparation.
   4. Supplementary components and accessories normally furnished or necessary for a complete installation, whether or not such items are indicated on the Drawings or included in the Specifications.

B. Related Requirements:
   1. Section 09 00 40 for painting steel surfaces

1.2 RELATED DOCUMENTS

A. This specification
   1. supersedes any surface preparation and priming requirements contained in Section 05 12 00, and
   2. supplements the requirements of Section 05 05 13 to create a complete high-performance steel coating system

1.3 REFERENCES

A. Abbreviations and Acronyms:
   1. AISC: American Institute of Steel Construction.
   2. DFT: Dry Film Thickness.
   3. HDG: Hot-Dip Galvanized.
   4. NACE: National Association of Corrosion Engineers.
   5. NAAMM: National Association of Architectural Metal Manufacturers.

B. Definitions:
   1. Manufacturer: Means the primer manufacturer, unless otherwise indicated.
   2. SSPC Environmental Zones:
      a. Zone 0: Dry interiors where structural steel is embedded in concrete, encased in masonry, or protected by membrane or non-corrosive contact type fireproofing.
   b. Zone 1A: Normally-dry interior or temporary protection.
   c. Zone 1B: Normally-dry exteriors.
   d. Zone 2A: Frequently wet by fresh water, including condensation, splash, spray, or frequent immersion.
   e. Zone 2B: Frequently wet by salt water, including condensation, splash, spray, or

frequent immersion.

f. Zone 2C: Fresh water immersion. Coating is constantly submerged.

g. Zone 2D: Salt water immersion. Coating is constantly submerged.

1.4 ADMINISTRATIVE REQUIREMENTS

A. Coordination:

1. Unless otherwise indicated, prime all steel surfaces throughout the Project, except the following.
   a. Items or portions of items receiving field-applied cementitious fireproofing.
   b. Items or portions of items embedded in concrete or mortar, except primer must extend at least 2 inches below the finished concrete surface of partially-embedded items.
   c. Faying surfaces of connections using slip critical bolts.
   d. Field-welded surfaces, including flange surfaces supporting metal decking.
   e. HDG surfaces indicated as having a natural finish.
2. Coordinate primers for compatibility with paint and coating systems indicated in other specification sections.
3. Proposed substitution requests and submittals that change the quality (grade) or generic chemistry of specified primers are prohibited and returned to the Contractor without review or responsive action, except to record non-conformance with this requirement.
4. Specified coverage rates and thicknesses are minimum. If manufacturer's recommended coverage rates differ from specified rates, then
   a. consult the manufacturer's representative and obtain manufacturer-recommended rates printed on manufacturer's letterhead;
   b. assume the manufacturer-recommended coverage rates govern; and
   c. promptly submit an RFI to the Architect for resolution; include manufacturer-recommended coverage rates with the RFI.

1.5 SUBMITTALS

A. Action Submittals: Submit the following for responsive action (formal review and approval).

1. Product Data: Submit manufacturer's product data, specifications, and all other information necessary to show conformance to the Contract Documents, excluding material safety data sheets (MSDSs), which are returned to the Contractor without review or responsive action.
2. Primer Schedule:
   a. Prepare a list of specified primers and their project locations, with selected products identified by generic type and manufacturer's product name for each coat of every finish.
   b. Identify substrates to which each specified primer is applied, including surface preparation methods for each substrate.

B. Informational Submittals: Submit the following for information (informal review: responsive action not expected or required, except to record non-conformance with submittal requirements).

1. Manufacturer's Instructions: Submit manufacturer-prepared published instructions for

proper primer surface preparation and installation.

a. If manufacturer's instructions are unavailable or do not apply to specific project conditions, then consult the manufacturer's representative and obtain project-specific supplemental instructions printed on manufacturer's letterhead.

b. Promptly distribute supplemental instructions to the Architect, who may have comments that lead to contract modifications or minor changes in the work.

2. Qualification Statements: Submit written descriptions confirming experience specified in QUALITY ASSURANCE article below.

1.6 QUALITY ASSURANCE

A. Source Limitations:

1. Primer must be obtained through one source from the same manufacturer (to ensure compatibility).

a. Certain primers may be obtained from more than one manufacturer, but only when used for separate installations.

b. Primers provided for each different installation must be obtained from the same source and manufacturer.

2. Provide secondary materials, components, accessories and other items from sources required, recommended, or accepted by the primary manufacturer for actual in- service conditions applicable to the project.

B. Quality Standard: Shop-primed items must conform to the requirements of NAAMM documents AMP 500, "*Metal Finishes Manual"* and AMP 504, "*Finishes for Carbon Steel and Iron"*.

C. Qualifications:

1. Installer: Company or individuals must have at least 5 years' experience installing primer for at least 30 previous projects similar to this project in size, material, design, and complexity. Only a company certified by the AISC as having a current P3-Sophisticated Painting Endorsement (SPE) certification may apply shop primers.

2. Supervisors: Individuals must have at least 7 years' experience installing primer for at least 30 previous projects similar to this project in size, material, design, and complexity, including at least 2 years' supervisory experience directing and leading primer installers.

1.7 PROJECT CONDITIONS

A. Ambient Conditions: Install primer only when ambient temperature, RH, and other environmental conditions fall within ranges required, recommended, or accepted by the manufacturer.

B. Other Conditions: Do not apply primer where dust is generated or liquids are sprayed.

PART 2 - PRODUCTS

2.1 MANUFACTURERS

A. Manufacturers: Provide products manufactured by one of the following, or equal.

1. Carboline Co.

2. PPG Industries, Inc.

3. Tnemec Co.

2.2 SHOP APPLIED STEEL PRIMER

A. Acrylic Primer:
   1. Description: Hydrophobic acrylic high performance coating primer
   2. Application: Applied to steel exposed to interior exposed service conditions.
   3. Product: Provide “Uni-Bond DF Series 115” manufactured by the Tnemec Co., or equal.
   4. Requisite Properties:
      a. Minimum Thickness: Applied to a DFT between 2.0 and 3.5 mils per coat.
      b. Colors:
         1) Shop-Applied Primer: Match Tnemec color 10-1009, “Gray”.
         2) Field-Applied Spot Primer: Match Tnemec color 00WH, “Tnemec White”.
   5. Performance Requirements:
      a. Dry Film Adhesion: A minimum rating of at least 5B, when tested in conformance with ASTM D 3359.
      b. Humidity Resistance:
      c. Salt Spray Resistance: No blistering, cracking, rusting, or delaminating of film and no rust creep at scribe after at least 500 hours exposure, when tested in conformance with ASTM B 117.
      d. Minimum Slip Coefficient Rating: At least 0.50 (AISC Class B surface), when tested in conformance with ASTM A 490.

B. Zinc-Rich Primer:
   1. Description: Zinc-rich high-performance coating primer.
   2. Application: Applied to steel exposed to exterior exposed service conditions subject to wetting.
   3. Product: Provide “Tneme-Zinc Series 90-97” manufactured by the Tnemec Co., or equal.
   4. Requisite Properties:
      a. Minimum Thickness: Applied to a DFT between 2.0 and 3.5 mils per coat.
      b. Color: Reddish-gray or other standard color furnished by the manufacturer.
      c. Zinc Dust Pigment: ASTM D 520 Type III composition classification (not more than 0.002 percent lead).
   5. Performance Requirements:
      a. Dry Film Adhesion: At least 800 pounds per square inch pull, when tested in conformance with ASTM D 4541.
      b. Humidity Resistance: No blistering, cracking, rusting, or delaminating of film after at least 1,000 hours exposure, when tested in conformance with ASTM D 4585.
      c. Salt Spray Resistance: No blistering, cracking, rusting, or delaminating of film, and not more than 1/32-inch rust creep at scribe after at least 10,000 hours exposure, when tested in conformance with ASTM B 117.
      d. Minimum Slip Coefficient Rating: At least 0.50 (AISC Class B surface), when tested in conformance with ASTM A 490.

2.3 REPAIR MATERIALS

A. Zinc-Rich Spot Primer:
   1. Description: Zinc-rich aromatic urethane organic primer.
   2. Application: Field-applied to repair damaged shop-applied zinc-rich primer.
   3. Product: Provide “Hydro-Zinc 94-H20” manufactured by the Tnemec Co., or equal.
   4. Requisite Properties:
      a. Minimum Thickness: Applied to a DFT between 2.5 and 3.5 mils per coat.
      b. Color: Greenish-gray or other standard color furnished by the manufacturer.
      c. Zinc Dust Pigment: ASTM D 520 Type III composition classification (not more than 0.002 percent lead).
   5. Performance Requirements:
      a. Dry Film Adhesion: At least 800 pounds per square inch pull, when tested in conformance with ASTM D 4541.
      b. Humidity Resistance: No blistering, cracking, rusting, or delaminating of film after at least 1,000 hours exposure, when tested in conformance with ASTM D 4585.
      c. Salt Spray Resistance: No blistering, cracking, rusting, or delaminating of film, and not more than 1/32-inch rust creep at scribe after at least 10,000 hours exposure, when tested in conformance with ASTM B 117.
      d. Minimum Slip Coefficient Rating: At least 0.50 (AISC Class B surface), when tested in conformance with ASTM A 490.

B. Other Spot Primers: Provide spot primer identical to the selected shop-applied primer originally used to prime surfaces.

2.4 ACCESSORIES

A. Flash Rust Inhibitor/Salt Remover:
   1. Description: Blast and wash down-water additive that prevents flash rusting of wet abrasive and water-blasted ferrous metal surfaces; and of dry-blasted surfaces in a pressurized wash down.
   2. Product: Product: Provide “HoldTight 102” manufactured by HoldTight Solutions Inc., or equal.

B. Other Accessories: Provide accessories and secondary items normally furnished or necessary for a complete installation; or supplied, required, recommended, or accepted by the fabricator or galvanizer for actual in-service conditions applicable to the project.

2.5 SURFACE PREPARATION

A. Concealed and Interior Exposures:
   1. Application: Applied to steel subjected to concealed and interior service conditions subject to wetting.
   2. Surface Preparation: Prepare surfaces in conformance with manufacturer-prepared published and supplemental instructions, and SSPC surface preparation standard SSPC-SP3, “*Power Tool Cleaning*”, when measured in conformance with ASTM D 4417 Method B (Surface Profile Depth Micrometer).

B. Exterior Moderate Exposures:

1. Application: Applied to steel subjected to moderate exterior service conditions.
2. Surface Preparation: Prepare surfaces in conformance with manufacturer-prepared published and supplemental instructions, and SSPC surface preparation standard SSPC-SP6/NACE 3, "*Commercial Blast Cleaning*" to a minimum surface profile of at least 1.5 mils, when measured in conformance with ASTM D 4417 Method B (Surface Profile Depth Micrometer).

C. Exterior Severe Exposures and Immersion Service:
1. Application: Applied to steel subjected to severe exterior service conditions and immersion conditions.
2. Surface Preparation: Prepare surfaces in conformance with manufacturer-prepared published and supplemental instructions, and SSPC surface preparation standard SSPC-SP10/NACE 2, "*Near-White Blast Cleaning*" to a minimum surface profile of at least 2.0 mils, when measured in conformance with ASTM D 4417 Method B (Surface Profile Depth Micrometer).

D. Unknown or Incompatible Primers:
1. Application: Use when unknown shop- or factory-applied primers are discovered; or when high-performance steel primers are chemically or adhesively incompatible with shop- or factory-applied primers.
2. Surface Preparation: Apply a full prime coat of specified spot primer on all surfaces as a tie-coat for subsequent intermediate and top coats.

PART 3 - EXECUTION

3.1 EXAMINATION

A. Oversight: Ensure an adequate number of supervisors are present and proper supervision practices are followed in the shop and at the project site before the installer begins work and at all times during installation.

B. Verification: Verify that surfaces conform to the manufacturer's requirements or recommendations and satisfy all other conditions that might affect the quality of installation or the durability, appearance, or performance of installed primer s.

C. Evaluation and Assessment:
1. Identify project conditions that do not conform to the manufacturer's instructions and other requirements and recommendations.
2. Perform or arrange and pay costs for all remedial work necessary to correct or improve deficient conditions, without limitation, before the installer begins work.

3.2 PREPARATION

A. Substrate Preparation: Prepare substrates as required, recommended, or accepted by the manufacturer without limitation; and in a manner that does not result in any warranty or guarantee becoming void.

3.3 INSTALLATION

A. General Requirements:
1. Install primer using materials and methods required, recommended, or accepted by the manufacturer, along with manufacturer-recommended accessories and

techniques.

2. Installed primer must be warrantable. Do not install, correct, or replace primer in a manner that results in any warranty or guarantee becoming void.

B. Special Techniques:

1. To avoid surface contaminant pick-up, promptly prime prepared surfaces as soon as practicable after and within the same day as surface preparation.

3.4 CORRECTION AND REPAIR

A. Clean and prepare damaged primed surfaces in conformance with manufacturer's instructions and SSPC surface preparation standard SSPC-SP11 "*Power Tool Cleaning to Bare Metal*".

1. Sand smooth and re-clean.
2. Spot-prime bare metal surfaces with specified primer applied to a total spot primer DFT of at least 5 mils.

3. Overlap undamaged primer areas with spot primer at least 2 inches.

3.5 PROTECTION

A. Protect installed primer from deterioration and damage until coating or covering primed surfaces.

B. Do not store anything on, adjacent to, or against primed surfaces unless they are protected from damage, as accepted in writing by the manufacturer's representative. Do not use primed surfaces as work surfaces.

C. Remove protection when it's no longer needed and before coating or covering primed surfaces.

END OF SECTION

SECTION 05 12 13

ARCHITECTURALLY EXPOSED STRUCTURAL STEEL

PART 1 - GENERAL

1.1 SUMMARY

A. Section Includes:
1. AESS appearance and erection requirements.
2. Supplementary components and accessories normally furnished or necessary for a complete installation, whether or not such items are indicated on the Drawings or included in the Specifications.

B. Related Requirements:
1. Section 05 05 13 for shop-applied primer.
2. Section 05 12 00 for structural metal fastenings.

1.2 RELATED DOCUMENTS

A. This specification supplements the requirements noted on the structural drawings.

1.3 REFERENCES

A. Abbreviations and Acronyms:
1. AESS: Architecturally Exposed Structural Steel.
2. AISC: American Institute of Steel Construction.
3. AWS: American Welding Society.

B. Definitions:
1. Fabricator: Means the AESS fabricator, unless otherwise indicated.
2. AESS Category 1: Pre-set fabrication and erection classification for high profile conditions that are within reach to touch and can be viewed in close proximity.
3. AESS Category 2: Pre-set fabrication and erection classification for high profile conditions that are out of reach to touch and can be viewed in close proximity within 20 feet.
4. AESS Category 3: Pre-set fabrication and erection classification for high profile conditions that are out of reach to touch and can be viewed from 20 feet or more.
5. AESS Standard: Pre-set fabrication and erection classification set forth in AISC publication, “Code of Standard Practice for Steel Buildings and Bridges”, Section 10 for AESS.

1.4 SUBMITTALS

A. Action Submittals: Submit the following for responsive action (formal review and approval).
1. Shop Drawings:
a. Submit dimensioned plans and elevations drawn to scale and showing AESS layout and types. Show locations, sizes, and extents of all items, accessories, and

trim. Label manufactured items by product name.

b. Include project-specific dimensioned details drawn to scale showing profiles, shapes, joints, seams, and dimensions, including coves, miters, and corner conditions. Cross-reference details to plans and elevations.

c. Indicate method of attaching, fastening, joining, adhering, and anchoring to adjacent construction.

d. Show backings, embedments, fasteners, brackets, clips, cleats, straps, mounting devices, and other attachments.

e. Label each attachment type; indicate manufacturer's product name for each manufactured item.

f. Indicate base material and finish, fastener material and finish, and material and finish of items being fastened or attached.

g. Label welds in conformance with the requirements of AWS publication A2.4, "*Standard Symbols for Welding, Brazing, and Nondestructive Examination*".

B. Informational Submittals: Submit the written descriptions confirming experience specified in QUALITY ASSURANCE article below for information (informal review: responsive action not expected or required, except to record non-conformance with submittal requirements).

1.5 QUALITY ASSURANCE

A. Quality Standard:

1. Fabrication and Erection Standard: Comply with the requirements indicated in AISC publication "*AESS Supplement" to "Modern Steel Construction*", May 2003 issue.
2. Welding Standards: Welding procedures must conform to the requirements of the following American Welding Society publications.
   a. AWS D1.1, "*Structural Welding Code – Steel*".
   b. AWS D1.3, "*Structural Welding Code – Sheet Steel*".
   c. AWS D19.0, "*Welding Zinc Coated Steel*".

B. Qualifications:

1. Fabricator: Company or individuals must have at least 10 years' experience fabricating AESS installed on at least 100 previous projects similar to this project in size, material, design, and complexity
2. Installer: Company or individuals must have at least 5 years' experience installing AESS for at least 30 previous projects similar to this project in size, material, design, and complexity.
3. Welders: Welding personnel and supervisors must comply with the "*Qualification*" requirements of AWS quality standard publications. Only certified welders current in their certification may perform or supervise any welding work.
4. Supervisors: Individuals must have at least 7 years' experience installing AESS for at least 30 previous projects similar to this project in size, material, design, and complexity, including at least 2 years' supervisory experience directing and leading AESS installers.

1.6 HANDLING

A. Receiving: Inspect all deliveries for deteriorated, damaged, and defective items.

1. Reject items that are not packaged in a manner that prevents damage; or that exhibit

deterioration or damage or have damaged or open packaging or containers.

2. Unload and store only inspected and accepted items.

B. Storage: Store unloaded items as shipped. Furnish adequate dunnage and bracing during storage.

1. Prevent stored items from contacting the floor or ground, from soiling and staining, and from deterioration and damage.
2. If items are not stored in an enclosed location, then cover the tops and sides with securely-tied, waterproof, and breathable covers. Unvented polyethylene tarpaulins do not qualify as breathable covers and are prohibited. (due to potential accumulation of moisture beneath tarpaulin during certain environmental conditions)
3. Incline covered items to ensure maximum drainage of accumulated moisture.
4. Do not leave items uncovered where they might be exposed to weather or become wet from rain, mist, relative humidity, condensation, frost, and other sources of moisture; or exposed to other sources of deterioration and damage.

C. Handling: Handle items in a manner that that prevents damage.

D. Damaged Item Replacement: Promptly remove and replace deteriorated, damaged, or defective AESS with undamaged new AESS that do not exhibit deterioration, damage, or defects.

E. Packaging Waste Management: Do not burn or bury construction waste at the project site. Remove and legally dispose of all construction waste away from the project site.

PART 2 - PRODUCTS

2.1 MATERIALS

A. Comply with the requirements Section 05 12 00 as amended by this specification Section.

2.2 ACCESSORIES

A. Flanges and Anchors: Unless otherwise indicated, provide cast or formed metal of the same type, material, and finish as the supported metal fabrications.

B. Grout:

1. Description: Pre-packaged, non-shrink, non-metallic, non-corrosive, non-staining, non-gaseous grout conforming to ASTM C 1107, Grade A (drypack) and Grades B and C (flowable grout) of a consistency suitable for application within a 30- minute working time.
2. Type: Grout specifically recommended by the manufacturer for interior and exterior applications.
3. Minimum 28-day Compressive Strength: At least 7,500 pounds per square inch.

C. Bituminous Paint:

1. Description: Cold-applied asphalt mastic conforming to SSPC publication PS 9.01, "*Cold-Applied Asphalt Mastic Painting System with Extra-Thick Film*" and containing no asbestos fibers; or cold-applied asphalt emulsion conforming to ASTM D 1187.
2. Application: Used for aluminum surfaces in contact with masonry, concrete, or steel.

D. Other Accessories: Provide accessories and secondary items normally furnished or necessary for a complete installation; or supplied, required, recommended, or accepted by the manufacturer for actual in-service conditions applicable to the project.

2.3 FABRICATION

A. General: Fabricate and assemble AESS in the shop to greatest extent possible.
   1. Detail AESS assemblies to minimize field handling and expedite erection.
   2. Design location of field joints in AESS assemblies to occur at concealed locations or where approved by Architect.
   3. Fabricate AESS with exposed surfaces smooth, square and of surface quality consistent with the approved mock up.
   4. Grind all edges of sheared, punched or flame-cut steel to match approved mockup, as determined by the Architect.
   5. Seal weld open ends of round and rectangular hollow structural section with 3/8-inch closure plates. Provide continuous, sealed welds at angle to gusset-plate connections and similar locations where AESS is exposed to weather.

B. Welding: Comply with the requirements of both AWS D1.1 and Section 05 12 00.
   1. Category 1 AESS:
      a. Welds Ground Smooth: Grind welds smooth. For groove welds, make weld flush to surface each side and within plus 1/16-inch and minus 0 inches of plate thickness.
      b. Contouring and Blending of Welds: Where fillet welds are indicated to be ground-contoured or blended, oversize welds as required and grind to provide smooth transition and to match profile on approved mock-up.
      c. Continuous Welds: Where welding is noted on the drawings, provide continuous welds of a uniform size and profile.
      d. Minimize Weld Show Through: At locations where welding on the far side of an exposed connection occurs, grind distortion and marking of the steel to a smooth profile with adjacent material.
   2. Category 2 AESS:
      a. Welds Ground Smooth: Grind welds smooth. For groove welds, make weld flush to surface each side and within plus 1/16-inch and minus 0 inches of plate thickness.
      b. Contouring and Blending of Welds: Where fillet welds are indicated to be ground-contoured or blended, oversize welds as required and grind to provide smooth transition and to match profile on approved mock-up.
      c. Minimize Weld Show Through: At locations where welding on the far side of an exposed connection occurs, grind distortion and marking of the steel to a smooth profile with adjacent material.
   3. Category 3 AESS: No additional requirements.

C. Mill Mark Removal:
   1. Category 1 AESS: Deliver steel free from stenciled, stamped, raised, or similar mill marks in exposed locations.
      a. Omit mill marks shall be by cutting mill material to appropriate lengths where possible.
      b. Where not possible, either fill and grind (stamped marks) or grind (raised marks) to a surface finish matching the approved mock up, as determined by the Architect.

2. Category 2 and Category 3: No additional requirements.

D. Piece Marks Hidden:
1. Applies to all AESS Categories: Fabricate AESS such that piece marks are either fully hidden when erected or made with such media to permit full removal after erection.

E. Minimized distortion of Rolled Members:
1. Applies to all AESS Categories:
a. Fully shape items indicated to be rolled to a final curved shape and tie during shipping to prevent stress relieving.
b. Distortion of the web or stem, and of outstanding flanges or legs of angles shall be visibly acceptable to the Architect from a distance of 20 feet under any lighting condition determined by the Architect.

F. Shop Connections: Applies to all AESS Categories.
1. Bolted Connections: Comply with the requirements of Section 05 12 00. Provide bolt type and finish as noted herein and align bolt heads as indicated on the approved shop erection drawings.
2. Welded Connections: Comply with AWS D1.1 and Section 05 12 00.
a. Assemble and weld built-up sections by methods that will maintain alignment of members without warp exceeding specified tolerances.
b. Appearance and quality of welds shall match approved mock up, as determined by the Architect.

G. Fabrication Tolerances:
1. Tolerances for Vertical and Horizontal Walls of Rectangular HSS Members after Rolling: Specified dimension plus or minus 1/2-inch.
2. Category 1 AESS: In addition to the requirement specified above, conform to the following.
a. General: Fabricate steel to one-half normal tolerance as specified in AISC publication “Code of Standard Practice for Steel Buildings and Bridges”, Section 10.
b. Coping and Blocking Tolerance: Maintain uniform gap of 1/8-inch plus or minus 1/32-inch at all copes and blocks.
c. Minimized Joint Gap Tolerance: Maintain uniform gap of 1/8-inch plus or minus 1/32-inch.

2.4 FINISHES

A. Shop Priming: Specified in Section 05 05 13.

PART 3 - EXECUTION

3.1 EXAMINATION

A. Oversight: Ensure an adequate number of supervisors are present and proper supervision practices are followed at the project site before the installer begins work and at all times during installation.

B. Verification: Verify that in-place construction conforms to the manufacturer’s requirements

or recommendations and satisfies all other conditions that might affect the quality of installation or the durability, appearance, or performance of installed items.

C. Evaluation and Assessment:

1. Identify project conditions that do not conform to the fabricator's instructions and other requirements and recommendations.
2. Perform or arrange and pay costs for all remedial work necessary to correct or improve deficient conditions, without limitation, before the installer begins work.

3.2 INSTALLATION

A. General Requirements:

1. Set AESS true to line, to required levels and lines, plumb, square, and cut and fitted without warp or rack; sloped or level as required; with flush well-fitted joints; and in alignment with adjacent construction.
2. Shim as required with concealed shims.
3. Dry-pack AESS supported on concrete and masonry to provide firm, level bearing surfaces.
4. Provide temporary bracing or anchors for items indicated as built into concrete, masonry, or similar construction.
5. Fit exposed connections accurately to form flush hairline joints

B. Special Techniques

1. Cutting:
   a. Splice members only where indicated.
   b. Do not enlarge unfair holes in members by burning or by using drift pins; ream holes that must be enlarged to admit bolts.
2. Bolted Connections:
   a. General: Install bolts as specified type Section 05 12 00.
   b. Bolt Head Orientation: Orient bolt heads as indicated on the contract documents.
3. Welded Connections:
   a. General: Comply with AWS D1.1 and Section 05 12 00.
      1) Weld profile, quality, and finish must match mock-ups approved prior to fabrication as determined by Architect. Obtain Architect approval for appearance of welds in repaired or field modified work.
      2) Assemble and weld built-up sections by methods that maintain true alignment of axes without warp.
      3) Verify weld sizes, fabrication sequence, and equipment used for AESS will limit distortions to allowable tolerances.
   b. Finishing of Welds:
      1) Welds Ground Smooth: Grind welds smooth. For groove welds, make weld flush to surface each side and within plus 1/16-inch and minus 0 inches of plate thickness.
      2) Contouring and Blending of Welds: Where fillet welds are indicated to be ground-contoured or blended, oversize welds as required and grind to provide smooth transition and to match profile on approved mock-up.
      3) Continuous Welds: Where welding is noted on the drawings, provide continuous welds of a uniform size and profile.

4) Minimize Weld Show Through: At locations where welding on the far side of an exposed connection occurs, grind distortion and marking of the steel to a smooth profile with adjacent material.

c. Removal of Field Connection Aids: Removed run-out tabs, erection bolts and other steel members added to connections to allow for alignment, fit-up, and welding in the field.

1) Select field groove welds to eliminate the need for backing bars or to permit their removal after welding.

2) Remove welds at run-out tabs to match adjacent surfaces and ground smooth.

3) Plug weld holes for erection bolts and grind smooth.

4) Filling of Weld Access Holes at Full Pen Welds: Fill holes cut in webs at the intersection with flanges on W shapes and structural tees to permit field welding of the flanges. Follow proper procedures to minimize restraint and address thermal stresses in group 4 and 5 shapes.

C. Interface with Adjacent Items:

1. Attachment: Provide materials, components, and accessories normally furnished or necessary to securely attach AESS to supporting construction.

2. Field Welding:

a. Comply with AWS quality standard publications for manual shielded arc welding procedures, appearance and quality of welds, and methods to correct faulty welds.

b. Use materials and methods that minimize distortion and develop strength and corrosion resistance of base metals.

c. Before welding, grind to remove zinc coating from one to 4 inches from either side of the intended weld zone and on both sides of the item.

d. Obtain fusion without undercut or overlap.

e. Promptly remove welding flux.

f. At exposed connections, finish exposed welds and surfaces smooth and blended so no roughness shows after finishing and contour of welded surface matches that of adjacent surface.

g. Field-weld connections indicated as exposed joints but cannot be shop-welded because of shipping size limitations.

h. Welds remaining exposed must be ground smooth and flush to match and blend with parent metal surfaces.

i. Clean field welds, weld spatter, bolted connections, and abraded areas promptly after installation.

D. Installation Tolerances: Install AESS in conformance with the requirements of standard frame tolerances for structural steel specified in AISC publication "*Code of Standard Practice for Steel Buildings and Bridges*", Section 10.

3.3 CORRECTION AND REPAIR

A. Non-conforming, damaged, and defective work must be brought into conformance with the Contract Documents. Correct and repair as necessary, without limitation, including arranging all correction and repair work and paying all correction and repair costs, until accepted in writing by the Architect.

B. Corrective and repair work must be performed in conformance with a correction and repair

plan submitted to and accepted in writing by the Architect before correction or repair work begins. At a minimum, correction and repair plans must include

1. written descriptions of non-conforming, damaged, and defective work;
2. supporting sketches, diagrams, photographs, and other visual depictions of non-conforming, damaged, and defective work; and
3. similar written descriptions and visual depictions of Contractor-proposed corrections and repairs.

C. Arrange and pay costs for removing and replacing work that cannot be corrected or repaired to the Architect's acceptance.

D. Damaged Primer Touchup: Clean and prepare damaged primed surfaces in conformance with manufacturer's published instructions and SSPC surface preparation standard SSPC-SP11 "*Power Tool Cleaning to Bare Metal*".

1. Sand smooth and re-clean.
2. Spot-prime bare metal surfaces with specified primer applied to a total spot primer DFT of at least 5 mils.
3. Overlap undamaged primer areas with spot primer at least 2 inches.

3.4 CLEANING

A. Waste Management: After completing the work of this specification section, leave work areas free from debris, waste, scrap, equipment, tools, and other items.

END OF SECTION

SECTION 05 31 00
FLOOR METAL DECKING

PART 1 - GENERAL

1.1 RELATED DOCUMENTS

A. Drawings and general provisions of the Contract, including General and Supplementary Conditions and Division 01 Specification Sections, apply to this Section.

1.2 SUMMARY

A. This Section includes the following:

1. Composite floor deck.
2. Vented form deck.

B. Related Sections include the following:

1. Division 03 Section "Cast-in-Place Concrete" for concrete fill.
2. Division 05 Section "Metal Fabrications" for framing deck openings with miscellaneous steel shapes.

1.3 SUBMITTALS

A. Product Data: For each type of deck, accessory, and product indicated.

B. Shop Drawings: Show layout and types of deck panels, anchorage details, reinforcing channels, pans, cut deck openings, special jointing, accessories, and attachments to other construction.

C. Product Certificates: For each type of steel deck, signed by product manufacturer.

D. Welding certificates.

E. Field quality-control test and inspection reports.

F. Product Test Reports: Based on evaluation of comprehensive tests performed by a qualified testing agency, indicating that each of the following complies with requirements:

1. Power-actuated mechanical fasteners.
2. Acoustical roof deck.

G. Research/Evaluation Reports: For steel deck.

1.4 QUALITY ASSURANCE

A. Testing Agency Qualifications: An independent agency, acceptable to HCAI, qualified according to ASTM E 329 for testing indicated.

B. Welding: Qualify procedures and personnel according to AWS D1.3, "Structural Welding Code - Sheet Steel."

C. Fire-Test-Response Characteristics: Where indicated, provide steel deck units identical to those tested for fire resistance per ASTM E 119 by a testing and inspecting agency acceptable to authorities having jurisdiction.

1. Fire-Resistance Ratings: Indicated by design designations of applicable testing and inspecting agency.
2. Steel deck units shall be identified with appropriate markings of applicable testing and inspecting agency.

D. AISI Specifications: Comply with calculated structural characteristics of steel deck according to AISI's "North American Specification for the Design of Cold-Formed Steel Structural Members."

E. FMG Listing: Provide steel roof deck evaluated by FMG and listed in its "Approval Guide, Building Materials" for Class 1 fire rating and Class 1-90 windstorm ratings.

1.5 DELIVERY, STORAGE, AND HANDLING

A. Protect steel deck from corrosion, deformation, and other damage during delivery, storage, and handling.

B. Stack steel deck on platforms or pallets and slope to provide drainage. Protect with a waterproof covering and ventilate to avoid condensation.

1. Protect and ventilate acoustical cellular roof deck with factory-installed insulation to maintain insulation free of moisture.

1.6 COORDINATION

A. Coordinate installation of sound-absorbing insulation strips in topside ribs of acoustical deck with roofing installation specified in Division 07 Section “” to ensure protection of insulation strips against damage from effects of weather and other causes.

PART 2 - PRODUCTS

2.1 MANUFACTURERS

A. Available Manufacturers: Subject to compliance with requirements, manufacturers offering products that may be incorporated into the Work include, but are not limited to, the following:

1. Steel Deck:

a. ASC Profiles, Inc.
b. Verco Manufacturing Co.

2.2 COMPOSITE FLOOR DECK

A. Composite Steel Floor Deck: Fabricate panels, with integrally embossed or raised pattern ribs and interlocking side laps, to comply with "SDI Specifications and Commentary for

Composite Steel Floor Deck," in SDI Publication No. 30, with the minimum section properties indicated, and with the following:

1. Prime-Painted Steel Sheet: ASTM A 1008 / A 1039, Structural Steel (SS), Grade 50 minimum, with top surface phosphatized and unpainted and underside surface shop primed with manufacturers' standard gray or white baked-on, rust-inhibitive primer.

2. Galvanized and Shop-Primed Steel Sheet: ASTM A 653 / A 1063, Structural Steel (SS), Grade 50, G60 zinc coating; cleaned, pretreated, and primed with manufacturer's standard baked-on, rust-inhibitive primer.
   a. Color: Manufacturer's standard. Verify availability of aluminum-zinc alloy-coated steel sheet with deck manufacturers. Revise steel grade and coating weight, if required, to suit Project.
3. Profile Depth: As indicated in Drawings.
4. Design Uncoated-Steel Thickness: As indicated in Drawings.
5. Span Condition: Triple span or more where possible.

2.3 ACCESSORIES

A. General: Provide manufacturer's standard accessory materials for deck that comply with requirements indicated.

B. Mechanical Fasteners: Corrosion-resistant, low-velocity, power-actuated or pneumatically driven carbon-steel fasteners; or self-drilling, self-threading screws.

C. Side-Lap Fasteners: Corrosion-resistant, hexagonal washer head; self-drilling, carbon-steel screws, No. 10 minimum diameter.

D. Flexible Closure Strips: Vulcanized, closed-cell, synthetic rubber.

E. Miscellaneous Sheet Metal Deck Accessories: Steel sheet, minimum yield strength of 50,000 psi, not less than 0.0359-inch design uncoated thickness, of same material and finish as deck; of profile indicated or required for application.

F. Pour Stops and Girder Fillers: Steel sheet, minimum yield strength of 33,000, of same material and finish as deck, and of thickness and profile recommended by SDI Publication No. 30 for overhang and slab depth.

G. Column Closures, End Closures, Z-Closures, and Cover Plates: Steel sheet, of same material, finish, and thickness as deck, unless otherwise indicated.

H. Weld Washers: Uncoated steel sheet, shaped to fit deck rib, 0.0747 inch thick, with factory-punched hole of 3/8-inch minimum diameter.

I. Recessed Sump Pans: Single-piece steel sheet, 0.0747 inch thick, of same material and finish as deck, with 3-inch- wide flanges and level recessed pans of 1-1/2-inch minimum depth. For drains, cut holes in the field.

J. Flat Sump Plate: Single-piece steel sheet, 0.0747 inch thick, of same material and finish as deck. For drains, cut holes in the field.

K. Galvanizing Repair Paint: ASTM A 780 SSPC-Paint 20 or DOD-P-21035, with dry film containing a minimum of 94 percent zinc dust by weight.

L. Repair Paint: Manufacturer's standard rust-inhibitive primer of same color as primer.

PART 3 - EXECUTION

3.1 EXAMINATION

A. Examine supporting frame and field conditions for compliance with requirements for installation tolerances and other conditions affecting performance.

3.2 INSTALLATION, GENERAL

A. Install deck panels and accessories according to applicable specifications and commentary in SDI Publication No. 30, manufacturer's written instructions, and requirements in this Section.

B. Install temporary shoring before placing deck panels, if required to meet deflection limitations.

C. Locate deck bundles to prevent overloading of supporting members.

D. Place deck panels on supporting frame and adjust to final position with ends accurately aligned and bearing on supporting frame before being permanently fastened. Do not stretch or contract side-lap interlocks.

1. Align cellular deck panels over full length of cell runs and align cells at ends of abutting panels.

E. Place deck panels flat and square and fasten to supporting frame without warp or deflection.

F. Cut and neatly fit deck panels and accessories around openings and other work projecting through or adjacent to deck.

G. Provide additional reinforcement and closure pieces at openings as required for strength, continuity of deck, and support of other work.

H. Comply with AWS requirements and procedures for manual shielded metal arc welding, appearance and quality of welds, and methods used for correcting welding work.

I. Mechanical fasteners may be used in lieu of welding to fasten deck. Locate mechanical fasteners and install according to deck manufacturer's written instructions.

3.3 ROOF-DECK INSTALLATION

A. Fasten roof-deck panels to steel supporting members by arc spot (puddle) welds of the surface diameter indicated or arc seam welds with an equal perimeter that is not less than 1-1/2 inches long, and as follows:

1. Weld Diameter: 3/4 inch, nominal.
2. Weld Spacing: Weld edge and interior ribs of deck units with a minimum of two welds per deck unit at each support. Space welds 18 inches apart, maximum unless otherwise indicated in Drawings.
3. Weld Washers: Install weld washers at each weld location where deck thickness is less than 18 gauge.

B. Side-Lap and Perimeter Edge Fastening: Fasten side laps and perimeter edges of panels between supports, at intervals not exceeding the lesser of 1/2 of the span or 18 inches unless otherwise indicated in the Drawings, and as follows:

1. Mechanically fasten with self-drilling, No. 10 diameter or larger, carbon-steel screws.
2. Mechanically clinch or button punch.
3. Fasten with a minimum of 1-1/2-inch-long welds.

C. End Bearing: Install deck ends over supporting frame with a minimum end bearing of 1-1/2 inches, with end joints as follows:

1. End Joints: Lapped 2 inches minimum or butted at Contractor's option.

D. Roof Sump Pans and Sump Plates: Install over openings provided in roof deck and weld or mechanically fasten flanges to top of deck. Space welds or mechanical fasteners not more than 12 inches apart with at least one weld or fastener at each corner.

1. Install reinforcing channels or zees in ribs to span between supports and weld or mechanically fasten.

E. Miscellaneous Roof-Deck Accessories: Install ridge and valley plates, finish strips, end closures, and reinforcing channels according to deck manufacturer's written instructions. Weld or mechanically fasten to substrate to provide a complete deck installation.

1. Weld cover plates at changes in direction of roof-deck panels, unless otherwise indicated.

F. Flexible Closure Strips: Install flexible closure strips over partitions, walls, and where indicated. Install with adhesive according to manufacturer's written instructions to ensure complete closure.

3.4 FLOOR-DECK INSTALLATION

A. Fasten floor-deck panels to steel supporting members by arc spot (puddle) welds of the surface diameter indicated and as follows:

1. Weld Diameter: 3/4-inch, nominal.
2. Weld Spacing: Weld edge ribs of panels at each support. Space additional welds an average of 12 inches apart, but not more than 18 inches apart.
3. Weld Spacing: Space and locate welds as indicated.

B. Side-Lap and Perimeter Edge Fastening: Fasten side laps and perimeter edges of panels between supports, at intervals not exceeding the lesser of half of the span or 36 inches, and as follows:

1. Mechanically fasten with self-drilling, No. 10 diameter or larger, carbon-steel screws.
2. Mechanically clinch or button punch.
3. Fasten with a minimum of 1-1/2-inch- long welds.

C. End Bearing: Install deck ends over supporting frame with a minimum end bearing of 2 inches with end joints as follows:

1. End Joints: Lapped or butted at Contractor's option.

D. Pour Stops and Girder Fillers: Weld steel sheet pour stops and girder fillers to supporting structure according to SDI recommendations, unless otherwise indicated.

E. Floor-Deck Closures: Weld steel sheet column closures, cell closures, and Z-closures to deck, according to SDI recommendations, to provide tight-fitting closures at open ends of ribs and sides of deck.

3.5 FIELD QUALITY CONTROL

A. Testing Agency: Owner will engage a qualified independent testing and inspecting agency approved by HCAI to perform field tests and inspections and prepare test reports.

B. Field welds and/or mechanical fastening will be subject to inspection.

C. Testing agency will report inspection results promptly and in writing to Contractor and Architect.

D. Remove and replace work that does not comply with specified requirements.

E. Additional inspecting, at Contractor's expense, will be performed to determine compliance of corrected work with specified requirements.

3.6 REPAIRS AND PROTECTION

A. Galvanizing Repairs: Prepare and repair damaged galvanized coatings on both surfaces of deck with galvanized repair paint according to ASTM A 780 and manufacturer's written instructions.

B. Repair Painting: Wire brush and clean rust spots, welds, and abraded areas on both surfaces where accessible of prime-painted deck immediately after installation, and apply repair paint.

1. Apply repair paint, of same color as adjacent shop-primed deck, to bottom surfaces of deck exposed to view.
2. Wire brushing, cleaning, and repair painting of bottom deck surfaces are included in Division 09 Section “Painting."

C. Repair Painting: Wire brushing, cleaning, and repair painting of rust spots, welds, and abraded areas of both deck surfaces are included in Division 09 Section “Painting”. Provide final protection and maintain conditions to ensure that steel deck is without damage or deterioration at time of Substantial Completion.

END OF SECTION

SECTION 05 40 00

COLD-FORMED METAL FRAMING

PART 1 - GENERAL

1.1 SUMMARY

A. Section Includes:
1. Furring
2. Stud framing.
3. Specialty framing.
4. Connectors.
5. Wall backings.
6. Slot metal channel framing.
7. Supplementary components and accessories normally furnished or necessary for a complete installation, whether or not such items are indicated on the Drawings or included in the Specifications.

B. Related Requirements:
1. Section 09 00 11 for gypsum shaft wall framing.
2. Section 09 00 10 for lightgage metal framing.
3. Section 09 51 13 for metal suspension systems.

1.2 REFERENCES

A. Abbreviations and Acronyms:
1. AISI: American Iron and Steel Institute.
2. AWS: American Welding Society.
3. BMT: Base Metal Thickness.msg
4. MSG: Manufacturer’s Standard Gage for Sheet Steel.
5. HDG: Hot Dip Galvanized.

B. Definitions:
1. Manufacturer: Means the metal framing manufacturer, unless otherwise indicated.
2. Metal Framing: Means cold-formed metal framing.
3. Gage: Means the thickness of sheet metal based on weight measured in pounds per square foot per inch of thickness. For the purposes of this specification, gages are classified the Table below. Minimum thickness indicated in the first column is equivalent to 95 percent of the design thickness and is the minimum acceptable thickness of base metal delivered to the project site.
4. Manufacturers' Standard Gage for Sheet Metal: Means the steel sheet thickness based on a weight of 41.82 pounds per square foot per inch of thickness.

5. Base Metal Minimum Thickness: Means the thickness of sheet steel material without any coatings.
6. Lightgage Metal Framing: Means metal framing members having a BMT of 30 mils

BMT (MSG 20) or less and installed in non-load bearing interior construction assemblies typically supporting plaster or gypsum board.

7. Cold-Formed Metal Framing: Means metal framing members having a BMT range of between 118 mils BMT (MSG 10) and 33 mils BMT (MSG 20) and installed in transverse or axial load-bearing applications, or in non-load bearing interior construction assemblies typically supporting plaster or gypsum board.

Cold-Formed Metal Framing specified in this specification Section		
20	33	0.0346
18	43	0.0451
16	54	0.0566
14	68	0.0713
12	97	0.1017
10	118	0.1242

1.3 ADMINISTRATIVE REQUIREMENTS

A. Delegated Design Requirements:

1. Engineer, fabricate, assemble, and install framing that conforms to the profiles indicated and other Contract Document requirements; meets specified performance criteria; and results in structurally sound, non-corroding, and weathertight assemblies that accommodate, resist, distribute, or transfer in-service loads without incipient or catastrophic failure.
2. Maintain visual design concept indicated, including sizes, profiles, and alignments. Deviation from visual design concept is non-conforming work and prohibited without prior written acceptance by the Architect.

B. Performance Requirements:

1. Exterior Wall Design Pressure: Calculate in conformance with American Society of Civil Engineers/ Structural Engineering Institute publication ASCE/SEI 7, "*Minimum Design Loads and Associated Criteria for Buildings and other Structures*".
2. Interior Partition Uniformly Distributed Lateral Live Load: At least 10 pounds per square foot.
3. Superstructure Displacement:
   a. Vertical Displacement of Adjacent Stories (Live Load Deflection): Allow for at least 3/4-inch vertical live load structure deflection, unless otherwise indicated on the structural drawings and general notes.
   b. Horizontal Displacement of Adjacent Stories (Interstory Drift): Accommodate design displacement of adjacent stories indicated on the structural drawings and general notes.
4. Seismic Loads: Resist, distribute, or transfer seismic loads indicated on the structural drawings without incipient or catastrophic failure.
5. Perpendicular Deflection (Convexity and Concavity): Framing members may not deflect more than shown in California Building Code Table 1604A.3 or the following, whichever is less, measured normal to the assembly plane. Limit asymmetric wall construction deflection to the most stringent requirement that applies to the assembly.

a. Construction Supporting Masonry: Not more than L/360.
b. Construction Supporting Stone: Not more than L/960.
c. Construction Supporting Wall Panels: Not more than L/180.
d. Construction Supporting Plaster: Not more than L/360.
e. Construction Supporting Gypsum Board: Not more than L/240.
f. Construction Supporting Tile: Not more than L/360.

6. Thermal Expansion and Contraction: Accommodate movement resulting from at least 120 deg. F ambient and 180 deg. F material surface temperature differentials. (changes)
7. Dissimilar Metal Corrosion Protection: Permanently isolate metal surfaces from direct contact with incompatible materials and other potentially corrosive substrates as specified in Section 05 50 00.

1.4 SUBMITTALS

A. Action Submittals: Submit the following for responsive action (formal review and approval).
   1. Product Data: Submit manufacturer's product data, specifications, and all other information necessary to show conformance to the Contract Documents, excluding material safety data sheets (MSDSs), which are returned to the Contractor without review or responsive action.
   2. Shop Drawings: Include project-specific dimensioned details drawn to scale showing framing conditions not detailed on the product data; or that are detailed, but not in a manner specific to the project.

B. Informational Submittals: Submit the following for information (informal review: responsive action not expected or required, except to record non-conformance with submittal requirements).
   1. Manufacturer's Instructions: Submit manufacturer-prepared published instructions for proper installation of furnished framing.
      a. If manufacturer's instructions are unavailable or do not apply to specific project conditions, then consult the manufacturer's representative and obtain project-specific supplemental instructions printed on manufacturer's letterhead.
      b. Promptly distribute supplemental instructions to the Architect, who may have comments that lead to contract modifications or minor changes in the work.
   2. Delegated Design Submittals: Together with shop drawings, submit engineering calculations demonstrating conformance to the Contract Documents and all impacts of delegated design scope of work on other work.
      a. Calculations must be explicit and legible and must incorporate distinct cross-references to submitted shop drawings in sufficient quantity to render the calculations readily intelligible and reviewable.
      b. At a minimum, calculations must include design loads; analysis of supporting construction, including section-property computations; analysis of fasteners, anchors, attachments, and connectors; and signature and seal of the licensed professional engineer responsible for preparing them.
      c. Test reports are not an acceptable substitute for calculations and are returned to the Contractor without review or responsive action, except to record non-conformance with this requirement.
   3. Qualification Statements: Submit written descriptions confirming experience specified in QUALITY ASSURANCE article below.

1.5 QUALITY ASSURANCE

A. Source Limitations:

1. Framing must be obtained through one source from the same manufacturer (to ensure compatibility, regulatory conformance, and a warrantable installation).
   a. Certain items may be obtained from more than one manufacturer, but only when used for separate installations.
   b. Items provided for each different installation must be obtained from the same source and manufacturer.
2. Provide secondary materials, components, accessories and other items from sources required, recommended, or accepted by the primary manufacturer for actual in- service conditions applicable to the project.

B. Quality Standards:

1. Comply with all requirements of the California Building Code (CBC).
2. Comply with the requirements AISI publications S100, "*North American Specification for the Design of Cold-Formed Steel Structural Members"* and SG03 "*Cold-Formed Steel Design Manual"* for cold-formed steel framing design.
3. Comply with the requirements of AISI publication, "*Standard for Cold-Formed Steel Framing - General Provisions"*.
4. Comply with the requirements of AISI publication, *"Standard for Cold-Formed Steel Framing - Header Design"*.

C. Qualifications:

1. Installer: Company or individuals must have at least 5 years' experience installing framing for at least 30 previous projects similar to this project in size, material, design, and complexity.
2. Welders: Welding personnel and supervisors must comply with, and welding procedures must conform to, the "*Qualification*" requirements of American Welding Society publications AWS D1.3, "*Structural Welding Code – Sheet Steel*" and AWS D19.0, "*Welding Zinc Coated Steel*" applicable to the project. Only certified welders current in their certification may perform or supervise any welding work.
3. Supervisors: Individuals must have at least 7 years' experience installing framing for at least 30 previous projects similar to this project in size, material, design, and complexity, including at least 2 years' supervisory experience directing and leading framing installers.
4. Engineer: Must be a licensed professional structural engineer registered to practice in California having at least 10 years' experience performing the kind of engineering services indicated for at least 20 previous projects similar to this project in size, material, design, and complexity.

D. Mockups: If an *ex-situ* exterior wall integrated mockup is required for this project, then integrate framing into the mockup as part of the work of this specification section.

1.6 HANDLING

A. Receiving: Inspect all deliveries for deteriorated, damaged, and defective items.

1. Reject items that are not packaged in a manner that prevents damage; or that exhibit deterioration or damage or have damaged or open packaging or containers.
2. Unload and store only inspected and accepted items.

B. Storage: Store unloaded items as shipped and in conformance with manufacturer's instructions and other requirements and recommendations for storage. Furnish adequate dunnage and bracing during storage.
   1. Prevent stored items from contacting the floor or ground, from soiling and staining, and from deterioration and damage.
   2. If items are not stored in an enclosed location, then cover the tops and sides with securely-tied, waterproof, and breathable covers. Unvented polyethylene tarpaulins do not qualify as breathable covers and are prohibited. (due to potential accumulation of moisture beneath tarpaulin during certain environmental conditions)
   3. Incline covered items to ensure maximum drainage of accumulated moisture.
   4. Do not leave items uncovered where they might be exposed to weather or become wet; or exposed to other sources of deterioration and damage.

C. Handling: Handle items in conformance with manufacturer's instructions and other requirements and recommendations, and in a manner that that prevents damage.

D. Damaged Item Replacement: Promptly remove and replace deteriorated, damaged, or defective framing with undamaged new framing that does not exhibit deterioration, damage, or defects.

E. Packaging Waste Management: Do not burn or bury construction waste at the project site. Remove and legally dispose of all construction waste away from the project site.

PART 2 - PRODUCTS

2.1 MANUFACTURERS

A. Manufacturers: Provide products manufactured by one of the following, or equal.
   1. California Expanded Metal Products Co. (CEMCO)
   2. ClarkDietrich Building Systems.
   3. Olmar Supply Inc.
   4. SCAFCO Corp.
   5. The Steel Network, Inc. (TSN)

2.2 MATERIALS

A. HDG Metallic-Coated Steel Sheet for Cold-Formed Framing: ASTM A 1003, ST50 (Structural Grade 50), with at least a G60 coating weight designation (mass designation) on both surfaces with equal coating weight on each surface.

2.3 FURRING

A. Hat Furring Channels:
   1. Products: Provide one of the following, or equal.
      a. "FC Series Furring Channel" manufactured by ClarkDietrich Building Systems.
      b. "Prime Wall Furring Channel" manufactured by The Steel Network.
   2. Requisite Properties:
      a. Depth: 7/8- or 1-1/2-inch deep channels, as indicated.
      b. Thickness: 43 mils (18-gage).

c. Web: 1-1/4 inches wide.
d. Screw Flanges: 3/4-inch wide.

B. Z-shaped Furring Channels:
1. Products: Provide one of the following, or equal.
a. "Z-Furring (ZF-Series)" manufactured by ClarkDietrich Building Systems.
b. "Prime Wall Resilient Channel (RC1)" manufactured by The Steel Network.
2. Requisite Properties:
a. Depth: One to 3 inches deep, as indicated.
b. Thickness: 43 mils (18-gage).
c. Screw Flanges: 1-1/4 inches wide.

2.4 STUD FRAMING

A. Studs:
1. Description: Pre-punched roll-formed C-shaped framing members with manufacturer's standard knockout sizing and spacing.
2. Product: Provide "Structural Stud S162 (CSJ)" manufactured by ClarkDeitrich Building Systems, or equal.
3. Requisite Properties:
a. Depth: Indicated on the Drawings.
b. Thickness: At least 54 mils (16-gage).
c. Flanges: 1-5/8-inch wide stiffened flanges with at least 1/2-inch returns (lip).

B. Tracks (Top and Bottom Runners):
1. Description: Un-punched roll-formed U-shaped runners manufactured from the same material to corresponding stud sizes and gages.
2. Product: Provide "Structural Track" manufactured by ClarkDeitrich Building Systems, or equal.
3. Requisite Properties:
a. Depth: Indicated on the Drawings.
b. Thickness: At least 54 mils (16-gage).
c. Flanges: At least 1-1/2-inch wide unstiffened flanges.

C. Deflection Track Systems:
1. Description: Slotted roll- or brake-formed track installed in head-of-wall deflection conditions to accommodate vertical movement caused by normal head-of-wall and floor extension or compression.
2. Product: Provide one of the following, or equal.
a. "MaxTrack" slotted deflection track or "BlazeFrame" fire stop deflection track manufactured by ClarkDietrich Building Systems.
b. "CEMCO Slotted Track (CST)" manufactured by CEMCO.

D. Manufactured Bridging Channels:
1. Description: Roll-formed channel- or L-shaped stiffeners with pre-notched slots installed in both load-bearing and non-load bearing walls to help resist stud twisting.
2. Products: Provide one of the following, or equal.

a. “Spazzer 5400” manufactured by ClarkDietrich Building Systems.
b. “BridgeBar 150” manufactured by The Steel Network.

3. Requisite Properties:
   a. Size: 1-1/2-inch wide by 1/2-inch deep.
   b. Thickness: At least 54 mils (16-gage).

4. Bridging Clips: Provide one of the following from the selected bridging channel manufacturer.
   a. “Spazzer Bar Guard” manufactured by ClarkDietrich Building Systems.
   b. “BridgeClip”, “BC600”, or “BC800” manufactured by The Steel Network.

5. Alternative Bridging Clips: As an alternate to manufactured bridging clips, 1-1/2-inch wide by 1/2-inch deep by full stud width cold-rolled angle clips manufactured from at least 54-mil (16-gage) base metal thickness HDG metallic-coated steel sheet may be provided.

E. Cold Rolled Channel (CRC) Bridging:
1. Description: Un-punched roll-formed U-shape stiffeners installed in both load-bearing and non-load bearing walls to help resist stud twisting.
2. Requisite Properties:
   a. Size: 1-1/2-inch wide by 1/2-inch deep.
   b. Thickness: At least 54 mils (16-gage).
   c. Flanges: 1-1/2 inches wide unstiffened flanges.
3. Manufactured Bridging Clips: Provide one of the following, or equal.
   a. “EasyClip U-, B-, or X-Series Clip Angles” manufactured by ClarkDietrich Building Systems.
   b. “BridgeClip”, “BC600”, or “BC800” manufactured by The Steel Network.

F. Flat Strap Bridging (Strapping):
1. Application: Flat sheet installed to provide resistance to stud rotation and minor axis buckling under loads for studs deeper than 6 inches.
2. Requisite Properties:
   a. Width: Between 2 and 20 inches, as indicated or necessary.
   b. Thickness: At least 54 mils (16-gage).

G. Built-Up Headers:
1. Built-Up Curtain Wall Headers: Un-punched roll-formed C-shaped framing members and U-channel runners.
2. Load-Bearing Box Beam Headers: Un-punched roll-formed C-shaped framing members.
3. Requisite Properties:
   a. Depth: Indicated on the Drawings.
   b. Thickness: At least 54 mils (16-gage).
   c. Flanges: 1-5/8-inch wide stiffened flanges with at least 1/2-inch returns (lip).
4. Header Connectors:
   a. Description: Connectors to attach either beams to columns or headers to jambs.
   b. Product: Provide “DROP'N LOCK CLIP” connectors manufactured by ClarkDietrich Building Systems, or equal.

2.5 JOIST FRAMING

A. Ceiling Joists:
1. Description: Un-punched roll-formed C-shaped framing members.
2. Product: Provide “Structural Stud S162 (CSJ)” manufactured by ClarkDeitrich Building Systems, or equal.
3. Requisite Properties:
a. Depth: Indicated on the Drawings.
b. Thickness: At least 54 mils (16-gage).
c. Flanges: 1-5/8-inch wide stiffened flanges with at least 1/2-inch returns (lip).

2.6 SPECIALTY FRAMING

A. KCS Studs (King Kong Studs):
1. Description: Pre-punched C-shaped framing members with manufacturer’s standard knockout sizing and spacing.
2. Requisite Properties:
a. Depth: Indicated on the Drawings.
b. Thickness: At least 54 mils (16-gage).
c. Flanges: 3-inch wide stiffened flanges with at least 7/8-inch returns (lip).

B. Manufactured Headers:
1. Description: One- or 2-piece pre-engineered header with associated inserts and clips.
2. Products: Provide one of the following, or equal.
a. “RedHeader RO Rough Opening System” manufactured by ClarkDietrich Building Systems.
b. “Pro-X” manufactured by Brady Construction Innovations, Inc.

C. Corner Angles:
1. Description: Utility angles installed as a connection strut or angle, as corner reinforcement, or other various framing applications.
2. Requisite Properties:
a. Thickness: At least 30 mils (20-gage).
b. Legs: 2- or 3-inch wide legs, as indicated, unless a wider or uneven leg size is explicitly indicated; or is otherwise supplied, required, recommended, authorized, or accepted by the manufacturer.

2.7 WALL BACKINGS

A. Metal Wall Backings:
1. Description: General multipurpose flat sheet and formed metal stock used as backing to support shelves, cabinets, fixtures or handrails when applied to framing. Provide wall backing in addition to, not as a replacement for, tension strapping or cross bracing.
2. Heavy-Duty Backing: Installed to support items distributing not more than 80 pounds per stud.
a. Material: 6-inch wide un-punched U-shaped runners manufactured from minimum 54-mil (16-gage) base metal thickness HDG metallic-coated steel sheet.
1) Provide individual runner in lengths long enough to span across at least 3

studs.

2) Notch and bend track legs so that backing plate will be flush with exterior face of stud.
3) Do not cut track legs between supporting studs.
4) Fasten backing track to each stud with minimum 3 screw fasteners per stud.

3. Medium-Duty Backing: Installed to support items distributing not more than 20 pounds per stud.
   a. Material: Minimum 6-inch wide un-punched U-shaped runners manufactured from minimum 54-mil (16-gage) base metal thickness HDG metallic-coated steel sheet.
   b. Providual Individual runner in lengths long enough to span across a 2 studs minimum.
   c. Fasten backing track to each stud with minimum 3 screw fasteners per stud.
4. Light-Duty Backing: Installed to support items distributing not more than 5 pounds per stud.
   a. Backing Material: Minimum 6-inch wide backing strip manufactured from minimum 54-mil (16-gage) base metal thickness HDG metallic-coated steel sheet.
      1) Providual Individual runner in lengths long enough to span across a 3 studs minimum.
      2) Fasten backing track to each stud with minimum one screw fasteners per stud.

2.8 SLOT CHANNEL (STRUT) FRAMING

A. Description: Continuous slot-channel metal framing complying with MFMA-4, and associated fittings and hardware necessary for supporting cable trays, conduit, pipes and similar items.

B. Material: At least 0.0747-inch base metal thickness (MSG 14) HDG metallic-coated steel sheet complying with ASTM A 653, structural steel (SS), Grade 33 or better, at least a G90 zinc coating designation on both surfaces with equal coating weight on each surface.

C. Manufacturers: Provide products manufactured by one of the following, or equal.
   1. Flex-Strut, Inc.
   2. PHD Manufacturing, Inc.
   3. Unistrut Corp.

D. Product: Provide “P300 SL” slotted channels manufactured by Unistrut Corp., or equal.

E. Requisite Properties:
   1. Type: Standard and welded combination channels as required by conditions of installation and service.
   2. Height: Provide heights as required by engineering calculations to meet load capacities, but not less than 1-3/8 inches.
   3. Suspension System: Hot-dip galvanized coarse-threaded (UNC) carbon steel rods having diameters as required by engineering calculations to meet load capacities, but not less than 3/8-inch.

F. Accessories: Provide kickers, perimeter angle pieces and other accessories as supplied, required, recommended, or accepted by the slotted channel framing manufacturer and

necessary for a complete and structurally-sound installation.

G.

H. Finish: Chemically treated where scheduled to retain natural zinc finish and bonderized where painted finish is indicated.

2.9 ACCESSORIES

A. Sill Sealer and Liner Gaskets:

1. Description: Self-adhering closed cell polyethylene foam air and moisture barrier.
2. Applications:
   a. Sill Sealer: Install on the top of foundation wall, slab-on-grade. or curbs beneath exterior wall runner track or sill plates.
   b. Plate Liner: Install between floor deck and interior wall runner track or sill plates at shafts, hoistways, and other locations where necessary or indicated.
3. Products: Provide the following products manufactured by Protecto Wrap Co.
   a. Sill Sealer: 3/8-inch thick “Protecto Triple Guard Energy Sill Sealer”, or equal.
   b. Plate Liner: 1/4-inch thick “Protecto Energy Plate Liner”, or equal.

B. Shims: Load bearing, non-leaching, high-density multimonomer plastic.

C. Screw Fasteners: Provide #8- and #10-32 UNC 2B (0.164- and 0.190-inch shank diameter, 32 threads per inch) manufactured by at least one-inch long, pan head, coarse thread, self-drilling uncoated bi-metal screw fasteners specified in Section 05 05 23, unless another fastener type is explicitly indicated; or supplied, required, recommended, or accepted by the manufacturer for actual in-service conditions applicable to the project.

D. Power-Actuated Fasteners: Specified in Section 05 05 23.

E. Fastenings: Provide backings, inserts, loose connection hardware, fasteners, anchors, attachments, connectors, and other items supplied, required, recommended, or accepted by the manufacturer for actual in-service conditions applicable to the project.

F. Other Accessories: Provide other accessories and secondary items normally furnished or necessary for a complete installation; or supplied, required, recommended, or accepted by the manufacturer for actual in-service conditions applicable to the project.

PART 3 - EXECUTION

3.1 EXAMINATION

A. Oversight: Ensure an adequate number of supervisors are present and proper supervision practices are followed at the project site before the installer begins work and at all times during installation.

B. Verification: Verify in-place supporting and adjacent construction conforms to the manufacturer’s requirements or recommendations and satisfies all other conditions that might affect the quality of installation or the durability, appearance, or performance of installed and adjacent items.

C. Evaluation and Assessment:

1. Identify project conditions that do not conform to the manufacturer’s instructions and other requirements and recommendations.

2. Perform or arrange and pay costs for all remedial work necessary to correct or improve deficient conditions, without limitation, before the installer begins work.

3.2 INSTALLATION

A. General Requirements:

1. Install framing using materials and methods required, recommended, or accepted by the manufacturer, along with manufacturer-recommended accessories and techniques.
2. Installed framing must be warrantable. Do not install, correct, or replace framing in a manner that results in any warranty or guarantee becoming void.

B. Metal Furring Special Techniques:

1. Direct Furring: Attach to concrete or to masonry with stub nails, screws designed for masonry attachment, or power-actuated fasteners spaced 24 inches on center.
2. Z-Furring:
   a. Except at outside corners, securely attach narrow flanges of furring members to walls with concrete stub nails, screws designed for masonry attachment, or power-actuated fasteners spaced 24 inches on center.
   b. At outside corners, attach wide flange of furring members to walls with short flange extending beyond corner; on adjacent wall surface, screw-attach short flange of furring channel to web of attached channel. At interior corners, space second member no more than 12 inches from corner and cut insulation to fit.

C. Metal Framing Special Techniques:

1. Align and securely attach floor and ceiling tracks to superstructure.
2. Install studs in single lengths extending from floor to underside of floor or roof structure above without joints, except where indicated on the Drawings as stopping at or above ceilings. Stud splicing is prohibited without prior written authorization from the Architect.
   a. Install studs so that flanges within framing systems point in same direction.
   b. Continue framing around ducts that penetrate partitions above ceilings.
   c. Where framing extends to overhead structural supports, install vertical deflection connectors to produce joints at tops of framing assemblies that prevent axial loading of finished assemblies.
   d. Where studs stop at or above ceilings, brace not more than every fourth stud with opposite-side bracing installed at 45-degree angles and securely fastened to the underside of the floor or roof structure above.
   e. Do not bridge building control and expansion joints with non-load-bearing steel framing members. Frame both sides of joints independently.
   f. Assemble corners using at least 3 studs.
3. Unless otherwise indicated, provide screw attachment to tracks for
   a. studs with gypsum board on only one side;
   b. studs on each side of doors and windows;
   c. studs supporting wall hung plumbing fixtures; and
   d. studs supporting wall hung urinal screens, toilet compartments, cabinets, equipment, and similar items.
4. Attach all other studs to tracks either by friction fit for single stud gypsum board partitions or by attaching with screws in conformance with the manufacturer's published installation instructions.

a. Space anchors within 6 inches of ends of each track segment ends, and not more than 24 inches on center.
b. Do not install fasteners within 3 inches of slab or curb edges.

5. Where required by engineering calculations, install horizontal bridging spaced not more than 54 inches on center. Unless otherwise indicated, provide bridging in partitions supporting wall supported cabinets.
   a. Tack-weld stiffeners to each stud.
   b. Provide an additional 3/4 inch channel 6 inches above door headers, and extend at least 3 studs beyond the jamb studs.
   c. Install channels in longest possible lengths. At end joints, lap at least 12 inches and wire-tie. Do not tie together channels on opposite sides of staggered or double stud partitions.

D. Door and Window Opening Special Techniques:
1. Provide double studs (installed face to face to form a tube) at locations adjacent to doors and openings.
2. Extend studs at door openings to slab or deck above and securely anchor both to bottom track and to top slab or deck.
3. Locate additional studs not more than 2 inches from door and window frames, abutting partitions, partition corners, and other construction.
4. Install sections of track over door and window frames with clip angles securely attached at each end to adjacent vertical studs. Install cut-to-length studs at vertical joint locations; and at standard spacing over the door frame header extending to the ceiling track.
5. Install cripple studs at opening heads adjacent to each jamb stud, with at least a 1/2 inch clearance from the jamb stud to allow for installation of control joint in the finished assembly.

E. Other Opening Special Techniques: Unless otherwise indicated, frame other openings and recesses in stud walls the same as that required for door openings.
1. Install framing below sills matching framing required above door heads.
2. Provide additional framing as required for the secure attachment of electrical boxes, fire extinguisher cabinets, and similar items located in stud walls.

F. Backing Plate Special Techniques:
1. Install supplementary framing and backing plates to support fixtures, equipment services, heavy trim, grab bars, toilet accessories, furnishings, or similar construction. Wall-mounted and wall-hung items that require backing plates include the following.
   a. Ladders.
   b. Cabinets.
   c. Door stops.
   d. Toilet compartments and screens.
   e. Toilet accessories.
   f. Grab bars.
   g. Plumbing fixtures.
   h. Other items when indicated.
2. Backing plates may be omitted if anchorage for wall-hung items is directly attached to at least 43-mil BMT (MSG 18) or heavier HDG metallic-coated cold-formed metal studs; or if the items are furnished with equivalent mounting devices.

G. Interface with Adjacent Items: materials, components, and accessories normally furnished or necessary to securely attach framing to supporting construction.

H. Installation Tolerances: Install framing within the following tolerance variations.

1. Maximum Out of Plumb: Not more than L/960 of span, or 1/8-inch in 10 feet.
2. Maximum Out of Level: Not more than L/960 of span, or 1/8-inch in 10 feet,
3. Maximum Out of Plane: Fastening surfaces of adjacent framing members may not vary by more than 1/8-inch.
4. Maximum Stud Spacing Variance: Not more than 1/8-inch. Cumulative error may not exceed minimum fastening requirements of sheathing or other finishing materials.

3.3 CORRECTION AND REPAIR

A. Non-conforming, damaged, and defective work must be brought into conformance with the Contract Documents. Correct and repair as necessary, without limitation, including arranging all correction and repair work and paying all correction and repair costs, until accepted in writing by the Architect.

B. Corrective and repair work must be performed in conformance with a correction and repair plan submitted to and accepted in writing by the Architect before correction or repair work begins. At a minimum, correction and repair plans must include

1. written descriptions of non-conforming, damaged, and defective work;
2. supporting sketches, diagrams, photographs, and other visual depictions of non-conforming, damaged, and defective work; and
3. similar written descriptions and visual depictions of Contractor-proposed corrections and repairs.

C. Arrange and pay costs for removing and replacing work that cannot be corrected or repaired to the Architect's acceptance.

3.4 CLEANING

A. Waste Management: After completing the work of this specification section, leave work areas free from debris, waste, scrap, equipment, tools, and other items.

END OF SECTION

SECTION 05 00 10

METAL FABRICATIONS

A. Miscellaneous ferrous metal structural shapes shall be fabricated with steel complying with ASTM A36 and A283. Shapes shall be galvanized whenever their installed location will be exposed to weather, floor cleaning, or other moisture; otherwise they shall be shop primed. Welding shall be done by the electric arc process; welding shall be inspected in accordance with CBC chapter 17A.

B. Nuts, bolts, and washers shall comply with ASTM A325, and shall be galvanized when exposed as noted above.

C. Separation of Dissimilar Metals: Ensure metal surfaces are permanently isolated from direct contact with potentially corrosive substrates by one of the following methods:
1. By applying to each metal surface either a bituminous coating or a rubberized-asphalt coating to a total DFT of at least 40 mils.
2. Providing high impact polystyrene shims to provide cathodic isolation between aluminum plates and steel, and metal plates and concrete.

D. Submittal Requirements: submit shop drawings.

E. Welding shall be inspected in accordance with CBC Chapter 17A and the Testing, Inspection, and Observation (TIO) program;

END OF SECTION

SECTION 05 51 00

METAL STAIRS

PART 1 - GENERAL

1.1 SUMMARY

A. Section Includes:
1. Shop-fabricated metal stairs.
2. Supplementary components and accessories normally furnished or necessary for a complete installation, whether or not such items are indicated on the Drawings or included in the Specifications.

B. Related Requirements:
1. Section 05 05 12 for hot dip galvanizing and galvanizing repair.
2. Section 05 05 13 for shop-applied primer.
3. Section 05 50 00 for separation of dissimilar metals.

1.2 REFERENCES

A. Abbreviations and Acronyms:
1. AWS: American Welding Society.
2. DFT: Dry Film Thickness.
3. HDG: Hot-Dip Galvanized.
4. SSPC: The Society for Protective Coatings.

B. Definitions:
1. Fabricator: Means the stair fabricator, unless otherwise indicated.

1.3 ADMINISTRATIVE REQUIREMENTS

A. Delegated Design Requirements:
1. Engineer, fabricate, assemble, and install metal stairs that conforms to the profiles indicated and other Contract Document requirements; meets specified performance criteria; and results in structurally sound, non-corroding, and weathertight assemblies that accommodate, resist, distribute, or transfer in-service loads without incipient or catastrophic failure.
2. Maintain visual design concept indicated, including sizes, profiles, and alignments. Deviation from visual design concept is non-conforming work and prohibited without prior written acceptance by the Architect.

B. Performance Requirements:

1. Minimum Uniform Stair Live Load: At least 100 pounds per square foot of projected plan area.
2. Minimum Individual Tread Concentrated Load: At least 300 pounds applied to an area 4 square inches at the mid-span of any tread, with no other loads applied.
3. Maximum Stair Deflection: Limit stringer, platform, and tread assembly framing

deflection under load to the following, measured in a direction normal to the floor plane.

a. Stringers: Not more than L/360 live load nor more than L/240 total load.
b. Platforms: Not more than L/360.
c. Treads: Not more than L/360 live load nor more than L/240 total load.

4. Railing, Handrail, and Infill Loads: Assume uniform and concentrated railing loads are not applied concurrently, and infill horizontal load are not applied concurrently with other loads.
   a. Minimum Uniform Load: At least 50 pounds per foot applied horizontally and vertically downward to the top rail.
   b. Minimum Concentrated Load: At least 200 pounds applied vertically downward and horizontally at any point along the top rail.
   c. Minimum Infill load: At least a 50-pound load horizontal load distributed over a one square foot area at any location.
5. Thermal Expansion and Contraction: Accommodate movement resulting from at least 120 deg. F ambient and 180 deg. F material surface temperature differentials (changes).
6. Dissimilar Metal Corrosion Protection: Permanently isolate metal surfaces from direct contact with incompatible materials and other potentially corrosive substrates as specified below.

1.4 SUBMITTALS

A. Action Submittals: Submit the following for responsive action (formal review and approval).
   1. Product Data:
      a. For manufactured items, submit manufacturer's product data, specifications, and all other information necessary to show conformance to the Contract Documents, excluding material safety data sheets (MSDSs), which are returned to the Contractor without review or responsive action.
   2. Shop Drawings:
      a. Submit dimensioned plans and elevations drawn to scale and showing metal stair layout and types. Show locations, sizes, and extents of all items, accessories, and trim. Label manufactured items by product name.
      b. Include project-specific dimensioned details drawn to scale showing profiles, shapes, joints, seams, and dimensions, including coves, miters, and corner conditions. Cross-reference details to plans and elevations.
      c. Indicate method of attaching, fastening, joining, adhering, and anchoring to adjacent construction.
         d. Show backings, embedments, fasteners, brackets, clips, cleats, straps, mounting devices, and other attachments.
         e. Label each attachment type; indicate manufacturer's product name for each manufactured item.
         f. Indicate base material and finish, fastener material and finish, and material and finish of items being fastened or attached.
         g. Label welds in conformance with the requirements of AWS publication A2.4, "*Standard Symbols for Welding, Brazing, and Nondestructive Examination*".

B. Informational Submittals: Submit the following for information (informal review: responsive action not expected or required, except to record non-conformance with

submittal requirements).

1. Delegated Design Submittals: Together with shop drawings, submit engineering calculations demonstrating conformance to the Contract Documents and all impacts of delegated design scope of work on other work.
   a. Calculations must be explicit and legible and must incorporate distinct cross-references to submitted shop drawings in sufficient quantity to render the calculations readily intelligible and reviewable.
   b. At a minimum, calculations must include design loads; analysis of supporting construction, including section-property computations; analysis of fasteners, anchors, attachments, and connectors; and signature and seal of the licensed professional engineer responsible for preparing them.
   c. Test reports are not an acceptable substitute for calculations and are returned to the Contractor without review or responsive action, except to record non-conformance with this requirement.
2. Qualification Statements: Submit written descriptions confirming experience specified in QUALITY ASSURANCE article below.

1.5 QUALITY ASSURANCE

A. Regulatory Requirements:
   1. Stairs:
      a. Treads, risers, and nosings must conform to the requirements of California Building Code Section 11B 504.
      b. Interior stairs must have the upper approach and lower tread marked by a stripe providing clear visual contrast. Exterior stairs must have the upper approach and all treads marked by a stripe providing clear visual contrast.
      c. The stripe providing clear visual contrast must be a minimum of 2 inches wide to a maximum of 4 inches wide placed parallel to, and not more than one inch from the nose of the step or upper approach. The stripe must extend the full width of the step or upper approach and must be of material that is at least as slip resistant as the other treads of the stair. A painted stripe must be acceptable. Grooves must not be used to satisfy this requirement.
      d. The radius of curvature at the leading edge of the tread must be no greater than 1/2-inch. Nosings that project beyond risers must have the underside of the leading edge curved or beveled. The maximum angle for a riser to slope under

      the tread must be 30 degrees from vertical. Nosings must extend 1-1/4-inch maximum over the tread below.
   e. Treads must be 11 inches deep minimum. Risers must be 7 inches high maximum and 4 inches high minimum. All steps on a flight of stairs must have uniform riser heights and uniform tread depths. Open risers are prohibited.
   2. Railings:
      a. Railings and Handrails must conform to the requirements of California Building Code Section 11B-505.
      b. Top of gripping surfaces of handrails must be 34 inches minimum and 38 inches maximum vertically above walking surfaces, stair nosings, and ramp surfaces. Handrails must be at a consistent height above such surfaces.
      c. Clearance between handrail gripping surfaces and adjacent surfaces must be 1-1/2 inches minimum. Handrail may be located in a recess if the recess is 3 inches maximum deep and 18 inches minimum clear above the top of the handrail.
      d. Handrail gripping surfaces must be continuous along their length and must not be

obstructed along their tops or sides. The bottoms of handrail gripping surfaces must not be obstructed for more than 20 percent of their length. Where provided, horizontal projections must occur 1-1/2-inch minimum below the bottom of the handrail gripping surfaces.

e. Handrail gripping surfaces with a circular cross section must have an outside diameter of 1-1/4-inches minimum and 2 inches maximum.

f. Handrail gripping surfaces with a non-circular cross section must have an outside dimension of 4 inches minimum and 6-1/4 inches maximum, and a cross- sectional dimension of 2-1/4 inches maximum.

g. Handrail gripping surfaces and any surfaces adjacent to them must be free of sharp or abrasive elements and must have rounded edges.

h. Handrails must not rotate within their fittings.

i. Handrail gripping surfaces must extend beyond and in the same direction of stair flights and ramp runs in accordance with California Building Code Section 11B-505.10. Such extensions are not required for continuous handrails at the inside turn of switchback or dogleg stairs and ramps.

j. A 2-inch minimum high curb or barrier must be provided to prevent the passage of a 4 inches diameter sphere rolling off the edges on a ramp or landing surface. Such a curb or barrier must be continuous and uninterrupted along the length of a ramp. California Building Code Section 11B-405.9.2

B. Quality Standard:

1. Design Standard for Galvanized Items: Items indicated as galvanized must be designed and fabricated in conformance with the requirements of AGA publication, "*The Design of Products to be Hot-Dip Galvanized after Fabrication"*, and ASTM A 385. Limit the use of vent and drain holes and locate where they drain by gravity and are concealed from view in the finish work.

2. Stair Assembly Standard: Provide stairs conforming to the requirements of NAAMM Standard AMP 510, "*Metal Stairs Manual*".

3. Railing Assembly Standard: Provide railings conforming to the requirements of ANSI/NAAMM Standard AMP 521, "*Pipe Railing Systems Manual"*.

4. Welding Standards: Welding procedures must conform to the requirements of the following American Welding Society publications.

   a. AWS D1.1, "*Structural Welding Code – Steel*".

   b. AWS D1.3, "*Structural Welding Code – Sheet Steel*".

   c. AWS D19.0, "*Welding Zinc Coated Steel*".

C. Qualifications:

1. Fabricator: Company or individuals must have at least 10 years' experience fabricating metal stairs installed on at least 100 previous projects similar to this project in size, material, design, and complexity

2. Installer: Company or individuals must have at least 5 years' experience installing metal stairs for at least 30 previous projects similar to this project in size, material, design, and complexity.

3. Welders: Welding personnel and supervisors must comply with the "*Qualification*" requirements of AWS quality standard publications. Only certified welders current in their certification may perform or supervise any welding work.

4. Supervisors: Individuals must have at least 7 years' experience installing metal stairs for at least 30 previous projects similar to this project in size, material, design, and complexity, including at least 2 years' supervisory experience directing and leading

metal stair installers.

5. Engineer: Must be a licensed professional structural engineer registered to practice in California having at least 10 years' experience performing the kind of engineering services indicated for at least 20 previous projects similar to this project in size, material, design, and complexity.

1.6 HANDLING

A. Receiving: Inspect all deliveries for deteriorated, damaged, and defective items.
   1. Reject items that are not packaged in a manner that prevents damage; or that exhibit deterioration or damage or have damaged or open packaging or containers.
   2. Unload and store only inspected and accepted items.

B. Storage: Store unloaded items as shipped. Furnish adequate dunnage and bracing during storage.
   1. Prevent stored items from contacting the floor or ground, from soiling and staining, and from deterioration and damage.
   2. If items are not stored in an enclosed location, then cover the tops and sides with securely-tied, waterproof, and breathable covers. Unvented polyethylene tarpaulins do not qualify as breathable covers and are prohibited. (due to potential accumulation of moisture beneath tarpaulin during certain environmental conditions)
   3. Incline covered items to ensure maximum drainage of accumulated moisture.
   4. Do not leave items uncovered where they might be exposed to weather or become wet from rain, mist, relative humidity, condensation, frost, and other sources of moisture; or exposed to other sources of deterioration and damage.

C. Handling: Handle items in a manner that that prevents damage.

D. Damaged Item Replacement: Promptly remove and replace deteriorated, damaged, or defective metal stair components with undamaged new metal stair components that do not exhibit deterioration, damage, or defects.

E. Packaging Waste Management: Do not burn or bury construction waste at the project site. Remove and legally dispose of all construction waste away from the project site.

PART 2 - PRODUCTS

2.1 METAL STAIR ASSEMBLIES

A. Description: Commercial Class convenience, egress, and access stairs.

B. Stair Construction:
   1. Stringers: Fabricate stringers from steel tubes, unless otherwise indicated, to visual design concept indicated, including member sizes, profiles and alignment of components. Provide closures for exposed ends of channel stringers.
   2. Platforms: Fabricate platforms from at least 0.1196-inch (MSG 11) uncoated steel sheet, and headers and framing members as indicated or required to conform to specified performance requirements.
   3. Treads: Fabricated from at least 0.0747-inch thick (MSG 14) uncoated steel and as follows. Pan treads with at least 4,000 pounds per square inch, natural-color, cast-in-place concrete with medium broom finish.

4. Risers: Fabricate from same materials as treads. Form tread and riser subassemblies from one piece of steel.

C. Nosings: Single-component abrasive stair nosing assemblies consisting of an extruded aluminum base container with integral anchoring lugs or studs, and an abrasive filler.
   1. Ribbed Abrasive Products: Provide one of the following, or equal.
      a. "Type 9511" manufactured by American Safety Tread Co.
      b. "Type R-315P" manufactured by Balco USA.
      c. "SuperTread Type XRS-3" manufactured by Grating Pacific, Inc.
   2. Requisite Properties:
      a. Width: 3 inches wide.
      b. Nominal Length: Match stair tread width, less 1/8-inch clearance.
      c. Minimum Lip: At least 3/8-inch.
      d. Minimum Thickness: At least 1/4-inch thick.
      e. Color: Gray.

D. Railings:
   1. Posts and Rails: Indicated on the Drawings.
   2. Infill: Indicated on the Drawings.
      3. Handrails: Indicated on the Drawings.
      4. Guardrail Brackets: Indicated on the Drawings.
      5. Wall Handrail Cast Iron Brackets: Provide "1701-2" cast ductile iron wall mount handrail bracket, Style U, with a projection of 2-1/2 inches from wall to center of handrail, and one 3/8-16 tapped mounting hole for use with flat or round handrail, unfinished; manufactured by R&B Wagner, Inc., or equal. Provide "B1416" anchor plate; or provide "1722" wall mount filler for 5/8-inch drywall where required to prevent crushing finish material.
      6. Welded Joint Finish Appearance: NOMMA Finish #2. (completely sanded joint, some undercutting and pinholes okay)
      7. Finish: Shop-prime as specified in Section 05 05 13 for field-applied high-performance coating specified in Section 09 97 13.

2.2 MATERIALS

A. Ductile Iron Castings: ASTM A 536, Grade 70-50-05 or better.

B. Steel Plate: ASTM A 36 (mild steel).

C. Uncoated Steel Coil, Sheet, and Strip: Finished cold-rolled steel coil, sheet, and strip conforming to ASTM A 1008, CS Type B (commercial steel), unexposed (interior items) and exposed, temper rolled (exterior items), regular matte finish (40 to 59 AA), mill phosphatized.

D. Hot-Rolled Steel Rods, Bars, and Shapes: ASTM A 36 (mild steel), merchant quality.

E. Steel Pipe: ASTM A 53, black pipe, Type and Grade as indicated below, size and weight class, schedule number, or outside diameter indicated and wall thickness as required by engineering calculations for type of use indicated.
   1. Type: Provide Type S (Seamless) pipe.

2. Grade: Provide Grade A pipe for cold bending; otherwise provide Grade B pipe.

F. Steel Tubing:

1. Steel Structural Tubing: ASTM A 500, Grade A, black, round or shaped hot-formed tubing as indicated, outside diameter or dimensions as indicated, and calculated wall thickness as required by engineering calculations for type of use indicated. Provide seamless tubing.
2. Mechanical Tubing: ASTM A 513, black, Type 5 M.D. (mandrel drawn or Drawn over a Mandrel).

2.3 ACCESSORIES

A. Flanges and Anchors: Unless otherwise indicated, provide cast or formed metal of the same type, material, and finish as the supported stairs.

B. Grout:

1. Description: Pre-packaged, non-shrink, non-metallic, non-corrosive, non-staining, non-gaseous grout conforming to ASTM C 1107, Grade A (drypack) and Grades B and C (flowable grout) of a consistency suitable for application within a 30- minute working time.
2. Requisite Properties:
   a. Type: Provide grout specifically recommended by manufacturer for interior and exterior applications.
   b. Minimum 28-day Compressive Strength: At least 7,500 psi.

C. Other Accessories: Provide other accessories and secondary items normally furnished or necessary for a complete installation; or supplied, required, recommended, or accepted by the manufacturer for actual in-service conditions applicable to the project.

2.4 FABRICATION

A. Shop Fabrication:

1. Fabricate items in largest sections practicable to minimize field jointing.
2. Fabricate exposed work precise, straight, and true to line, size, and shape; plumb, level, and square within allowable tolerances; and with accurate angles and surfaces, and crisp straight edges.
3. Fabricate exposed connections with flush hairline joints, and square and true edges and corners.
   a. Fabricate joints exposed to the weather to exclude water, or provide weep holes where water or condensation may accumulate.
   b. Form bent metal corners to the smallest radius possible without causing grain separation or otherwise impairing the strength of the material.
   c. Bend pipe without collapsing or deforming its walls, to produce a smooth, uniform curved section and to maintain uniform sectional shape.
   d. Form simple and compound curves by bending members in jigs to produce uniform curvature for each repetitive configuration required. Maintain cross section of member throughout entire bend without buckling, twisting, cracking, or otherwise deforming exposed surfaces of components.
   e. Provide wall returns at ends of wall-mounted handrails, unless otherwise indicated. Unless clearance between end of rail and wall is 1/4-inch or less, close ends of

returns.

4. Cut, reinforce, drill, punch, thread, and tap stairs as necessary to receive other stairs, components, accessories, hardware, and similar items, and as required to securely attach metal railings to supporting construction
5. Form rail-to-end post connections and all changes in rail direction with mitered joints
6. Provide all welded connections.
7. Before cleaning, treating, and applying specified finishes, remove blemishes by grinding.
8. Remove sharp or rough areas on exposed traffic surfaces. Ease exposed edges to a nominal 1/32-inch radius.

B. Fabrication Tolerances: Fabricated items must conform to the following; specified tolerances are non-cumulative.

1. Squareness: Not more than 1/8-inch difference in diagonal measurements.
2. Maximum Offset between Components at Joints: 1/16-inch except that at welded joints, offset are prohibited.
3. Maximum Misalignment of Adjacent Members: 1/16-inch.
4. Maximum Bow: 1/8-inch in 48 inches.
5. Maximum Deviation from Plane: 1/16-inch in 48 inches.

PART 3 - EXECUTION

3.1 EXAMINATION

A. Oversight: Ensure an adequate number of supervisors are present and proper supervision practices are followed at the project site before the installer begins work and at all times during installation.

B. Verification: Verify that in-place construction conforms to the manufacturer's requirements or recommendations and satisfies all other conditions that might affect the quality of installation or the durability, appearance, or performance of installed items.

C. Evaluation and Assessment:

1. Identify project conditions that do not conform to the fabricator's instructions and other requirements and recommendations.
2. Perform or arrange and pay costs for all remedial work necessary to correct or improve deficient conditions, without limitation, before the installer begins work.

3.2 INSTALLATION

A. General Requirements:

1. Scribe and cope items as necessary for an accurate fit. Perform required cutting, drilling, and fitting for metal stair installation.
2. Set metal stairs true to line, to required levels and lines, plumb, square, and cut and fitted without warp or rack; sloped or level as required; with flush well-fitted joints; and in alignment with adjacent construction.
3. Shim as required with concealed shims.
4. Dry-pack metal stairs supported on concrete and masonry to provide firm, level

bearing surfaces.

5. Provide temporary bracing or anchors for items indicated as built into concrete, masonry, or similar construction.
6. Fit exposed connections accurately to form flush hairline joints

B. Interface with Adjacent Items:

1. Attachment: Provide materials, components, and accessories normally furnished or necessary to securely attach metal stairs to supporting construction.
2. Field Welding:
   a. Comply with AWS quality standard publications for manual shielded arc welding procedures, appearance and quality of welds, and methods to correct faulty welds.
   b. Use materials and methods that minimize distortion and develop strength and corrosion resistance of base metals.
   c. Before welding, grind to remove zinc coating from one to 4 inches from either side of the intended weld zone and on both sides of the item.
   d. Obtain fusion without undercut or overlap.
   e. Promptly remove welding flux.
   f. At exposed connections, finish exposed welds and surfaces smooth and blended so no roughness shows after finishing and contour of welded surface matches that of adjacent surface.
   g. Do not weld, cut, or abrade exterior surfaces hot-dip galvanized after fabrication and are for bolted or screwed field connections.
   h. Field-weld connections indicated as exposed joints but cannot be shop-welded because of shipping size limitations.
   i. Welds remaining exposed must be ground smooth and flush to match and blend with parent metal surfaces.
   j. Clean field welds, weld spatter, bolted connections, and abraded areas promptly after installation.

C. Installation Tolerances: Install metal stairs to an allowable tolerance variation of not more than 1/4-inch from true position and not more than 1/8-inch and from plumb, level, and alignment.

3.3 CORRECTION AND REPAIR

A. Non-conforming, damaged, and defective work must be brought into conformance with the Contract Documents. Correct and repair as necessary, without limitation, including arranging all correction and repair work and paying all correction and repair costs, until accepted in writing by the Architect.

B. Corrective and repair work must be performed in conformance with a correction and repair plan submitted to and accepted in writing by the Architect before correction or repair work begins. At a minimum, correction and repair plans must include

1. written descriptions of non-conforming, damaged, and defective work;
2. supporting sketches, diagrams, photographs, and other visual depictions of non-conforming, damaged, and defective work; and
3. similar written descriptions and visual depictions of Contractor-proposed corrections and repairs.

C. Arrange and pay costs for removing and replacing work that cannot be corrected or

repaired to the Architect's acceptance.

D. Damaged Primer Touchup: Clean and prepare damaged primed surfaces in conformance with manufacturer's published instructions and SSPC surface preparation standard SSPC-SP11 "*Power Tool Cleaning to Bare Metal*".

1. Sand smooth and re-clean.
2. Spot-prime bare metal surfaces with specified primer applied to a total spot primer DFT of at least 5 mils.
3. Overlap undamaged primer areas with spot primer at least 2 inches.

E. Damaged Galvanizing Touchup: Repair damaged galvanized items or re-galvanize items that cannot be satisfactorily repaired to the Architect's acceptance.

1. Zinc-Based Solder Repair: Repair damaged galvanizing in conformance with ASTM A 780 Annex A1.
2. Organic Zinc-Rich Cold Galvanizing Compound Repair:
   a. Repair damaged galvanizing in conformance with ASTM A 780 Annex A2
   b. Apply cold galvanizing repair compound to a DFT of 1.5 plus or minus 0.5 mils per coat, when measured in conformance with SSPC publication SSPC-PA 2, "*Determining Compliance to Required DFT*". Provide 2 coats.

3.4 CLEANING

A. Waste Management: After completing the work of this specification section, leave work areas free from debris, waste, scrap, equipment, tools, and other items.

END OF SECTION

SECTION 05 73 00
DECORATIVE METAL RAILINGS

PART 1 - GENERAL

1.1 SUMMARY

A. Section Includes:
1. Decorative metal railings.
2. Supplementary components and accessories normally furnished or necessary for a complete installation, whether or not such items are indicated on the Drawings or included in the Specifications.

B. Related Requirements:
1. Section 05 05 12 for hot-dip galvanizing
2. Section 05 05 13 for shop-applied primer.
3. Section 05 50 00 for separation of dissimilar metals.

1.2 REFERENCES

A. Abbreviations and Acronyms:
1. AWS: American Welding Society.
2. DFT: Dry Film Thickness.
3. HDG: Hot-Dip Galvanized.
4. SSPC: The Society for Protective Coatings.

B. Definitions:
1. Fabricator: Means the metal fabricator, unless otherwise indicated.

1.3 ADMINISTRATIVE REQUIREMENTS

A. Delegated Design Requirements:
1. Engineer, fabricate, assemble, and install metal railings that conforms to the profiles indicated and other Contract Document requirements; meets specified performance criteria; and results in structurally sound, non-corroding, and weathertight assemblies that accommodate, resist, distribute, or transfer in-service loads without incipient or catastrophic failure.
2. Maintain visual design concept indicated, including sizes, profiles, and alignments. Deviation from visual design concept is non-conforming work and prohibited without prior written acceptance by the Architect.

B. Performance Requirements:

1. Railing, Handrail, and Infill Loads: Assume uniform and concentrated railing loads are not applied concurrently, and infill horizontal load are not applied concurrently with other loads.
   a. Minimum Uniform Load: At least 50 pounds per foot applied horizontally and vertically downward to the top rail.

b. Minimum Concentrated Load: At least 200 pounds applied vertically downward and horizontally at any point along the top rail.

c. Minimum Infill load: At least a 50-pound load horizontal load distributed over a one square foot area at any location.

2. Thermal Expansion and Contraction: Accommodate movement resulting from at least 120 deg. F ambient and 180 deg. F material surface temperature differentials (changes).

3. Dissimilar Metal Corrosion Protection: Permanently isolate metal surfaces from direct contact with incompatible materials and other potentially corrosive substrates as specified below.

1.4 SUBMITTALS

A. Action Submittals: Submit the following for responsive action (formal review and approval).

1. Product Data:

a. For manufactured items, submit manufacturer's product data, specifications, and all other information necessary to show conformance to the Contract Documents, excluding material safety data sheets (MSDSs), which are returned to the Contractor without review or responsive action.

2. Shop Drawings:

a. Submit dimensioned plans and elevations drawn to scale and showing metal railing layout and types. Show locations, sizes, and extents of all items, accessories, and trim. Label manufactured items by product name.

b. Include project-specific dimensioned details drawn to scale showing profiles, shapes, joints, seams, and dimensions, including coves, miters, and corner conditions. Cross-reference details to plans and elevations.

c. Indicate method of attaching, fastening, joining, adhering, and anchoring to adjacent construction.

d. Show backings, embedments, fasteners, brackets, clips, cleats, straps, mounting devices, and other attachments.

e. Label each attachment type; indicate manufacturer's product name for each manufactured item.

f. Indicate base material and finish, fastener material and finish, and material and finish of items being fastened or attached.

g. Label welds in conformance with the requirements of AWS publication A2.4, "*Standard Symbols for Welding, Brazing, and Nondestructive Examination*".

B. Informational Submittals: Submit the following for information (informal review: responsive action not expected or required, except to record non-conformance with submittal requirements).

1. Delegated Design Submittals: Together with shop drawings, submit engineering calculations demonstrating conformance to the Contract Documents and all impacts of delegated design scope of work on other work.

a. Calculations must be explicit and legible and must incorporate distinct cross-references to submitted shop drawings in sufficient quantity to render the calculations readily intelligible and reviewable.

b. At a minimum, calculations must include design loads; analysis of supporting construction, including section-property computations; analysis of fasteners, anchors, attachments, and connectors; and signature and seal of the licensed professional engineer responsible for preparing them.

c. Test reports are not an acceptable substitute for calculations and are returned to the Contractor without review or responsive action, except to record non-conformance with this requirement.

2. Qualification Statements: Submit written descriptions confirming experience specified in QUALITY ASSURANCE article below.

1.5 QUALITY ASSURANCE

A. Regulatory Requirements:

1. Railings and Handrails must conform to the requirements of California Building Code Section 11B-505.
2. Top of gripping surfaces of handrails must be 34 inches minimum and 38 inches maximum vertically above walking surfaces, stair nosings, and ramp surfaces. Handrails must be at a consistent height above such surfaces.
3. Clearance between handrail gripping surfaces and adjacent surfaces must be 1-1/2 inches minimum. Handrail may be located in a recess if the recess is 3 inches maximum deep and 18 inches minimum clear above the top of the handrail.
4. Handrail gripping surfaces must be continuous along their length and must not be obstructed along their tops or sides. The bottoms of handrail gripping surfaces must not be obstructed for more than 20 percent of their length. Where provided, horizontal projections must occur 1-1/2-inch minimum below the bottom of the handrail gripping surfaces.
5. Handrail gripping surfaces with a circular cross section must have an outside diameter of 1-1/4-inches minimum and 2 inches maximum.
6. Handrail gripping surfaces with a non-circular cross section must have an outside dimension of 4 inches minimum and 6-1/4 inches maximum, and a cross-sectional dimension of 2-1/4 inches maximum.
7. Handrail gripping surfaces and any surfaces adjacent to them must be free of sharp or abrasive elements and must have rounded edges.
8. Handrails must not rotate within their fittings.
9. Handrail gripping surfaces must extend beyond and in the same direction of stair flights and ramp runs in accordance with California Building Code Section 11B-

505.10. Such extensions are not required for continuous handrails at the inside turn of switchback or dogleg stairs and ramps.

10. A 2-inch minimum high curb or barrier must be provided to prevent the passage of a 4 inches diameter sphere rolling off the edges on a ramp or landing surface. Such a curb or barrier must be continuous and uninterrupted along the length of a ramp. California Building Code Section 11B-405.9.2

B. Quality Standard:

1. Design Standard for Galvanized Items: Items indicated as galvanized must be designed and fabricated in conformance with the requirements of AGA publication, "*The Design of Products to be Hot-Dip Galvanized after Fabrication"*, and ASTM A 385. Limit the use of vent and drain holes and locate where they drain by gravity and are concealed from view in the finish work.
2. Railing Assembly Standard: Provide railings conforming to the requirements of NAAMM Standard AMP 510, "*Metal Railings Manual*".
3. Railing Assembly Standard: Provide railings conforming to the requirements of ANSI/NAAMM Standard AMP 521, "*Pipe Railing Systems Manual"*.
4. Welding Standards: Welding procedures must conform to the requirements of the

following American Welding Society publications.

a. AWS D1.1, "*Structural Welding Code – Steel*".
b. AWS D1.3, "*Structural Welding Code – Sheet Steel*".
c. AWS D19.0, "*Welding Zinc Coated Steel*".

C. Qualifications:

1. Fabricator: Company or individuals must have at least 10 years' experience fabricating metal railings installed on at least 100 previous projects similar to this project in size, material, design, and complexity
2. Installer: Company or individuals must have at least 5 years' experience installing metal railings for at least 30 previous projects similar to this project in size, material, design, and complexity.
3. Welders: Welding personnel and supervisors must comply with the "*Qualification*" requirements of AWS quality standard publications. Only certified welders current in their certification may perform or supervise any welding work.
4. Supervisors: Individuals must have at least 7 years' experience installing metal railings for at least 30 previous projects similar to this project in size, material, design, and complexity, including at least 2 years' supervisory experience directing and leading metal railing installers.
5. Engineer: Must be a licensed professional structural engineer registered to practice in California having at least 10 years' experience performing the kind of engineering services indicated for at least 20 previous projects similar to this project in size, material, design, and complexity.

1.6 HANDLING

A. Receiving: Inspect all deliveries for deteriorated, damaged, and defective items.

1. Reject items that are not packaged in a manner that prevents damage; or that exhibit deterioration or damage or have damaged or open packaging or containers.
2. Unload and store only inspected and accepted items.

B. Storage: Store unloaded items as shipped. Furnish adequate dunnage and bracing during storage.

1. Prevent stored items from contacting the floor or ground, from soiling and staining, and from deterioration and damage.
2. If items are not stored in an enclosed location, then cover the tops and sides with securely-tied, waterproof, and breathable covers. Unvented polyethylene tarpaulins do not qualify as breathable covers and are prohibited. (due to potential accumulation of moisture beneath tarpaulin during certain environmental conditions)
3. Incline covered items to ensure maximum drainage of accumulated moisture.
4. Do not leave items uncovered where they might be exposed to weather or become wet from rain, mist, relative humidity, condensation, frost, and other sources of moisture; or exposed to other sources of deterioration and damage.

C. Handling: Handle items in a manner that that prevents damage.

D. Damaged Item Replacement: Promptly remove and replace deteriorated, damaged, or defective railing components with undamaged new railing components that do not exhibit deterioration, damage, or defects.

E. Packaging Waste Management: Do not burn or bury construction waste at the project site. Remove and legally dispose of all construction waste away from the project site.

PART 2 - PRODUCTS

2.1 DECORATIVE METAL RAILINGS

A. Posts and Rails: Indicated on the Drawings.

B. Infill: Indicated on the Drawings.

C. Handrails: Indicated on the Drawings.

D. Guardrail Brackets: Indicated on the Drawings.

E. Welded Joint Finish Appearance: NOMMA Finish #1. (no evidence of a welded joint)

F. Steel Finish: Shop-prime as specified in Section 05 05 13 for field-applied high-performance coating finish specified in Section 09 97 13.

2.2 STEEL

A. Steel Plate: ASTM A 36 (mild steel).

B. Uncoated Steel Coil, Sheet, and Strip: Finished cold-rolled steel coil, sheet, and strip conforming to ASTM A 1008, CS Type B (commercial steel), unexposed (interior items) and exposed, temper rolled (exterior items), regular matte finish (40 to 59 AA), mill phosphatized.

C. Hot-Rolled Steel Rods, Bars, and Shapes: ASTM A 36 (mild steel), merchant quality.

D. Steel Pipe: ASTM A 53, black pipe, Type and Grade as indicated below, size and weight class, schedule number, or outside diameter indicated and wall thickness as required by engineering calculations for type of use indicated.
   1. Appearance: Type S (seamless).
   2. Bending: Provide Grade A pipe when cold bending is required; otherwise provide Grade B pipe.

E. Steel Tubing:
   1. Steel Structural Tubing: ASTM A 500, Grade A, black, round or shaped hot-formed tubing as indicated, outside diameter or dimensions as indicated, and calculated wall thickness as required by engineering calculations for type of use indicated. Provide seamless tubing.
   2. Mechanical Tubing: ASTM A 513, black, Type 5 M.D. (mandrel drawn or Drawn over a Mandrel).

2.3 FABRICATION

A. Shop Fabrication:
   1. Fabricate items in largest sections practicable to minimize field jointing.

2. Fabricate exposed work precise, straight, and true to line, size, and shape; plumb, level, and square within allowable tolerances; and with accurate angles and surfaces, and crisp straight edges.
3. Fabricate exposed connections with flush hairline joints, and square and true edges and corners.
   a. Fabricate joints exposed to the weather to exclude water, or provide weep holes where water or condensation may accumulate.
   b. Form bent metal corners to the smallest radius possible without causing grain separation or otherwise impairing the strength of the material.
   c. Bend pipe without collapsing or deforming its walls, to produce a smooth, uniform curved section and to maintain uniform sectional shape.
   d. Form simple and compound curves by bending members in jigs to produce uniform curvature for each repetitive configuration required. Maintain cross section of member throughout entire bend without buckling, twisting, cracking, or otherwise deforming exposed surfaces of components.

e. Provide wall returns at ends of wall-mounted handrails, unless otherwise indicated. Unless clearance between end of rail and wall is 1/4-inch or less, close ends of returns.

4. Cut, reinforce, drill, punch, thread, and tap fabrications as necessary to receive other fabrications, components, accessories, hardware, and similar items, and as required to securely attach metal railings to supporting construction
5. Form rail-to-end post connections and all changes in rail direction with mitered joints
6. Provide all welded connections.
7. Before cleaning, treating, and applying specified finishes, remove blemishes by grinding.
8. Remove sharp or rough areas on exposed traffic surfaces. Ease exposed edges to a nominal 1/32-inch radius.

B. Fabrication Tolerances: Fabricated items must conform to the following; specified tolerances are non-cumulative.
   1. Squareness: Not more than 1/8-inch difference in diagonal measurements.
   2. Maximum Offset between Components at Joints: 1/16-inch except that at welded joints, offsets are prohibited.
   3. Maximum Misalignment of Adjacent Members: 1/16-inch.
   4. Maximum Bow: 1/8-inch in 48 inches.
   5. Maximum Deviation from Plane: 1/16-inch in 48 inches.

2.4 ACCESSORIES

A. Flanges and Anchors: Unless otherwise indicated, provide cast or formed metal of the same type, material, and finish as the supported railings.

B. Grout:
   1. Description: Pre-packaged, non-shrink, non-metallic, non-corrosive, non-staining, non-gaseous grout conforming to ASTM C 1107, Grade A (drypack) and Grades B and C (flowable grout) of a consistency suitable for application within a 30- minute working time.
   2. Requisite Properties:
      a. Type: Provide grout specifically recommended by manufacturer for interior and

exterior applications.

b. Minimum 28-day Compressive Strength: At least 7,500 psi.

C. Other Accessories: Provide other accessories and secondary items normally furnished or necessary for a complete installation; or supplied, required, recommended, or accepted by the manufacturer for actual in-service conditions applicable to the project.

PART 3 - EXECUTION

3.1 EXAMINATION

A. Oversight: Ensure an adequate number of supervisors are present and proper supervision practices are followed at the project site before the installer begins work and at all times during installation.

B. Verification: Verify that in-place construction conforms to the manufacturer's requirements or recommendations and satisfies all other conditions that might affect the quality of installation or the durability, appearance, or performance of installed items.

C. Evaluation and Assessment:

1. Identify project conditions that do not conform to the fabricator's instructions and other requirements and recommendations.
2. Perform or arrange and pay costs for all remedial work necessary to correct or improve deficient conditions, without limitation, before the installer begins work.

3.2 PREPARATION

A. Dissimilar Metal Corrosion Protection: Prevent galvanic action by permanently isolating metal surfaces from direct contact with more noble or cationic metals, incompatible materials, and other potentially corrosive surfaces in conformance with Section 05 50 00.

3.3 INSTALLATION

A. General Requirements:

1. Scribe and cope items as necessary for an accurate fit. Perform required cutting, drilling, and fitting for metal railing installation.
2. Set metal railings true to line, to required levels and lines, plumb, square, and cut and fitted without warp or rack; sloped or level as required; with flush well-fitted joints; and in alignment with adjacent construction.
3. Shim as required with concealed shims.
4. Dry-pack metal railings supported on concrete and masonry to provide firm, level bearing surfaces.
5. Provide temporary bracing or anchors for items indicated as built into concrete, masonry, or similar construction.
6. Fit exposed connections accurately to form flush hairline joints

B. Interface with Adjacent Items:

1. Attachment: Provide materials, components, and accessories normally furnished or necessary to securely attach metal railings to supporting construction.
2. Field Welding:

a. Comply with AWS quality standard publications for manual shielded arc welding procedures, appearance and quality of welds, and methods to correct faulty welds.
b. Use materials and methods that minimize distortion and develop strength and corrosion resistance of base metals.
c. Before welding, grind to remove zinc coating from one to 4 inches from either side of the intended weld zone and on both sides of the item.
d. Obtain fusion without undercut or overlap.
e. Promptly remove welding flux.
f. At exposed connections, finish exposed welds and surfaces smooth and blended so no roughness shows after finishing and contour of welded surface matches that of adjacent surface.
g. Do not weld, cut, or abrade exterior surfaces hot-dip galvanized after fabrication and are for bolted or screwed field connections.
h. Field-weld connections indicated as exposed joints but cannot be shop-welded because of shipping size limitations.
i. Welds remaining exposed must be ground smooth and flush to match and blend with parent metal surfaces.
j. Clean field welds, weld spatter, bolted connections, and abraded areas promptly after installation.

C. Installation Tolerances: Install metal railings to an allowable tolerance variation of not more than 1/4-inch from true position and not more than 1/8-inch and from plumb, level, and alignment.

3.4 CORRECTION AND REPAIR

A. Non-conforming, damaged, and defective work must be brought into conformance with the Contract Documents. Correct and repair as necessary, without limitation, including arranging all correction and repair work and paying all correction and repair costs, until accepted in writing by the Architect.

B. Corrective and repair work must be performed in conformance with a correction and repair plan submitted to and accepted in writing by the Architect before correction or repair work begins. At a minimum, correction and repair plans must include
1. written descriptions of non-conforming, damaged, and defective work;
2. supporting sketches, diagrams, photographs, and other visual depictions of non-conforming, damaged, and defective work; and
3. similar written descriptions and visual depictions of Contractor-proposed corrections and repairs.

C. Arrange and pay costs for removing and replacing work that cannot be corrected or repaired to the Architect's acceptance.

D. Damaged Primer Touchup: Clean and prepare damaged primed surfaces in conformance with manufacturer's published instructions and SSPC surface preparation standard SSPC-SP11 "*Power Tool Cleaning to Bare Metal*".
1. Sand smooth and re-clean.
2. Spot-prime bare metal surfaces with specified primer applied to a total spot primer DFT of at least 5 mils.
3. Overlap undamaged primer areas with spot primer at least 2 inches.

3.5 CLEANING

A. Waste Management: After completing the work of this specification section, leave work areas free from debris, waste, scrap, equipment, tools, and other items.

END OF SECTION

SECTION 06 10 00
ROUGH CARPENTRY

PART 1 - GENERAL

1.1 SUMMARY

A. This Section includes the following:

1. Wood blocking and nailers.
2. Plywood backing panels.

1.2 DEFINITIONS

A. Lumber grading agencies, and the abbreviations used to reference them, include the following:

1. NLGA - National Lumber Grades Authority.
2. WCLIB - West Coast Lumber Inspection Bureau.
3. WWPA - Western Wood Products Association.

1.3 SUBMITTALS

A. Product Data: For each type of process and factory-fabricated product. Indicate component materials and dimensions and include construction and application details.

1. Include data for wood-preservative treatment from chemical treatment manufacturer and certification by treating plant that treated materials comply with requirements. Indicate type of preservative used, net amount of preservative retained, and chemical treatment manufacturer's written instructions for handling, storing, installing, and finishing treated material.
2. Include data for fire-retardant treatment from chemical treatment manufacturer and certification by treating plant that treated materials comply with requirements. Include physical properties of treated materials, both before and after exposure to elevated temperatures when tested according to ASTM D 5516 and ASTM D 5664.
3. For products receiving a waterborne treatment, include statement that moisture content of treated materials was reduced to levels specified before shipment to Project site.

1.4 DELIVERY, STORAGE, AND HANDLING

A. Stack lumber, plywood, and other panels; place spacers between each bundle to provide air circulation. Provide for air circulation around stacks and under coverings.

PART 2 - PRODUCTS

2.1 WOOD PRODUCTS, GENERAL

A. Wood Structural Panels:

1. Plywood: Either DOC PS 1 or DOC PS 2.
2. Thickness: As needed to comply with requirements specified but not less than thickness indicated.

3. Comply with "Code Plus" provisions in APA Form No. E30K, "APA Design/Construction Guide: Residential & Commercial."
4. Factory mark panels according to indicated standard.

2.2 WOOD-PRESERVATIVE-TREATED MATERIALS

A. Preservative Treatment by Pressure Process: AWPA C2, except that lumber that is not in contact with the ground and is continuously protected from liquid water may be treated according to AWPA C31 with inorganic boron (SBX).

1. Preservative Chemicals: Acceptable to authorities having jurisdiction and one of the following:

a. Ammoniacal, or amine, copper quat (ACQ).
b. Copper bis (dimethyldithiocarbamate) (CDDC).
c. Ammoniacal copper citrate (CC).
d. Copper azole, Type A (CBA-A).
e. Oxine copper (copper-8-quinolinolate) in a light petroleum solvent.

2. Prohibited preservative chemicals: Compounds containing chromium or arsenic.

3. For exposed items indicated to receive a stained or natural finish, use chemical formulations that do not require incising, contain colorants, bleed through, or otherwise adversely affect finishes.

B. Kiln-dry material after treatment to maximum moisture content of 19 percent for lumber. Do not use material that is warped or does not comply with requirements for untreated material.

C. Mark each treated item with the treatment quality mark of an inspection agency approved by the American Lumber Standards Committee Board of Review.

D. Application: Treat items indicated on Drawings, and the following:

1. Wood cants, nailers, curbs, blocking, stripping, and similar members in connection with roofing, flashing, vapor barriers, and waterproofing.
2. Wood sills, blocking, furring, stripping, and similar concealed members in contact with masonry or concrete.

E. Basis of Design: CSI. Other acceptable manufacturers subject to compliance with requirements: Hickson, Hoover and Osmose.

2.3 FIRE-RETARDANT-TREATED MATERIALS

A. General: Where fire-retardant-treated materials are indicated, provide materials that comply with performance requirements in AWPA C20 (lumber) and AWPA C27 (plywood). Identify fire-retardant-treated wood with appropriate classification marking of UL, U.S. Testing, Timber Products Inspection, or another testing and inspecting agency acceptable to authorities having jurisdiction.
1. Use treatment for which chemical manufacturer publishes physical properties of treated wood after exposure to elevated temperatures, when tested by a qualified independent testing agency according to ASTM D 5664, for lumber and ASTM D 5516, for plywood.
2. Use treatment that does not promote corrosion of metal fasteners.
3. Extent: All wood and plywood installed within building conditioned space (inside sheathing or decking).
4. Use Interior Type A High Temperature (HT), unless otherwise indicated.

B. Basis of Design: CSI. Other acceptable manufacturers subject to compliance with requirements: Hickson and Hoover.

2.4 MISCELLANEOUS LUMBER

A. General: Provide miscellaneous lumber indicated and lumber for support or attachment of other construction, including the following:

1. Blocking.
2. Nailers.
3. Rooftop equipment bases and support curbs.
4. Cants.
5. Furring.
6. Grounds.
7. Utility shelving.

B. For items of dimension lumber size, provide Construction or No. 2 grade lumber

C. For concealed boards, provide lumber with 15 percent maximum moisture content and any of the following species and grades:

1. Mixed southern pine, No. 3 grade; SPIB.
2. Hem-fir or hem-fir (north), Standard or No. 3 Common grade; NLGA, WCLIB, or WWPA.
3. Spruce-pine-fir (south) or spruce-pine-fir, Standard or No. 3 Common grade;

   NeLMA, NLGA, WCLIB, or WWPA.
4. Eastern softwoods, No. 3 Common grade; NELMA.
5. Northern species, No. 3 Common grade; NLGA.
6. Western woods, Standard or No. 3 Common grade; WCLIB or WWPA.

D. For blocking not used for attachment of other construction, Utility, Stud, or No. 3 grade lumber of any species may be used provided that it is cut and selected to eliminate defects that will interfere with its attachment and purpose.

E. For blocking and nailers used for attachment of other construction, select and cut lumber to eliminate knots and other defects that will interfere with attachment of other work.

2.5 PANEL PRODUCTS

A. Telephone and Electrical Equipment Backing Panels: DOC PS 1, Exposure 1, C-D Plugged, fire-retardant treated, in thickness indicated or, if not indicated, not less than 1/2 inch thick.

2.6 FASTENERS

A. General: Provide fasteners of size and type indicated that comply with requirements specified in this Article for material and manufacture.

1. Where carpentry is exposed to weather, in ground contact, or in area of high relative humidity, provide fasteners with hot-dip zinc coating complying with ASTM A 153/A 153M.

B. Nails, Wire, Brads, and Staples: FS FF-N-105.

C. Power-Driven Fasteners: CABO NER-272.

D. Wood Screws: ASME B18.6.1.

E. Screws for Fastening to Cold-Formed Metal Framing: ASTM C 954, except with wafer heads and reamer wings, length as recommended by screw manufacturer for material being fastened.

F. Lag Bolts: ASME B18.2.1.

G. Bolts: Steel bolts complying with ASTM A 307, Grade A; with ASTM A 563 hex nuts and, where indicated, flat washers.

H. Expansion Anchors: Anchor bolt and sleeve assembly of material indicated below with capability to sustain, without failure, a load equal to 6 times the load imposed when installed in unit masonry assemblies and equal to 4 times the load imposed when installed in concrete as determined by testing per ASTM E 488 conducted by a qualified independent testing and inspecting agency.

1. Material: Carbon-steel components, zinc plated to comply with ASTM B 633, Class Fe/Zn 5.
2. Material: Stainless steel with bolts and nuts complying with ASTM F 593 and ASTM F 594, Alloy Group 1 or 2.

PART 3 - EXECUTION

3.1 INSTALLATION, GENERAL

A. Discard units of material with defects that impair quality of carpentry and that are too small to use with minimum number of joints or optimum joint arrangement.

B. Set carpentry to required levels and lines, with members plumb, true to line, cut, and fitted. Fit carpentry to other construction; scribe and cope as needed for accurate fit.

C. Apply field treatment complying with AWPA M4 to cut surfaces of preservative-treated lumber and plywood.

D. Securely attach carpentry work as indicated and according to applicable codes and recognized standards.

E. Countersink fastener heads on exposed carpentry work and fill holes with wood filler.

F. Use fasteners of appropriate type and length. Predrill members when necessary to avoid splitting wood.

3.2 PANEL PRODUCT INSTALLATION

A. Wood Structural Panels: Comply with applicable recommendations contained in APA Form No. E30K, "APA Design/Construction Guide: Residential & Commercial," for types of structural-use panels and applications indicated.

1. Comply with "Code Plus" provisions in above-referenced guide.

3.3 WOOD BLOCKING AND NAILER INSTALLATION

A. Install where indicated and where required for attaching other work. Form to shapes indicated and cut as required for true line and level of attached work. Coordinate locations with other work involved.

B. Attach items to substrates to support applied loading. Recess bolts and nuts flush with surfaces unless otherwise indicated.

END OF SECTION

SECTION 06 64 00

INTERIOR ARCHITECTURAL WOODWORK

PART 1 - GENERAL

1.01 SUMMARY

A. Section Includes:

1. Plastic-laminate cabinets.
2. Solid Polymer Countertops and panels.
3. Recycled Glass Countertops

1.02 DEFINITIONS

A. Interior architectural woodwork includes wood furring, blocking, shims, and hanging strips for installing woodwork items, unless concealed within other construction before woodwork installation.

B. Quality Standard: Woodwork Institute “North American Architectural Woodwork Standards” (NAAWS).

1.03 SUBMITTALS

A. Product Data: For high-pressure decorative laminate, thermoset decorative overlay, solid-surfacing polymer material, cabinet hardware and accessories, and finishing materials and processes.

B. Shop Drawings: Show location of each item, dimensioned plans and elevations, largescale details, attachment devices, and other components.

1. Show details full size.
2. Show locations and sizes of furring, blocking, and hanging strips, including concealed blocking and reinforcement specified in other Sections.
3. Show locations and sizes of cutouts and holes for plumbing fixtures and other items installed in architectural woodwork.
4. Apply WI-certified compliance label to first page of Shop Drawings.
5. For countertops. Show materials, finishes, edge and backsplash profiles, methods of joining, dimensions, component sizes, fabrication details, attachment provisions, and coordination requirements with adjacent work. Include rough-in dimensions for mechanical trades.
   a. Show locations and sizes of cutouts and holes for plumbing fixtures, faucets, and soap dispensers installed in countertops.

C. Coordination Drawings: Submit drawings showing required locations for blocking, backing plates, or other anchorage to be provided under other sections. Deliver copies of reviewed drawings to installers of other work (such as metal support systems and concrete).

D. Samples for Verification: For the following:

1. Plastic-laminate-clad panel products, 8 by 10 inches, for each type, color, pattern, and surface finish.

2. Thermoset decorative-overlay surfaced panel products, 8 by 10 inches, for each type, color, pattern, and surface finish.
3. Solid-surfacing polymer materials, 6 inches square.
4. One full size solid surfacing polymer material countertop, with front edge and backsplash, 8 by 10 inches, of construction and in configuration specified, with corner pieces.
5. Exposed cabinet hardware and accessories, one unit for each type.

E. Keying Schedule: Identify each lock with change, master, and grand master key assignments.

1. Include key identification system.

F. Product Certificates: Signed by manufacturers of woodwork certifying that products furnished comply with requirements.

G. Certificates: Prior to delivery to project site, furnish WI Certified Compliance Program (WI CCP) Certificate certifying the shop drawings and products furnished for this project meet the grade requirements.

1.04 QUALITY ASSURANCE

A. Installer Qualifications: An experienced installer who has completed architectural woodwork similar in material, design, and extent to that indicated for this Project and whose work has resulted in construction with a record of successful in-service performance.

B. Fabricator Qualifications: A firm experienced in producing architectural woodwork similar to that indicated for this Project and with a record of successful in-service performance, as well as sufficient production capacity to produce required units.

C. Quality Standard: Unless otherwise indicated, comply with the NAAWS for grades of interior architectural woodwork, construction, finishes, and other requirements.

1. Provide WI CCP certificate indicating that woodwork complies with requirements of grades specified.
2. Provide WI CCP certificate for installation.
3. The Contract Documents contain selections chosen from options in the quality standard and additional requirements beyond those of the quality standard. Comply with such selections and requirements in addition to the quality standard.

D. Fire-Test-Response Characteristics: Where fire-retardant materials or products are indicated, provide materials and products with specified fire-test-response characteristics as determined by testing identical products per test method indicated by UL, ITS, or another testing and inspecting agency acceptable to authorities having jurisdiction. Identify with appropriate markings of applicable testing and inspecting agency in the form of separable paper label or, where required by authorities having jurisdiction, imprint on surfaces of materials that will be concealed from view after installation.

E. All products shall be in compliance with SCAQMD controlling use of VOC and shall have no formaldehyde release.

F. Rainforest woods shall not be used.

1.05 DELIVERY, STORAGE, AND HANDLING

A. Do not deliver woodwork until painting and similar operations that could damage woodwork have been completed in installation areas. If woodwork must be stored in other than installation areas, store only in areas where environmental conditions comply with requirements specified in "Project Conditions" Article.

1.06 PROJECT CONDITIONS

A. Environmental Limitations: Do not deliver or install woodwork until building is enclosed, wet work is complete, and HVAC system is operating and maintaining temperature and relative humidity as recommended by manufacturer during the remainder of the construction period.

B. Environmental Limitations: Do not deliver or install woodwork until building is enclosed, wet work is complete, and HVAC system is operating and will maintaining temperature between 60 and 90 degree F and relative humidity between 17 and 50 percent during the remainder of the construction period.

C. Field Measurements: Where woodwork is indicated to fit to other construction, verify dimensions of other construction by field measurements before fabrication and indicate measurements on Shop Drawings. Coordinate fabrication schedule with construction progress to avoid delaying the Work.

1. Locate concealed framing, blocking, and reinforcements that support woodwork by field measurements before being enclosed and indicate measurements on Shop Drawings.
2. Established Dimensions: Where field measurements cannot be made without delaying the Work, establish dimensions and proceed with fabricating woodwork without field measurements. Provide allowance for trimming at site, and coordinate construction to ensure that actual dimensions correspond to established dimensions.

1.07 COORDINATION

A. Coordinate sizes and locations of framing, blocking, furring, reinforcements, and other related units of Work specified in other Sections to ensure that interior architectural woodwork can be supported and installed as indicated.

B. Hardware Coordination: Coordinate builder’s (casework) hardware and distribute copies of approved hardware schedule specified in Division 08 Section 08-087100 "Door Hardware" to fabricator of architectural woodwork; coordinate Shop Drawings and fabrication with hardware requirements.

PART 2 - PRODUCTS

2.01 MATERIALS

A. General: Provide materials that comply with requirements of the WI quality standard for each type of woodwork and quality grade specified, unless otherwise indicated.

B. High-Pressure Decorative Laminate: NEMA LD 3, grades as indicated, or if not indicated, as required by woodwork quality standard.

C. Lumber Standards: Comply with applicable provisions for grading and workmanship of the NAAWS, Grade I and the requirements shown and specified, where standards conflict the more stringent shall apply. Provide lumber surfaced 4 sides (S4S) and fabricated to profiles shown. All lumber shall be kiln dried to the moisture content indicated in the NAAWS.

D. Adhesive for Bonding Plastic Laminate: As recommended by plastic laminate manufacturer for use and substrate.

1. Adhesive for Bonding Edges: Hot-melt adhesive or adhesive specified above for faces.

E. Quartz Agglomerate: Solid sheets consisting of quartz aggregates bound together with a matrix of filled plastic resin and complying with the "Physical Characteristics of Materials" Article of ANSI SS1.

F. Solid-Surfacing Material: Homogeneous solid sheets of filled plastic resin complying with material and performance requirements in ANSI Z124.3, for Type 5 or Type 6, without a pre-coated finish.

2.02 FIRE-RETARDANT-TREATED MATERIALS

A. General: Where indicated, use materials impregnated with fire-retardant chemical formulations indicated by a pressure process or other means acceptable to authorities having jurisdiction to produce products with fire-test-response characteristics specified.

1. Do not use treated material that does not comply with requirements of referenced woodworking standard or that is warped, discolored, or otherwise defective.
2. Use fire-retardant-treatment formulations that do not bleed through or otherwise adversely affect finishes. Do not use colorants in solution to distinguish treated material from untreated material.

B. Fire-Retardant-Treated Lumber and Plywood by Pressure Process: Comply with AWPA C20 (lumber) and AWPA C27 (plywood), for woodwork items indicated as fire-retardant treated. Use the following treatment type: 1. Interior Type A: Low-hygroscopic formulation.

1. Mill lumber after treatment, within limits set for wood removal that does not affect listed fire-test-response characteristics, using a woodworking plant certified by testing and inspecting agency.
2. Mill lumber before treatment and implement special procedures during treatment and drying processes that prevent lumber from warping and developing

discolorations from drying sticks or other causes, marring, and other defects affecting appearance of treated woodwork.

3. Kiln-dry material before and after treatment to levels required for untreated material.

C. Fire-Retardant-Treated Lumber and Plywood by Nonpressure Process: Apply nontoxic, water-soluble, fire-retardant treatment by dip, spray, roller, curtain coating, vacuum chamber, or soaking to achieve flame-spread rating of 25 or less and smoke-developed rating of 450 or less per ASTM E 84.

D. Fire-Retardant Particleboard: Panels complying with the following requirements, made from softwood particles and fire-retardant chemicals mixed together at time of panel manufacture to achieve flame-spread rating of 25 or less and smoke-developed rating of 25 or less per ASTM E 84.

1. For panels 3/4 inch thick and less, comply with ANSI A208.1 for Grade M-2 except for the following minimum properties: density, 45-lb/cu. ft; modulus of rupture, 1600 psi; modulus of elasticity, 300,000 psi; internal bond, 80 psi; and screw-holding capacity on face and edge, 250 lbf and 225 lbf, respectively.
2. For panels 13/16 to 1-1/4 inches thick, comply with ANSI A208.1 for Grade M-1 except for the following minimum properties: density, 44-lb/cu. ft; modulus of rupture, 1300 psi; modulus of elasticity, 250,000 psi; linear expansion, 0.50 percent; and screw-holding capacity on face and edge, 250 lbf and 175 lbf, respectively.
3. Product: Subject to compliance with requirements, provide "Duraflake FR" by Willamette Industries, Inc., or equal.

2.03 CABINET HARDWARE AND ACCESSORIES

A. General: Provide cabinet hardware and accessory materials associated with architectural cabinets.

B. Hardware Standard: Comply with BHMA A156.9 for items indicated by referencing BHMA numbers or items referenced to this standard.

C. Lock Keying: Grand Master Key system. Obtain keying instructions from Agency.

1. Provide 5 copies of each master key.
2. Provide 2 keys for each lock.

D. Butt Hinges: 2-3/4-inch, 5-knuckle stainless steel hinges made from 0.095-inch- thick metal, and as follows:

1. Semi-concealed Hinges for Flush Doors: BHMA A156.9, B01361.
2. Semi-concealed Hinges for Overlay Doors: BHMA A156.9, B01521.

E. Wire Pulls (Stainless Steel): Back mounted, 4 inches long, 5/16 inches in diameter. Mount horizontally on drawers and vertically on doors.

F. Catches: Push-in magnetic catches, BHMA A156.9, B03131.

G. Shelf Rests: BHMA A156.9, B04013.

H. Drawer Slides: Accuride or approved; side-mounted, full-extension, zinc-plated steel drawer slides with steel ball bearings, BHMA A156.9, B05091, and rated for the following loads:

1. Typical Drawer Slides: 150 lbf.
2. Pencil Drawer Slides: 75 lbf.
3. Keyboard Slide: 150 lbf.
4. Pull-out Writing Shelf Slide: 150 lbf.
5. Trash Bin Slides: 200 lbf.

I. Cabinet Locks: Meeting BHMA A156.11.

J. Grommets for Cable Passage through Countertops: Molded-plastic grommets and matching plastic caps with slot for wire passage.

1. Basis of Design: Product Subject to compliance with requirements, provide plastic grommets of size indicated by Doug Mockett and Co., Inc. or approved equal.

K. Exposed Hardware Finishes: For exposed hardware, provide finish that complies with BHMA A156.18 for BHMA finish number indicated.

1. Satin Stainless Steel: BHMA 630.

L. For concealed hardware, provide manufacturer's standard finish that complies with product class requirements in BHMA A156.9.

2.04 INSTALLATION MATERIALS

A. Furring, Blocking, Shims, and Hanging Strips: Softwood or hardwood lumber, kiln-dried to less than 15 percent moisture content.

B. Furring, Blocking, Shims, and Hanging Strips: Fire-retardant-treated softwood lumber, kiln-dried to less than 15 percent moisture content.

C. Anchors: Select material, type, size, and finish required for each substrate for secure anchorage. Provide nonferrous-metal or hot-dip galvanized anchors and inserts on inside face of exterior walls and elsewhere as required for corrosion resistance. Provide toothed-steel or lead expansion sleeves for drilled-in-place anchors.

2.05 FABRICATION, GENERAL

A. Wood Moisture Content: Comply with requirements of referenced quality standard for wood moisture content in relation to ambient relative humidity during fabrication and in installation areas.

B. Sand fire-retardant-treated wood lightly to remove raised grain on exposed surfaces before fabrication.

C. Fabricate woodwork to dimensions, profiles, and details indicated. Ease edges to radius indicated for the following:

1. Corners of Cabinets and Edges of Solid-Wood (Lumber) Members 3/4 Inch Thick or Less: 1/16 inch.
2. Edges of Rails and Similar Members More Than 3/4 Inch Thick: 1/8 inch.

3. Corners of Cabinets and Edges of Solid-Wood (Lumber) Members and Rails: 1/16 inch.

D. Complete fabrication, including assembly, finishing, and hardware application, to maximum extent possible, before shipment to Project site. Disassemble components only as necessary for shipment and installation. Where necessary for fitting at site, provide ample allowance for scribing, trimming, and fitting.

1. Notify Agency's Representative seven days in advance of the dates and times woodwork fabrication will be complete.
2. Trial fit assemblies at fabrication shop that cannot be shipped completely assembled. Install dowels, screws, bolted connectors, and other fastening devices that can be removed after trial fitting. Verify that various parts fit as intended and check measurements of assemblies against field measurements indicated on Shop Drawings before disassembling for shipment.

E. The casework system shall have the following components:

1. Drawer box construction shall be multiple dovetail drawer box joinery of solid hardwood 5/8 inch thick.
2. Cabinet frame construction shall have premium grade, hardwood construction providing a rigid structure.
3. Cabinet front and door style shall be premium grade flush overlay.
4. Cabinet core shall be veneer core plywood.
5. Cabinet top frame shall be full top frame.
6. Intermediate rear rails shall be provided.
7. Security panels and drawers are not required, but all cabinets are required to be lockable. The key system shall be based on a group master 5-pin key system in which each cabinet shall have the potential of individually keying.
8. The Design Builder shall review lock cylinders and keying schedule with the Agency.
9. Removable back panels behind drawer and cabinets are required.
10. Base cabinet shelf depth shall be split-depth using a single level or multiple levels for maximum flexibility.
11. Shelf thickness shall be 1 inch thick of maple veneer plain sliced with solid 1 inch hardwood edges (front and rear), finish to match casework.
12. Shelf clips shall be plated pin and socket.
13. Provide one label holder for each drawer and door.

The casework system shall be complete with all end panels, removable dividers and be scribed to fit irregular wall conditions. The finish of the wood systems shall match the grain and stain of building standard wood doors, wood paneling, base and miscellaneous trim pieces.

F. Shop cut openings, to maximum extent possible, to receive hardware, appliances, plumbing fixtures, electrical work, and similar items. Locate openings accurately and use templates or roughing-in diagrams to produce accurately sized and shaped openings. Sand edges of cutouts to remove splinters and burrs.

1. Seal edges of openings in countertops with a coat of varnish.

2.06 PLASTIC-LAMINATE CABINETS

A. Quality Standard: Comply with NAAWS Section10

B. Grade: Premium.

C. WI Construction Style: Style A, Frameless.

D. WI Door and Drawer Front Style: Flush overlay.

E. Laminate Cladding for Exposed Surfaces: High-pressure decorative laminate complying with the following requirements:

1. Horizontal Surfaces Other Than Tops: HGS.
2. Post-formed Surfaces: HGP.
3. Vertical Surfaces: HGS.
4. Edges: HGS.

F. Materials for Semi-exposed Surfaces: Provide surface materials indicated below:

1. Surfaces Other Than Drawer Bodies: High-pressure decorative laminate, Grade VGS.
2. Drawer Sides and Backs: Thermoset decorative overlay.
3. Drawer Bottoms: Thermoset decorative overlay.

G. Colors, Patterns, and Finishes: Provide materials and products that result in colors and textures of exposed laminate surfaces complying with the following requirements:

1. Schedule of Plastic Laminates:
   a. LP-01 Plastic Laminate
      1) Manufacturer: Wilsonart
      2) Color-texture: See separate color and materials supplement

2.07 SOLID-SURFACING-MATERIAL COUNTERTOPS

A. Quality Standard: Comply with NAAWS Section 11.

B. Solid Surface Material: Homogeneous solid sheets of filled plastic resin complying with ANSI SS1.

C. Grade: Premium.

D. Schedule of Colors, Patterns, and Finishes:

1. SS-01: Solid Surface Material – Recycled Glass Counter tops
   a. Manufacturer: Ice Stone USA
   b. Color: See separate color and materials supplement
   c. Thickness per plans; 1-1/4” nominal

2. SP-01: Solid Polymer Counter tops and panels.
   a. Manufacturer: Dupont “Corian”.

b. Color: See separate color and materials supplement
c. Thickness per plans, 1/2” minimum

E. Fabricate tops in one piece with shop-applied backsplashes and edges, unless otherwise indicated. Comply with manufacturer's written recommendations for adhesives, sealers, fabrication, and finishing.

F. Install integral sink bowls in countertops in shop.

G. Drill holes in countertops for plumbing fittings and soap dispensers in shop.

H. Bonding Adhesives for Polymer Solid Surfacing: Two part adhesive with color matching solid surfacing countertop and of type as recommended by solid surfacing countertop manufacturer for bonding solid surfacing materials together.

I. Bonding Adhesive for Solid Surface Quartz Material: 2-part epoxy adhesive, formulated specifically for bonding quartz agglomerate materials together, with an initial set time of not more than 2 hours at 21 degree C, and with a VOC content of 65 g/L or less when calculated according to 40 CFR 59, Subpart D (EPA Method 24).

1. Color: Match solid surface quartz material.

2.08 SHOP FINISHING

A. Quality Standard: Comply with NAAWS Section 05, unless otherwise indicated.

1. Grade: Provide finishes of same grades as items to be finished.

B. General: Finish architectural woodwork at fabrication shop as specified in this Section. Defer only final touchup, cleaning, and polishing until after installation.

C. Preparations for Finishing: Comply with referenced quality standard for sanding, filling countersunk fasteners, sealing concealed surfaces, and similar preparations for finishing architectural woodwork, as applicable to each unit of work.

1. Back-priming: Apply one coat of sealer or primer, compatible with finish coats, to concealed surfaces of woodwork. Apply two coats to back of paneling and to end-grain surfaces. Concealed surfaces of plastic-laminate-clad woodwork do not require back-priming when surfaced with plastic laminate, backing paper, or thermoset decorative overlay.

PART 3 - EXECUTION

3.01 PREPARATION

A. Condition woodwork to average prevailing humidity conditions in installation areas before installation.

B. Before installing architectural woodwork, examine shop-fabricated work for completion and complete work as required, including removal of packing and back-priming.

3.02 INSTALLATION

A. Quality Standard: Install all work to comply with NAAWS for the same grade specified in Part 2 of this Section for type of woodwork involved.

B. Install woodwork level, plumb, true, and straight. Shim as required with concealed shims. Install level and plumb (including tops) to a tolerance of 1/8 inch in 96 inches.

C. Scribe and cut woodwork to fit adjoining work, and refinish cut surfaces and repair damaged finish at cuts.

D. Fire-Retardant-Treated Wood: Handle, store, and install fire-retardant-treated wood to comply with recommendations of chemical treatment manufacturer, including those for adhesives used to install woodwork.

E. Anchor woodwork to anchors or blocking built in or directly attached to substrates. Secure with countersunk, concealed fasteners and blind nailing as required for complete installation. Use fine finishing nails for exposed fastening, countersunk and filled flush with woodwork and matching final finish if transparent finish is indicated.

F. Cabinets: Install without distortion so doors and drawers fit openings properly and are accurately aligned. Adjust hardware to center doors and drawers in openings and to provide unencumbered operation. Complete installation of hardware and accessory items as indicated.

1. Install cabinets with no more than 1/8 inch in 96-inch sag, bow, or other variation from a straight line.
2. Maintain veneer sequence matching of cabinets with transparent finish.
3. Fasten wall cabinets through back, near top and bottom, at ends and not more than 16 inches o.c. with No. 10 wafer-head sheet metal screws through metal backing or metal framing behind wall finish.

G. Countertops: Anchor securely by screwing through corner blocks of base cabinets or other supports into underside of countertop.

1. Align adjacent solid-surfacing-material countertops and form seams to comply with manufacturer's written recommendations using adhesive in color to match countertop. Carefully dress joints smooth, remove surface scratches, and clean entire surface.
2. Install countertops with no more than 1/8 inch in 96-inch sag, bow, or other variation from a straight line.
3. Secure backsplashes to walls with adhesive.
4. Calk space between backsplash and wall with sealant specified in Division 07 Section 07-079200, "Joint Sealants."

H. Complete the finishing work specified in this Section to extent not completed at shop or before installation of woodwork. Fill nail holes with matching filler where exposed. Apply specified finish coats, including stains and paste fillers if any, to exposed surfaces where only sealer/prime coats were applied in shop.

3.03 ADJUSTING AND CLEANING

A. Repair damaged and defective woodwork, where possible, to eliminate functional and visual defects; where not possible to repair, replace woodwork. Adjust joinery for uniform appearance.

B. Clean, lubricate, and adjust hardware.

C. Clean woodwork on exposed and semi-exposed surfaces. Touch up shop-applied finishes to restore damaged or soiled areas.

D. Restore finishes damaged during installation and construction period so no evidence remains of correction work. Return items that cannot be refinished in the field to the shop; make required alterations and refinish entire unit or provide new units.

E. Provide final protection and maintain conditions, in a manner acceptable to manufacturer, that ensures that woodwork will be without damage or deterioration at time of Final Completion.

END OF SECTION

SECTION 07 00 10

FIRESTOPPING

A. Provide firestop sealant systems as required by the California Building Code at all through penetrations, membrane penetrations, and joints in fire rated floors, roofs, and walls. This facility requires an F-rating of 2-hours for through-penetrations of floor and roof concrete slabs. Firestop sealant is not required at penetrations through walls where non-rated openings are allowed.

B. Sealant systems shown on the drawings are manufacturer's complete assemblies, and shall not have other materials substituted for those indicated.

C. Alternate systems by other manufacturers may not be substituted without prior submission in accordance with Section 01 25 01.

D. Should conditions be discovered in the field that do not allow the installation of the indicated systems in accordance with the manufacturer's requirements, the condition shall be brought to the attention of the Architect by the IOR, for determination of an appropriate alternate sealant system.

END OF SECTION

SECTION 07 18 00

PEDESTRIAN TRAFFIC COATINGS

PART 1 - GENERAL

1.1 SUMMARY

A. This Section includes Fluid-Applied Pedestrian Traffic Coating:

1. At Playground bridge and deck structure
2. Where circulation path from Playground bridge extends onto existing roof.
3. At pit under Wheelchair Lift.

1.2 SUBMITTALS

A. Product Data: For each product indicated.

B. Shop Drawings: Show extent of coating at each location specified. Include details for treating substrate joints and cracks, flashings, deck penetrations, and other termination conditions.. Shop drawings should include project specific details and be approved by manufacturer in writing prior to submission.

C. Samples for Verification: For each type of traffic coating required, prepared on rigid backing and of same thickness and material indicated for the Work:

1. Provide stepped samples on backing large enough to illustrate build-up of traffic coatings.
2. Sample warranties and installer qualifications should also be submitted.

D. Material Certificates: Signed by manufacturer certifying that traffic coatings comply with requirements, based on comprehensive testing of current product formulations within the last three years.

E. Maintenance Data: To include in maintenance manuals specified in Division 1. Identify substrates and types of traffic coatings applied. Include recommendations for periodic inspections, cleaning, care, maintenance, and repair of traffic coatings.

1.3 QUALITY ASSURANCE

A. Installer (Applicator) Qualifications: An experienced applicator who has specialized in installing work similar in material, design, and extent to that indicated for this Project and who is accepta- ble to manufacturer.

B. Source Limitations: As follows:

1. Use elastomeric coatings of a single manufacturer.
2. Obtain primary coating materials, including primers, from coating manufacturer. Obtain secondary materials including aggregates, sheet flashings, joint sealants, and substrate repair materials of type and from source recommended and accepted for warranty pur- poses by primary coating manufacturer.

C. Mockups: Architect will select one representative surface for each traffic coating and each substrate to receive traffic coatings. Apply each coating to at least 50 sq. ft. of each substrate to demonstrate surface preparation, joint and crack treatment, thickness, texture, color, and standard of workmanship:

1. Remove and reapply mockups until approved by Architect.
2. Keep approved mockups undisturbed during construction as a standard for judging com- pleted traffic coatings. Undamaged mockups may be incorporated into the Work.

D. Pre-Installation Conference: A pre-installation conference shall be held prior to commencement of field installation to establish procedures to maintain required working conditions and to coordinate this work with related and adjacent work. Verify that final waterproofing details comply with waterproofing manufacturer's current installation requirements and specification documents. Recommended attendees: General contractor, waterproofing installer, preparer of substrate to receive waterproofing, Architect, Owner, waterproofing manufacturer representative, and mechanical installers that will penetrate the waterproofing.

1.4 DELIVERY, STORAGE, AND HANDLING

A. Deliver materials in original packages and containers with seals unbroken and bearing manufacturer's labels showing the following information:

1. Manufacturer's brand name.
2. Type of material.
3. Directions for storage.
4. Date of manufacture and shelf life.
5. Lot or batch number.
6. Mixing and application instructions.
7. Color.

B. Store materials in a clean, dry location protected from exposure to direct sunlight. In storage areas, maintain environmental conditions within range recommended in writing by manufacturer.

1.5 PROJECT CONDITIONS

A. Environmental Limitations: Apply traffic coatings within the range of ambient and substrate temperatures recommended in writing by manufacturer. Do not apply traffic coatings to damp or wet substrates, when temperatures are below 40 deg F or when relative humidity exceeds 85 percent:

1. Do not apply traffic coatings in snow, rain, fog, or mist, or when such weather conditions are imminent during the application and curing period. Apply only when frost-free conditions occur throughout the depth of the substrate.
2. Ensure that curing compounds, form release agents, etc., are not used where work of this section is to occur. Contractor to verify with manufacturer of materials to be used any/all curing compounds that may be used on concrete substrates where materials will be applied. Written acceptance of curing compound is required prior to application of the coating system.

1.6 WARRANTY

A. General Warranty: Special warranty specified in this Article shall not deprive Owner of other rights Owner may have under other provisions of the Contract Documents and shall be in addition to, and run concurrent with, other warranties made by Contractor under requirements of the Contract Documents.

B. Special Warranty: Written warranty, signed by traffic coating manufacturer agreeing to repair or replace traffic coatings that do not comply with requirements or that deteriorate during the specified warranty period. Warranty does not include deterioration or failure of traffic coating due to unusual weather phenomena, failure of prepared and treated substrate, formation of new substrate cracks exceeding 1/16 inch in width, fire, vandalism, or abuse by snowplow, maintenance equipment, and truck traffic:

1. Deterioration of traffic coatings includes, but is not limited to, the following:

   a. Adhesive or cohesive failures.
   b. Abrasion or tearing failures.
   c. Surface crazing or spalling.
   d. Intrusion of water, oils, gasoline, grease, salt, deicer chemicals, or acids into deck substrate.

C. Warranty Period: Ten (10) years from date of Substantial Completion.

PART 2 - PRODUCTS

2.1 MATERIALS

A. Physical Requirements: Provide traffic coatings complying with ASTM C 957.

B. Material Compatibility: Provide primers; base, intermediate, and top coats; and miscellaneous materials that are compatible with one another and with substrate under conditions of service and application, as demonstrated by the manufacturer based on testing and field experience.

2.2 TRAFFIC COATINGS

A. Approved Manufacturer:
   1. Pedestrian Traffic Topping:

      a. PedaGard by Neogard.
      b. Or “Approved Equal”.

B. Traffic Topping Composition: Provide manufacturer’s standard flexible reinforced synthetic rubber membrane, integral flashing and neoprene-composition traffic surface.

C. Color: As selected by Architect from manufacturer’s standard colors.

D. Thickness: Approximately 3/16”.

E. Leveling Underlayment: Crossfield Products Corp. “Dex-O-Tex-26” Flooring underlayment or as approved by traffic topping manufacturer.

F. Component Coat Thicknesses: As recommended by manufacturer for substrate and service conditions indicated, but not less than a total coating thickness of 60 mils excluding aggregate.

G. Aggregate: Uniformly graded washed silica sand of particle sizes, shape, and minimum hard- ness recommended in writing by traffic coating manufacturer:

   1. Spreading Rate: As recommended by manufacturer for substrate and service

conditions indicated. Provide written documentation from manufacture that surface texture meets with all slip resistant requirements for pedestrian surfaces.

2.3 MISCELLANEOUS MATERIALS

A. Joint Sealants: Multi-component urethane sealant recommended in writing by manufacturer for substrate and joint conditions indicated and for compatibility with traffic coatings; complying with ASTM C 920, Type M, Class 25, Grade NS for sloping and vertical applications or Grade P for deck applications, and Use T where subject to traffic or Use NT elsewhere.

B. Sheet Flashing: 60-mil minimum, non-staining uncured neoprene sheet material recommended by manufacturer. To be used at all vertical to horizontal transitions over metal and different substrate types. Also to be used over leading edge of horizontal metal flanges, where they transition to vertical framed walls.

C. Adhesive: Manufacturer's recommended contact adhesive.

D. Reinforcing Strip: Manufacturer's recommended fiberglass mesh.

E. Primer: Neogard 7790 primer.

F. Aggregate: 20-30 mesh silica sand; local aggregate approved by coating manufacturer.

PART 3 - EXECUTION

3.1 EXAMINATION

A. Examine substrates, with Applicator, manufacturer, Contractor and D 7 present, for compliance with requirements and for other conditions affecting performance of traffic coatings:

1. Verify compatibility with and suitability of substrates.
2. Begin coating application only after minimum concrete curing and drying period recom- mended by traffic coating manufacturer has passed, after unsatisfactory conditions have been corrected, and after surfaces are dry.
3. Verify that substrates are visibly dry and free of moisture. Test for moisture by method recommended in writing by manufacturer.
4. Application of coating indicates acceptance of surfaces and conditions.
5. Provide written letter of acceptance prior to commencement of work of this section.

3.2 PREPARATION

A. Clean and prepare substrates according to manufacturers written recommendations to produce clean, dust-free, dry substrate for traffic coating application. Verify that all drain bodies are set flush to the deck surface so that water flow occurs directly into the drain body at all times.

B. Mask adjoining surfaces not receiving traffic coatings, deck drains, and other deck substrate penetrations to prevent spillage, leaking, and migration of coatings.

C. Concrete Substrates: Mechanically abrade concrete surfaces to a uniform profile according to ASTM D 4259. Do not acid etch. Do not use a concrete curing agent at locations to receive new coating materials:

1. Remove grease, oil, paints, and other penetrating contaminants from concrete.
2. Remove concrete fins, ridges, and other projections.
3. Remove laitance, glaze, efflorescence, curing compounds, concrete hardeners, form- release agents, and other incompatible materials that might affect coating adhesion.
4. Remove remaining loose material to provide a sound surface, and clean surfaces according to ASTM D 4258.

3.3 TERMINATIONS AND PENETRATIONS

A. Prepare vertical and horizontal surfaces at terminations and penetrations through traffic coatings and at expansion joints, drains, and sleeves according to ASTM C 1127 and manufacturer's written recommendations. Treatment of termination and penetrations should also be in accordance with Contract Document details and project specifications.

B. Provide sealant cants at penetrations and at reinforced and non-reinforced deck-to-wall butt joints.

C. Terminate edges of deck-to-deck expansion joints with preparatory base-coat strip.

D. Install neoprene sheet flashings at all deck-to-wall transitions, over metal flashing, expansion and dynamic joints, and bond to deck and wall substrates according to manufacturer's written recommendations.

3.4 JOINT AND CRACK TREATMENT

A. Prepare, treat, rout, and fill joints and cracks in substrates according to ASTM C 1127 and traffic coating manufacturer's written recommendations. Before coating surfaces, remove dust and dirt from joints and cracks according to ASTM D 4258:

1. Comply with recommendations in ASTM C 1193 for joint-sealant installation.

3.5 TRAFFIC COATING APPLICATION

A. Apply traffic coating material according to ASTM C 1127 and manufacturer's written recommendations to achieve a total mil thickness of **60 mils** at standard traffic locations and **72 mils** at high traffic areas, exclusive of aggregate:

1. Start traffic coating application in presence of manufacturer's technical representative.
2. Verify that wet film thickness of each component coat complies with requirements every 100 sq. ft.
3. Apply traffic coatings to prepared wall terminations and vertical surfaces to height indicated or manufacturer’s minimum heights if not indicated in drawings and omit aggregate on vertical surfaces.

B. Broadcast aggregate into wet coating at the rate of 12-½ pounds per gallon of wet coating as required by the manufacturer to achieve the required Moth’s scale for pedestrian traffic areas. Back roll the aggregate into the wet coating to lock it into place so that no loose material is left. Blow off all excess aggregate upon completion of cure time.

3.6 CURING AND PROTECTING

A. Cure traffic coatings according to manufacturer's written recommendations. Prevent contamination and damage during application and curing stages.

B. Protect traffic coatings from damage and wear during remainder of construction period.

END OF SECTION

SECTION 07 54 19

PVC ROOF PATCHING

PART 1 - GENERAL

1.1 SUMMARY

A. Section Includes:

1. Patching of adhered thermoplastic PVC roofing system on concrete deck, including:

2. Roof insulation.

3. Roof insulation cover board.

4. Walkway material.

B. Related Sections:

1. Division 07 Section "Sheet Metal Flashing and Trim" for shop-formed sheet metal items including roof drainage system items, roof penetration flashings, base and counterflashings and reglets, and formed copings and roof edge metal items.

1.2 DEFINITIONS

A. Roofing Terminology: Refer to ASTM D1079 "Standard Terminology Relating to Roofing and Waterproofing" and glossary in applicable edition of NRCA's "The NRCA Roofing Manual: Membrane Roof Systems" for definition of terms related to roofing work in this Section.

1.3 PREINSTALLATION MEETINGS

A. Preinstallation Roofing Conference: Conduct conference at Project site.

1. Meet with Owner, Architect, Owner's Consultant, testing and inspecting agency representative, roofing Installer, roofing system manufacturer's representative, and installers whose work interfaces with or affects roofing, including installers of roof accessories and roof-mounted equipment.

2. Review drawings and specifications.

3. Review methods and procedures related to roofing installation, including manufacturer's written instructions.

4. Review and finalize construction schedule and verify availability of materials, Installer's personnel, equipment, and facilities needed to make progress and avoid delays.

5. Examine substrate conditions and finishes for compliance with requirements, including flatness and fastening.

6. Review base flashings, special roofing details, roof drainage, roof penetrations, equipment curbs, and condition of other construction that will affect roofing system.

7. Review governing regulations and requirements for insurance and certificates if applicable.

8. Review temporary protection requirements for roofing system during and after installation.

9. Review roof observation and repair procedures after roofing installation.

1.4 ACTION SUBMITTALS

A. Product Data: For each type of product indicated.

B. Shop Drawings: For roofing system. Include plans, elevations, sections, details, and attachments to other work.

1. Base flashings and membrane terminations.

a. Indicate details meet requirements of NRCA and FMG required by this Section.

1.5 INFORMATIONAL SUBMITTALS

A. Contractor's Product Certificate: Submit certificate, indicating products intended for Work of this Section, including product names and numbers and manufacturers' names, with statement indicating that products to be provided meet the requirements of the Contract Documents.

B. Qualification Data: For Installer, Manufacturer and Roofing Inspector.

1. Include letter from Manufacturer written for this Project indicating approval of Installer.

C. Manufacturer Certificates: Signed by roofing manufacturer certifying that roofing system complies with requirements.

1. Submit evidence of compliance with performance requirements.

a. Include: UL listing certificate.

2. Product Compatibility: Indicate manufacturer has verified compatibility of roofing system components, including but not limited to: Roofing membrane, flashing sheets, adhesives, and sealants.

D. Product Test Reports: Based on evaluation of comprehensive tests performed by manufacturer and witnessed by a qualified testing agency, for components of membrane roofing system.

E. Warranties: Unexecuted sample copies of special warranties.

F. Inspection Reports: Reports of Roofing Inspector. Include weather conditions, description of work performed, tests performed, defective work observed, and corrective actions taken to correct defective work.

1.6 CLOSEOUT SUBMITTALS

A. Executed copies of warranties.

1.7 QUALITY ASSURANCE

A. Installer Qualifications: An employer of workers trained and certified by manufacturer, including a full-time on-site supervisor with a minimum of five years' experience installing products comparable to those specified, able to communicate verbally with Contractor, Architect, and employees, and qualified by the manufacturer to install manufacturer's product and furnish warranty of type specified.

B. Manufacturer Qualifications: Approved manufacturer listed in this Section, UL listed for roofing systems comparable to that specified for this Project, with minimum five years' experience in manufacture of thermoplastic roof membrane products in successful use in similar applications.

1. Manufacturer and products shall match existing roof system in place.

C. Roofing Inspector Qualifications: A technical representative of manufacturer and experienced in the installation and maintenance of the specified roofing system, qualified to perform roofing observation and inspection specified in Field Quality Control Article, to determine Installer's compliance with the requirements of this Project, and approved by the manufacturer to issue warranty certification. The Roofing Inspector shall be one of the following:

1. An authorized full-time technical employee of the manufacturer.

D. Manufacturer's Installation Instructions: Obtain and maintain on-site access to manufacturer's written recommendations and instructions for installation of products.

1.8 DELIVERY, STORAGE, AND HANDLING

A. Deliver roofing materials to Project site in original containers with seals unbroken and labeled with manufacturer's name, product brand name and type, date of manufacture, approval or listing agency markings, and directions for storing and mixing with other components.

B. Store liquid materials in their original undamaged containers in a clean, dry, protected location and within the temperature range required by roofing system manufacturer. Protect stored liquid material from direct sunlight.

1. Discard and legally dispose of liquid material that cannot be applied within its stated shelf life.

C. Protect roof insulation materials from physical damage and from deterioration by sunlight, moisture, soiling, and other sources. Store in a dry location. Comply with insulation manufacturer's written instructions for handling, storing, and protecting during installation.

D. Handle and store roofing materials and place equipment in a manner to avoid permanent deflection of deck.

1.9 PROJECT / FIELD CONDITIONS

A. Weather Limitations: Proceed with installation only when existing and forecasted weather conditions permit roofing system to be installed according to manufacturer's written instructions and warranty requirements.

B. Daily Protection: Coordinate installation of roofing so insulation and other components of roofing system not permanently exposed are not subjected to precipitation or left uncovered at the end of the workday or when rain is forecast.

1. Provide tie-offs at end of each day's work to cover exposed roofing and insulation with a course of roofing sheet securely in place with joints and edges sealed.

2. Complete terminations and base flashings and provide temporary seals to prevent water from entering completed sections of roofing.

3. Remove temporary plugs from roof drains at end of each day.

4. Remove and discard temporary seals before beginning work on adjoining roofing.

1.10 WARRANTY

A. Manufacturer's Warranty: Roof System Manufacturer's standard form in which Manufacturer agrees to repair or replace components of roofing system that fail in materials or workmanship within warranty period, as follows.

1. Form of Warranty: Manufacturer's standard warranty form.

2. Scope of Warranty: Work of this Section and including sheet metal details and termination details installed by the roof system Installer and approved by the Roof System Manufacturer.

3. Warranty Period: to match the 20 year warranty of the original roof installation.

B. Manufacturer Inspection Services: By manufacturer's technical representative, to report maintenance responsibilities to Owner necessary for preservation of Owner's warranty rights.

1. Inspections to occur in following years: 2, 5, 10, 15 following completion.

C. Installer Warranty: Installer's warranty signed by Installer, as follows.

1. Form of Warranty: Form acceptable to Roofing Manufacturer and Owner.

2. Scope of Warranty: Work of this Section.

3. Warranty Period: 2 years from date of completion.

PART 2 - PRODUCTS

2.1 MANUFACTURERS

A. Basis of Design: The roof system specified in this Section is based upon products of Tremco, Inc., Beachwood, OH, (800) 562-2728, www.tremcoroofing.com that are named in other Part 2 articles. Provide specified products.

1. Verify that the existing roofing material match the specification below.

B. Source Limitations: Obtain components for roofing system from same manufacturer as membrane roofing or manufacturer approved by membrane roofing manufacturer.

2.2 PERFORMANCE REQUIREMENTS

A. General Performance: Installed membrane roofing and base flashings shall withstand specified uplift pressures, thermally induced movement, and exposure to weather without failure due to defective manufacture, fabrication, installation, or other defects in construction. Membrane roofing and base flashings shall remain watertight.

1. Accelerated Weathering: Roofing system shall withstand 10,000 hours of exposure when tested according to ASTM G152, ASTM G154, or ASTM G155.

2. Impact Resistance: Roof membrane shall resist impact damage when tested according to ASTM D3746/D3746M, ASTM D4272/D4272M, or the "Resistance to Foot Traffic Test" in FM Approvals 4470.

B. Roofing System Design: Provide membrane roofing system that is identical to systems that have been successfully tested by a qualified testing and inspecting agency in accordance with ANSI/FM 4474, UL 580, or UL 1897, and to resist uplift pressures calculated in accordance with ASCE-7 and applicable code.

1. All Zones (Corner, Perimeter, and Field-of-Roof) Uplift Pressures: As indicated on Drawings.

C. SPRI Wind Design Standard: Manufacture and install copings and roof-edge flashings tested according to ANSI/SPRI ES-1.

1. Design Pressure: As indicated on Drawings.

D. Flashings and Fastening: Comply with requirements of Division 07 Sections “Sheet Metal Flashing and Trim” and “Roof Specialties.” Provide base flashings, perimeter flashings, detail flashings and component materials and installation techniques that comply with requirements and recommendations of the following:

1. FM Global 1-49: Loss Prevention Data Sheet for Perimeter Flashings.

2. FM Global 1-29: Loss Prevention Data Sheet for Above Deck Roof Components.

3. NRCA Roofing Manual (Sixth Edition) for construction details and recommendations.

4. SMACNA Architectural Sheet Metal Manual (Seventh Edition) for construction details.

E. Exterior Fire-Test Exposure: ASTM E108, Class A; for application and roof slopes indicated, as determined by testing identical membrane roofing materials by a qualified testing agency. Materials shall be identified with appropriate markings of applicable testing agency.

F. Energy Performance: Roofing system shall have an initial solar reflectance index of not less than 0.70 and an emissivity of not less than 0.75 when tested according to CRRC- 1.

2.3 MATERIALS, GENERAL

A. Material Compatibility: Roofing materials shall be compatible with one another and adjacent materials under conditions of service and application required, as demonstrated by roof membrane manufacturer based on testing and field experience.

2.4 THERMOPLASTIC MEMBRANE MATERIALS

A. PVC Roof Membrane:

1. Thermoplastic PVC/TPA sheet, internally fabric reinforced, and fleece backed, Energy Star qualified, CRRC listed, and California Title 24 Energy Code compliant, ASTM D4434 Type IV.

a. Basis of design product: Tremco, TPA FB Single Ply Roof Membrane.

b. Tensile Strength at 0 deg. F (-18 deg. C), minimum, ASTM D751: 350 lbf/in (1550 N).

c. Tear Strength at 77 deg. F (25 deg. C), minimum, ASTM D751: 100 lbf (440 N).

d. Elongation at 0 deg. F (-18 deg. C), minimum at fabric break, ASTM D751: 35 percent machine direction, 33 percent cross-machine direction.

e. Minimum Thickness, nominal, ASTM D751: 0.060 in (1.5 mm).

f. Color: White.

g. Solar Reflectance Index (SRI), ASTM E1980: 108 (White, initial); 84 (White, 3-year aged).

h. Recycled Content, minimum: 25 percent pre-consumer.

B. Membrane Flashing: Manufacturer's standard, smooth-backed, sheet flashing of same material, type, reinforcement, thickness, and color as PVC sheet membrane.

2.5 AUXILIARY ROOFING MATERIALS

A. General: Auxiliary membrane roofing materials recommended by roofing system manufacturer for intended use, and compatible with membrane roofing.

1. Liquid-type auxiliary materials shall comply with VOC limits of authorities having jurisdiction.

2. Adhesives and sealants that are not on the exterior side of weather barrier shall comply with the following limits for VOC content when calculated according to 40 CFR 59, Subpart D (EPA Method 24):

a. Plastic Foam Adhesives: 50 g/L.

b. Single-Ply Roof Membrane Sealants: 450 g/L.

c. Nonmembrane Roof Sealants: 300 g/L.

d. Sealant Primers for Nonporous Substrates: 250 g/L.

e. Sealant Primers for Porous Substrates: 775 g/L.

3. Adhesives and sealants that are not on the exterior side of weather barrier shall comply with the testing and product requirements of the California Department of Public Health's

(formerly, the California Department of Health Services') "Standard Method for the Testing and Evaluation of Volatile Organic Chemical Emissions from Indoor Sources Using Environmental Chambers."

B. Membrane Adhesive:

1. Bonding adhesive, water-based low-VOC, for bonding TPA fleece-backed and TPO fleece-backed single ply membranes and flashings to substrates.

a. Basis of design product: Tremco, Fleece Back WB Single Ply Bonding Adhesive.

b. VOC, maximum, ASTM D3960: 178 g/L.

C. Flashing Membrane Adhesive:

1. Bonding adhesive, contact-type solvent-based low VOC, for bonding TPA non- fleece-backed single ply membranes and flashings to substrates.

a. Basis of design product: Tremco, TPA LV Single Ply Bonding Adhesive.

b. VOC, maximum, ASTM D3960: 200 g/L.

D. Metal Termination Bars: Manufacturer's standard, predrilled stainless-steel or aluminum bars, approximately 1 by 1/8 inch (25 mm by 3 mm) thick; with anchors.

E. Joint Sealant: Elastomeric joint sealant compatible with roofing materials, with movement capability appropriate for application.

F. Prefabricated Pipe Flashings: As recommended by roof membrane manufacturer.

G. Miscellaneous Accessories: Provide pourable sealers, preformed cone and vent sheet flashings, preformed inside and outside corner sheet flashings, T-joint covers, lap sealants, termination reglets, and other accessories.

2.6 ROOF INSULATION MATERIALS

A. General: Preformed roof insulation boards manufactured or approved by roofing manufacturer, selected from insulation manufacturer's standard sizes, suitable for application, and of thicknesses indicated.

1. Tapered Insulation: Provide factory-tapered insulation boards fabricated to slope of 1/4 inch per 12 inches (1:48) unless otherwise indicated.

2. Provide preformed saddles, crickets, tapered edge strips, and other insulation shapes where indicated for sloping to drain. Fabricate to slopes indicated, not less than two times the roof slope.

B. Roof Insulation: Provide roof insulation product in thicknesses indicated in Part 3 as follows:

1. Board Insulation, Polyisocyanurate: CFC- and HCFC- free, with recycled content glass-fiber mat facer on both major surfaces, ASTM C1289 Type II Class 1.

a. Basis of design product: Tremco, Trisotech Insulation.

b. Compressive Strength, ASTM D1621: Grade 2: 20 psi (138 kPa).

c. Conditioned Thermal Resistance at 75 deg. F (24 deg. C): 14.4 at 2.5 inches (50.8 mm) thick.

2.7 ROOF INSULATION ACCESSORIES

A. Cover Board:

1. Gypsum panel, glass-mat-faced, primed, ASTM C1177/C1177M.

a. Basis of design product: Tremco/GP Gypsum DensDeck Prime.

b. Thickness: 1/4 inch (6 mm).

B. Roof Insulation Adhesive:

1. Urethane adhesive, bead-applied, low-rise two-component solvent-free low odor, formulated to adhere roof insulation to substrate.

a. Basis of design product: Tremco, Low Rise Foam Insulation Adhesive.

b. Flame Spread Index, ASTM E84: 10.

c. Smoke Developed Index, ASTM E84: 30.

d. Volatile Organic Compounds (VOC), maximum, ASTM D3960: 0 g/L.

e. Tensile Strength, minimum, ASTM D412: 250 psi (1720 kPa).

f. Peel Adhesion, minimum, ASTM D903: 17 lbf/in (2.50 kN/m).

g. Flexibility, 70 deg. F (39 deg. C), ASTM D816: Pass.

C. Insulation Cant Strips: ASTM C208, Type II, Grade 1, cellulosic-fiber insulation board.

D. Wood Cant Strips: Comply with requirements in Division 06 rough carpentray Section.

E. Tapered Edge Strips: ASTM C208, Type II, Grade 1, cellulosic-fiber insulation board.

F. Substrate Joint Tape: 6- or 8-inch- (150- or 200-mm-) wide, coated, glass fiber.

PART 3 - EXECUTION

3.1 EXAMINATION

A. Examine substrates, areas, and conditions, with Installer present, for compliance with the following requirements and other conditions affecting performance of roofing system:

1. Verify that roof openings and penetrations are in place and curbs are set and braced and that roof drain bodies are securely clamped in place.

2. Verify that wood cants, blocking, curbs, and nailers are securely anchored to roof deck at penetrations and terminations and that nailers match thicknesses of insulation.

3. Concrete Roof Deck:

a. Verify that minimum concrete drying period recommended by roofing system manufacturer has passed.

b. Verify that concrete substrate is visibly dry and free of moisture. Test for capillary moisture by plastic sheet method according to ASTM D4263.

c. Verify that concrete curing compounds that will impair adhesion of roofing components to roof deck have been removed.

B. Proceed with installation only after unsatisfactory conditions have been corrected.

3.2 PREPARATION

A. Trim back edges of existing roofing at removed areas to provide clean straight edges that will allow proper butting and lapping of materials.

B. Clean substrate of dust, debris, moisture, and other substances detrimental to roofing installation according to roofing system manufacturer's written instructions. Remove sharp projections.

C. Prevent materials from entering and clogging roof drains and conductors and from spilling or migrating onto surfaces of other construction. Remove roof-drain plugs when no work is taking place or when rain is forecast.

D. Complete terminations and base flashings and provide temporary seals to prevent water from entering completed sections of roofing system at the end of the workday or when rain is forecast. Remove and discard temporary seals before beginning work on adjoining roofing.

E. Prime surface of concrete deck with manufacturer's recommended primer at rate required by manufacturer and allow primer to dry.

3.3 PATCHING INSTALLATION, GENERAL

A. Install roofing system patches in accordance with manufacturer’s written instructions and approved details.

B. NRCA Installation Details: Install roofing system in accordance with applicable NRCA Manual Plates and NRCA recommendations; modify as required to comply with manufacturer's approved details and perimeter fastening requirements of FM Global references if applicable.

3.4 INSULATION INSTALLATION

A. Coordinate installing membrane roofing system components so insulation is not exposed to precipitation or left exposed at the end of the workday.

B. Comply with membrane roofing system and insulation manufacturer's written instructions for installing roof insulation.

C. Tapered Insulation and Crickets: Install tapered insulation under area of roofing as required to match existing slopes.

D. Install insulation under area of roofing to achieve required thickness. Where overall insulation thickness is 2.7 inches (70 mm) or greater, install two or more layers with joints of each succeeding layer staggered from joints of previous layer a minimum of 6 inches (150 mm) in each direction.

1. Tapered Insulation System for Flat Roof Deck: Install insulation as follows:

   a. Minimum total thickness of Continuous Insulation: 3.5” put in 2 layers

      1) Minimum thickness of base layer: 2” put in 2 layers

      2) Minimum thickness of each subsequent layer: 1.5”

      3) Provide drawings and install taper per manufacturer recommendations.

   b. Minimum Insulation Average R-30

E. Install insulation with long joints of insulation in a continuous straight line with end joints staggered between rows, abutting edges and ends between boards. Fill gaps exceeding 1/4 inch (6 mm) with insulation.

1. Cut and fit insulation within 1/4 inch (6 mm) of nailers, projections, and penetrations.

F. Adhered Insulation: Install each layer of insulation and adhere to substrate as follows:

1. Prime substrate with primer as recommended by manufacturer and allow to dry.

2. Set each layer of insulation in ribbons of bead-applied insulation adhesive, firmly pressing and maintaining insulation in place.

G. Cover Boards: Install cover boards over insulation with long joints in continuous straight lines with end joints staggered between rows. Offset joints of insulation below a minimum of 6 inches (150 mm) in each direction. Loosely butt cover boards together.

1. Secure cover boards to resist uplift pressure at corners, perimeter, and field of roof.

2. Adhere cover boards by setting in ribbons of bead-applied insulation adhesive, firmly pressing and maintaining cover board in place.

3.5 ADHERED MEMBRANE ROOFING INSTALLATION

A. Adhere membrane roofing over area to receive roofing and install according to membrane roofing system manufacturer's written instructions.

B. Start installation of membrane roofing in presence of membrane roofing system manufacturer's technical personnel.

C. Accurately align membrane roofing and maintain uniform side and end laps of minimum dimensions required by manufacturer. Stagger end laps.

D. Water-Based Bonding Adhesive: Apply to substrate at rate required by manufacturer. Install membrane immediately into adhesive, avoiding any air entrapment; do not allow adhesive to dry. Roll membrane into wet adhesive. Do not apply adhesive to splice area of membrane.

E. Apply membrane roofing with side laps shingled with slope of roof deck where possible.

F. Welded Seams: Clean seam areas, overlap membrane roofing, and hot-air weld side and end laps of membrane roofing and sheet flashings according to manufacturer's written instructions to ensure a watertight seam installation.

1. Test lap edges with probe to verify seam weld continuity. Apply lap sealant to seal cut edges of sheet membrane.

2. Verify field strength of seams a minimum of twice daily and repair seam sample areas.

3. Repair tears, voids, and lapped seams in roofing that does not comply with requirements.

G. Spread sealant bed over deck drain flange at roof drains and securely seal membrane roofing in place with clamping ring.

3.6 BASE FLASHING INSTALLATION

A. Install sheet flashings and preformed flashing accessories and adhere to substrates according to membrane roofing system manufacturer's written instructions.

B. Apply bonding adhesive to substrate and underside of sheet flashing at required rate and allow to partially dry. Do not apply to seam area of flashing.

C. Flash penetrations and field-formed inside and outside corners with cured or uncured sheet flashing.

D. Clean seam areas, overlap, and firmly roll sheet flashings into the adhesive. Hot-air weld side and end laps to ensure a watertight seam installation.

E. Seal top termination of base flashing with a metal termination bar and a continuous bead of joint sealant.

3.7 FIELD QUALITY CONTROL

A. Roofing Inspector: Contractor will engage a qualified roofing inspector to perform roof tests and inspections and to prepare test reports.

B. Final Roof Inspection: Arrange for roofing system manufacturer's technical personnel to inspect roofing installation on completion.

C. Repair or remove and replace components of membrane roofing system where inspections indicate that they do not comply with specified requirements.

D. Additional inspections, at Contractor's expense, will be performed to determine compliance of replaced or additional work with specified requirements.

3.8 PROTECTING AND CLEANING

A. Protect membrane roofing system from damage and wear during remainder of construction period. When remaining construction will not affect or endanger roofing, inspect roofing for deterioration and damage, describing its nature and extent in a written report, with copies to Architect and Owner.

B. Correct deficiencies in or remove membrane roofing system that does not comply with requirements; repair substrates; and repair or reinstall membrane roofing system to a condition free of damage and deterioration at time of Substantial Completion and according to warranty requirements.

C. Clean overspray and spillage from adjacent construction using cleaning agents and procedures recommended by manufacturer of affected construction.

END OF SECTION

SECTION 07 62 00

SHEET METAL FLASHING AND TRIM

PART 1 - GENERAL

1.1 SUMMARY

A. Section Includes:
1. Shop-fabricated or field-flashings used for roofing and flashing applications.
2. Supplementary components and accessories normally furnished or necessary for a complete installation, whether or not such items are indicated on the Drawings or included in the Specifications.

1.2 REFERENCES

A. Abbreviations and Acronyms:
1. BMT: Base Metal Thickness.msg
2. HDG: Hot-Dip Galvanized.
3. MSG: Manufacturer’s Standard Gage for Sheet Steel.
4. USSG: United States Standard Gage for Sheet.
5. NRCA: National Roofing Contractors Association.
6. SMACNA: Sheet Metal and Air Conditioning Contractors' National Association.

B. Definitions:
1. Fabricator: Means the decorative flashing fabricator, unless otherwise indicated.
2. Manufacturers' Standard Gage for Sheet Metal: Means the thickness steel sheet based on a weight of 41.82 pounds per square foot per inch of thickness.

1.3 ADMINISTRATIVE REQUIREMENTS

A. Coordination:
1. Coordinate installation of roof perimeter flashings with installation of roof drainage system.
2. Coordinate installation of counterflashing with installation of base flashings.
3. Coordinate installation of roof-penetration flashings with installation of roofing and other items penetrating roof.
4. Coordinate the installation of equipment support flashings with the installation of roofing and equipment.
5. Coordinate the installation of wall flashings with the installation of wall-opening components, including windows, doors, and louvers.

B. Delegated Design Requirements:

1. Engineer, fabricate, assemble, and install flashings that conforms to the profiles indicated and other Contract Document requirements; meets specified performance criteria; and results in structurally sound, non-corroding, and weathertight assemblies that accommodate, resist, distribute, or transfer in-service loads without incipient or

catastrophic failure.

2. Maintain visual design concept indicated, including sizes, profiles, and alignments. Deviation from visual design concept is non-conforming work and prohibited without prior written acceptance by the Architect.

C. Performance Requirements:

1. Design Pressure: Calculate in conformance with American Society of Civil Engineers/ Structural Engineering Institute publication ASCE/SEI 7, "*Minimum Design Loads and Associated Criteria for Buildings and other Structures*"..
2. Design Wind Rating:
   a. Minimum Roof Field Area: 60 pounds per square foot.
   b. Roof Perimeter Area: 90 pounds per square foot.
   c. Roof Corner Area: 120 pounds per square foot.
3. Design Negative Uplift Pressure: Coping system must conform to FMG requirements for at least a Class I-90 wind uplift rating.
4. Thermal Expansion and Contraction: Accommodate movement resulting from at least 120 deg. F ambient and 180 deg. F material surface temperature differentials (changes).
5. Dissimilar Metal Corrosion Protection: Permanently isolate metal surfaces from direct contact with incompatible materials and other potentially corrosive substrates as specified below.

D. Preinstallation Meeting:

1. Hold a meeting after submittal approval and at least 10 business days before beginning installation.
2. During the meeting, review the Contract Documents, submittals, project conditions, and installation sequence and methods, including special details and conditions that might affect installation
3. Identify and discuss adverse or unfavorable conditions detrimental to protecting stored materials or to installation; or to the quality, durability, appearance, or performance of installed flashings. Resolve each condition.
4. Finalize construction schedule.
5. Record significant discussions and distribute meeting minutes. Do not begin installation until disagreements are successfully resolved to the satisfaction of all parties.

1.4 SUBMITTALS

A. Action Submittals: Submit the following for responsive action (formal review and approval).

1. Product Data:
   a. For manufactured items, submit manufacturer's product data, specifications, and all other information necessary to show conformance to the Contract Documents, excluding material safety data sheets (MSDSs), which are returned to the Contractor without review or responsive action.
2. Shop Drawings:
   a. Submit dimensioned plans and elevations drawn to scale and showing flashing layout and types. Show locations, sizes, and extents of all items, accessories, and trim. Label manufactured items by product name.

b. Include project-specific dimensioned details drawn to scale showing profiles, shapes, joints, seams, and dimensions, including coves, miters, and corner conditions. Cross-reference details to plans and elevations.

c. Indicate method of attaching, fastening, joining, adhering, and anchoring to adjacent construction.

d. Show backings, embedments, fasteners, brackets, clips, cleats, straps, mounting devices, and other attachments.

e. Label each attachment type; indicate manufacturer's product name for each manufactured item.

f. Indicate base material and finish, fastener material and finish, and material and finish of items being fastened or attached.

B. Informational Submittals: Submit the following for information (informal review: responsive action not expected or required, except to record non-conformance with submittal requirements).

1. Delegated Design Submittals: Together with shop drawings, submit engineering calculations demonstrating conformance to the Contract Documents and all impacts of delegated design scope of work on other work.

a. Calculations must be explicit and legible and must incorporate distinct cross-references to submitted shop drawings in sufficient quantity to render the calculations readily intelligible and reviewable.

b. At a minimum, calculations must include design loads; analysis of supporting construction, including section-property computations; analysis of fasteners, anchors, attachments, and connectors; and signature and seal of the licensed professional engineer responsible for preparing them.

c. Test reports are not an acceptable substitute for calculations and are returned to the Contractor without review or responsive action, except to record non-conformance with this requirement.

2. Qualification Statements: Submit written descriptions confirming experience specified in QUALITY ASSURANCE article below.

1.5 QUALITY ASSURANCE

A. Quality Standard Requirements:

1. Design Standard: Comply with SMACNA publication "*Architectural Sheet Metal Manual*" requirements for design dimensions, geometry, metal thickness and other characteristics, and installation of flashings.

2. Installation Standard: Comply with NRCA publication "*Roofing and Waterproofing Manual*", Volume 2, "*Architectural Sheet Metal and Metal Roofing*" requirements for the design and installation of sheet metal flashing and trim items installed as part of roofing applications.

B. Qualifications:

1. Fabricator: Company or individuals must have at least 10 years' experience fabricating flashings installed on at least 100 previous projects similar to this project in size, material, design, and complexity

2. Installer: Company or individuals must have at least 5 years' experience installing flashings for at least 30 previous projects similar to this project in size, material, design, and complexity.

3. Supervisors: Individuals must have at least 7 years' experience installing flashings for at least 30 previous projects similar to this project in size, material, design, and

complexity, including at least 2 years' supervisory experience directing and leading flashing installers.

4. Engineer: Must be a licensed professional structural engineer registered to practice in California having at least 10 years' experience performing the kind of engineering services indicated for at least 20 previous projects similar to this project in size, material, design, and complexity.

C. Mockups: If an *ex-situ* exterior wall integrated mockup is required for this project, then integrate flashing into the mockup as part of the work of this specification section.

1.6 HANDLING

A. Receiving: Inspect all deliveries for deteriorated, damaged, and defective items.

1. Reject items that are not packaged in a manner that prevents damage; or that exhibit deterioration or damage or have damaged or open packaging or containers.
2. Unload and store only inspected and accepted items.

B. Storage: Store unloaded items as shipped. Furnish adequate dunnage and bracing during storage.

1. Prevent stored items from contacting the floor or ground, from soiling and staining, and from deterioration and damage.
2. If items are not stored in an enclosed location, then cover the tops and sides with securely-tied, waterproof, and breathable covers. Unvented polyethylene tarpaulins do not qualify as breathable covers and are prohibited. (due to potential accumulation of moisture beneath tarpaulin during certain environmental conditions)
3. Incline covered items to ensure maximum drainage of accumulated moisture.
4. Do not leave items uncovered where they might be exposed to weather or become wet from rain, mist, relative humidity, condensation, frost, and other sources of moisture; or exposed to other sources of deterioration and damage.

C. Handling: Handle items in a manner that that prevents damage.

D. Damaged Item Replacement: Promptly remove and replace deteriorated, damaged, or defective flashings with undamaged new flashings that do not exhibit deterioration, damage, or defects.

E. Packaging Waste Management: Do not burn or bury construction waste at the project site. Remove and legally dispose of all construction waste away from the project site.

PART 2 - PRODUCTS

2.1 SHEET METAL FLASHING AND TRIM

A. Roofing and Roof Edge Flashings and Trim:

1. Copings: Fabricate from at least 0.0359-inch BMT (MSG 20) hot-dip galvanized and galvannealed steel sheet.
2. Gravel Stops: Fabricate from at least 0.0359-inch BMT (MSG 20) hot-dip galvanized and galvannealed steel sheet.

B. Other Sheet Metal Flashings and Trim:

1. Interlocking Counterflashing: Provide same material and thickness as reglets.

2. Through-Wall Flashings: Fabricate from at least 0.0250-inch thick (USSG 24) stainless steel sheet.
3. Opening Flashings in Framed Construction: Fabricate from at least 0.0359-inch BMT (MSG 20) hot-dip galvanized and galvannealed steel sheet.
4. Equipment Support Flashings: Fabricate from at least 0.0299-inch BMT (MSG 22) hot-dip galvanized and galvannealed steel sheet.
5. Overhead-Piping Drip Pans: Fabricate from at least 0.0359-inch BMT (MSG 20) hot-dip galvanized and galvannealed steel sheet.
6. Backpans: Fabricate from at least 0.0359-inch BMT (MSG 20) hot-dip galvanized and galvannealed steel sheet, with equal coating weight on each surface, coating designation G90, not chemically treated, not oiled. Stiffen back pans as necessary to prevent “oil canning” or excessive deflection under load.
7. Flashings and Trim in Contact with Aluminum Components: Fabricate from at least 0.032-inch aluminum sheet.
8. Flashings and Trim in Contact with Concrete, Gravel, or Soil and Elsewhere Indicated: Fabricate from at least 26-ga. stainless steel Type 316 sheet.

9. Other Flashings and Trim: Unless otherwise noted, At least 24-ga. inch BMT (MSG 24) G90 Hot-dip galvanized and galvannealed steel sheet, or from at least 26- ga. stainless steel Type 316 stainless steel sheet.

C. Requisite Properties:

1. Profiles, Edge Styles, and Attachments: Indicated on the Drawings.
2. Joint Style: J2 (butt and backup plate).
3. Fabrication: Provide standard profiles from SMACNA publication “*Architectural Sheet Metal Manual*”, Chapter 1.
   a. Fabricate in sections at least 8-feet but not more than 10-feet long,
   b. Fabricate backup plates from the same material and thickness as copings.
   c. Miter corners, seal, mechanically fasten, and solder or weld watertight.
   d. All corners and transitions must be shop or factory fabricated. Corner pieces shall extend minimum 12 inches beyond corner in both directions.
   e. Only linear transitions may be field fabricated.
   f. Finish: Filed-applied duplex coating.

2.2 MATERIALS

A. HDG and Galvannealed Steel Sheet: ASTM A 653, CS Type B (commercial steel), with equal coating weight on each surface, coating weight designation (mass designation) indicated below on both surfaces.

1. Natural Finish (Galvanized): Provide material with at least a G90 coating weight, regular spangle, chemically treated (desired for humid-storage stain resistance; can still be painted; recommended for sheet that will be used unpainted), and oiled (intended as a corrosion inhibitor; sheet must be thoroughly cleaned to remove the oil prior to painting).
2. Shop-Painted Finish (Galvanized): Provide material with at least a G90 coating weight, minimized spangle, chemically treated (desired for humid-storage stain resistance; can still be painted; recommended for sheet that will be used unpainted), and oiled (for enhanced formability; sheet must be thoroughly cleaned to remove the oil prior to painting).
3. Field-Painted Finish (Galvannealed): Provide material with at least an A60 coating

weight, not chemically treated, not oiled, and mill phosphatized (paint-grip finish; provides enhanced lubricating characteristics).

B. Galvalume Steel Sheet: ASTM A 792, CS Type B (commercial steel), with at least an AZ55 coating weight designation (mass designation) on both surfaces with equal coating weight on each surface, chemically treated (desired for humid-storage stain resistance; can still be painted; recommended for sheet that will be used unpainted), and oiled (intended as a corrosion inhibitor; sheet must be thoroughly cleaned to remove the oil prior to painting).

C. Stainless Steel Sheet: ASTM A 666 (annealed and tempered), Type 304L (for welded applications) or Type 304 (for all other applications), annealed, No. 2 (half hard) temper (hardness between Rockwell B-65 and B-70; can be bent 90 degrees across the direction of rolling around a radius equal to its thickness), passivated in conformance with ASTM A 967.

1. Natural Finish: Furnish materials having a No. 2B (bright) finish.
2. Painted Finish: Furnish materials having a No. 2D (matte) finish.

D. Aluminum Sheet: ASTM B 209, Alloy 5005-H32 for anodic finishing and Alloy 3003-H14 for painted or unfinished sheet.

E. Pre-Painted Coated Steel Coil and Sheet: ASTM A 755.

1. Sheet: Hot-dip galvanized and galvannealed steel sheet.
2. Top Side Finish: 70-percent by weight liquid polyvinylidene fluoride (PVDF) coating system conforming to AAMA 2605, and consisting of a prime coat applied to a DFT of at least 0.2-mil and solid color coat applied to a DFT of at least 0.75-mil.
3. Reverse Side Finish: 0.25-mil DFT acrylic bottom side primer and polyester wash coat (backercoat).

2.3 ACCESSORIES

A. Splash Pans: Standard precast concrete units formed from at least 3,000 pounds per square inch concrete. Provide pans with rounded corners and smooth and dense surfaces, free of honeycombs.

B. Soldering Materials: As specified in Section 05 05 23. For Stainless Steel: ASTM B 32, Grade Sn60, with an acid flux of type recommended by stainless steel sheet manufacturer.

C. Fastenings: Provide backings, inserts, loose connection hardware, fasteners, anchors, attachments, connectors, and other items supplied, required, recommended, or accepted by the manufacturer for actual in-service conditions applicable to the project.

1. Where fasteners are subject to loosening or turning out from thermal and structural movements, wind loads, or vibration, use self-locking devices.
2. Reinforce framing members as required to receive fastener threads.
3. Exposed fasteners are prohibited on faces exposed to view. Provide concealed fasteners and expansion provisions.

D. Fasteners: Uncoated stainless steel gasketed screw fasteners specified in Section 05 05 23. Wood screws, annular threaded nails, self-tapping screws, self-locking rivets and blots, and other suitable fasteners designed to withstand design loads and recommended by manufacturer of primary sheet metal.

1. General:
   a. Exposed Fasteners: Where the use of exposed fasteners is unavoidable, and accepted in writing by the Architect, fastener heads must match sheet metal color by using plastic caps or factory-applied coating.
   b. Blind Fasteners: High-strength aluminum or stainless-steel rivets suitable for metal being fastened.
   c. Spikes and Ferrules: Same material as gutter; with spike with ferrule matching internal gutter width.
2. Fasteners for Stainless-Steel Sheet: Series 300 stainless steel.

E. Underlayment: Self-adhering sheet flashing underlayment specified in Section 07 65 26.

F. Sealant:
1. Exposed Sealant: Low modulus sealant specified in Section 07 92 00.
2. Concealed Sealant: Butyl sealant specified in Section 07 92 00.

G. Sealant Tape: Pressure-sensitive, 100 percent solids, gray polyisobutylene compound sealant tape with release-paper backing. Provide permanently elastic, non-sag, nontoxic, non-staining tape 1/2-inch wide and 1/8-inch thick.

H. Bituminous Coating: Cold-applied asphalt emulsion complying with ASTM D 1187.

I. Asphalt Roofing Cement: ASTM D 4586, asbestos free, of consistency required for application.

J. Other Accessories: Provide other accessories and secondary items normally furnished or necessary for a complete installation; or supplied, required, recommended, or accepted by the manufacturer for actual in-service conditions applicable to the project.

2.4 FABRICATION

A. Shop Fabrication:
1. Before beginning fabrication, apply strippable film or other temporary protection normally furnished or necessary to protect metal from deterioration and damage during fabrication.
2. Fabricate items in largest sections practicable to minimize field jointing.
3. Fabricate exposed work precise, straight, and true to line, size, and shape; plumb, level, and square within allowable tolerances; and with accurate angles and surfaces, and crisp straight edges.
4. Fabricate exposed connections with flush hairline joints, and square and true edges and corners.
5. Inside and outside corners, and changes in direction, must be fabricated watertight assemblies with mechanically-fastened and continuously welded or soldered joints.
6. Fabricate sheet metal flashing and trim in thickness or weight needed to conform to the specified performance requirements, but not less than that specified for each application and metal.
7. Form sheet metal flashing and trim without excessive oil canning, buckling, and tool marks; precise, straight, and true to line, size, shape, and levels indicated; with accurate angles and straight edges; and with exposed edges folded back to form hems.

8. Form non-expansion, but movable, joints in metal to accommodate sealant. Where lapped expansion provisions cannot be used, form expansion joints with at least one inch deep intermeshing hooked flange; fill with butyl sealant concealed within joints.
   a. Exposed fasteners are prohibited on faces exposed to view.
   b. Provide concealed fasteners and expansion provisions elsewhere.
9. Fabricate cleats and attachment devices from the same material as the item being anchored, of sizes as recommended by SMACNA publication "*Architectural Sheet Metal Manual*" for the application, but not less than thickness of metal being secured
10. Do not use graphite pencils to mark metal surfaces.

B. Fabrication Tolerances: Fabricated items must conform to the following; specified tolerances are non-cumulative.
   1. Maximum Offset between Components at Joints: 1/8-inch except that at welded joints, offset are not allowed.
   2. Maximum Deviation from Slope and Location Lines: 1/4-inch in 20 feet.

PART 3 - EXECUTION

3.1 EXAMINATION

A. Oversight: Ensure an adequate number of supervisors are present and proper supervision practices are followed at the project site before the installer begins work and at all times during installation.

B. Verification: Verify that in-place construction conforms to the manufacturer's requirements or recommendations and satisfies all other conditions that might affect the quality of installation or the durability, appearance, or performance of installed items.

C. Evaluation and Assessment:
   1. Identify project conditions that do not conform to the fabricator's instructions and other requirements and recommendations.
   2. Perform or arrange and pay costs for all remedial work necessary to correct or improve deficient conditions, without limitation, before the installer begins work.

3.2 INSTALLATION

A. General Requirements:
   1. Scribe and cope items as necessary for an accurate fit. Perform required cutting, drilling, and fitting for flashing installation.
   2. Set flashings true to line, to required levels and lines, plumb, square, and cut and fitted without warp or rack; sloped or level as required; with flush well-fitted joints; and in alignment with adjacent construction.
   3. Shim as required with concealed shims.
4. Install exposed flashings without excessive oil canning, buckling, and tool marks. Do not use graphite pencils to mark metal surfaces.
5. Provide uniform, neat seams with minimum exposure of solder, welds, and sealant.
6. Fit exposed connections accurately to form flush hairline joints. Trim to fit substrates and to result in watertight performance. Torch cutting is prohibited.
7. Install sealant tape where indicated.

B. Expansion Provisions: Provide provisions for thermal expansion.
   1. Space movement joints not more than 10 feet on center. Joints may not be located within 24 inches of corners or intersections.
   2. Where lapped expansion provisions cannot be used or would not be sufficiently watertight, form expansion joints with intermeshing hooked flanges at least one inch deep, and fill with sealant concealed within the joints.

C. Seal joints where indicated on the Drawings and as required for watertight construction.
   1. Where sealant-filled joints are used, embed hooked flanges of joint members at least one inch into the sealant. Form joints to completely conceal sealant.
   2. When ambient temperature at the time of installation is between 40 and 70 deg. F, set joint members for 50 percent movement each way. Adjust setting proportionately for installation at higher ambient temperatures. Do not install sealant-type joints at temperatures below 40 deg. F.
   3. Prepare joints and apply sealants in conformance with Section 07 92 00.

D. Soldered Joints:
   1. Soldered joints must also be mechanically fastened
   2. Clean surfaces to be soldered.
   3. Pre-tin sheet edges to at least 1-1/2 inches from the edge; reduce pre-tinning area where the pre-tinned surface might show in the completed work.
   4. Promptly remove acid flux residue from metal after tinning and soldering. Clean and neutralize in conformance with the solder manufacturer's installation instructions.
   5. Do not use torches for soldering.
   6. Heat surfaces to receive solder and flow solder into joint. Fill joint completely. Completely remove flux and spatter from exposed surfaces.

E. Special Techniques:
   1. Roof Drainage System: Install sheet metal roof drainage components as indicated to produce a complete roof drainage system conforming to the referenced standard.
   2. Roof Flashing: Install sheet metal flashing and trim in conformance with specified performance requirements, the SMACNA quality standard publication requirements. Provide concealed fasteners where possible, set units true to line, and level. Install work with laps, joints, and seams that are permanently watertight and weather resistant.
   3. Roof Edge Flashing: Anchor to resist uplift and outward forces in conformance with the SMACNA quality standard publication and recommendations. Interlock bottom edge of roof edge flashing with continuous cleat anchored to substrate at staggered 3-inch centers.
   4. Copings: Anchor to resist uplift and outward forces in conformance with the SMACNA quality standard publication requirements and recommendations and roofing requirements.
      a. Interlock exterior bottom edge of coping with continuous cleat anchored to the supporting substrate at not more than 24-inches on center.
      b. Anchor the interior leg of copings with washers and screw fasteners through slotted holes at not more than 24 inches on center.
   5. Pipe and Post Counterflashing: Install counterflashing umbrella with close-fitting collar with top edge flared for elastomeric sealant, extending a minimum of 4 inches over

base flashing. Install stainless-steel draw band and tighten.

6. Counterflashing: Insert counterflashing in reglets or receivers and fit tightly to base flashing. Extend counterflashing 4 inches over base flashing. Lap counterflashing joints a minimum of 4 inches and bed with sealant. Secure in a waterproof manner by means of snap-in installation and sealant.
7. Roof-Penetration Flashing: Seal with elastomeric sealant and clamp flashing to pipes that penetrate roof. All penetrations must receive umbrella flashings.
8. Wall Flashing: Install sheet metal wall flashing as indicated, and to intercept and exclude penetrating moisture in conformance with the referenced standard's recommendations.
9. Opening Flashing in Frame Construction: Install continuous head, sill, jamb, and similar flashings to extend beyond wall openings as indicated on the shop drawings.
10. Miscellaneous Flashing:
    a. Equipment Support Flashing: Weld or seal flashing with elastomeric sealant to equipment support members.
    b. Overhead-Piping Safety Pans: Suspend pans independent from structure above as indicated. Pipe and install drain lines to plumbing waste or drainage system as indicated on the plumbing drawings.

F. Interface with Adjacent Items:
1. Provide materials, components, and accessories normally furnished or necessary to securely attach flashing to supporting construction.
2. Provide provisions for thermal and structural movement.
3. Space cleats not more than 12 inches apart. Anchor each cleat with at least 2 fasteners. Bend tabs over fasteners.

G. Installation Tolerances: Shim and align flashing within an installed tolerance of 1/4-inch in 20 feet on slope and location lines indicated, and within 1/8-inch offset of adjoining faces and of alignment of matching profiles.

3.3 CORRECTION AND REPAIR

A. Non-conforming, damaged, and defective work must be brought into conformance with the Contract Documents. Correct and repair as necessary, without limitation, including

arranging all correction and repair work and paying all correction and repair costs, until accepted in writing by the Architect.

B. Corrective and repair work must be performed in conformance with a correction and repair plan submitted to and accepted in writing by the Architect before correction or repair work begins. At a minimum, correction and repair plans must include
1. written descriptions of non-conforming, damaged, and defective work;
2. supporting sketches, diagrams, photographs, and other visual depictions of non-conforming, damaged, and defective work; and
3. similar written descriptions and visual depictions of Contractor-proposed corrections and repairs.

C. Arrange and pay costs for removing and replacing work that cannot be corrected or repaired to the Architect's acceptance.

3.4 CLEANING

A. Cleaning Work: After installation, correction, and repair are complete, remove strippable film or other temporary protection. Promptly remove from exposed metal surfaces anything that might interfere with uniform oxidation or weathering.

1. Use cleaning materials, equipment, and accessories supplied, and means, methods, techniques, and procedures required, recommended, or accepted by the manufacturer.
2. Do not use cleaning materials or procedures known to change, or that might change, the appearance of exposed finishes or adjacent surfaces; or cause deterioration or damage to exposed finishes or adjacent surfaces.
3. Protect adjacent surfaces not being cleaned from staining, deterioration, damage, or other detrimental effects caused by cleaning.
4. Arrange and pay costs for removing and replacing work that cannot be cleaned to the Architect's acceptance.

B. Waste Management: After completing the work of this specification section, leave work areas free from debris, waste, scrap, equipment, tools, and other items.

C. Waste Management: After completing the work of this specification section, leave work areas free from debris, waste, scrap, equipment, tools, and other items.

3.5 PROTECTION

A. Protect installed flashing in place from deterioration and damage until Substantial Completion.

B. Do not store anything on, adjacent to, or against installed flashings unless they are protected from damage. Do not use installed flashings as work surfaces.

C. Remove protection when it's no longer needed and before Substantial Completion.

END OF SECTION

SECTION 07 92 00

JOINT SEALANTS

PART 1 - GENERAL

1.1 SUMMARY

A. Section Includes:
1. Exterior joint sealants.
2. Specialty joint sealants.
3. Interior joint sealants.
4. Joint sealant backings.
5. Tape sealants.
6. Surface preparation.
7. Site tests and inspections.
8. Supplementary components and accessories normally furnished or necessary for a complete installation, whether or not such items are indicated on the Drawings or included in the Specifications.

1.2 REFERENCES

A. Definitions:
1. Manufacturer: Means the sealant manufacturer, unless otherwise indicated.
2. Ultra-Low Modulus: Means having a joint movement extension/compression capability of at least a 100-percent increase and at least a 50-percent decrease, when tested in conformance with ASTM C 719.
3. Low Modulus: Means having a joint movement extension/compression capability of at least a 50-percent increase and at least a 50-percent decrease, when tested in conformance with ASTM C 719.
4. Medium Modulus: Means having a joint movement extension/compression capability of at least a 35-percent increase and at least a 35-percent decrease, when tested in conformance with ASTM C 719.
5. High Modulus: Means having a joint movement extension/compression capability of at least a 25-percent increase and at least a 25-percent decrease, when tested in conformance with ASTM C 719.
6. Very High Modulus: Means having a joint movement extension/compression capability of at least a 12.5-percent increase and at least a 12.5-percent decrease, when tested in conformance with ASTM C 719.

1.3 ADMINISTRATIVE REQUIREMENTS

A. Coordination:
1. Proposed substitution requests and submittals that change the quality (grade) or generic chemistry of specified sealants are prohibited and returned to the Contractor without review or responsive action, except to record non-conformance with this requirement.

B. Performance Requirements:
   1. Joint sealants must establish and maintain a continuous watertight seal without staining substrates or deterioration.
   2. Sealants installed in contact with porous substrates must demonstrate testing in conformance with ASTM C 1248 resulting in no staining to porous materials identical to those indicated for this project.

C. Scheduling: Schedule cleaning to prevent dust and other contaminants from falling on freshly-applied coatings.

1.4 SUBMITTALS

A. Action Submittals: Submit the following for responsive action (formal review and approval).
   1. Product Data:
      a. Submit manufacturer's product data, specifications, and all other information necessary to show conformance to the Contract Documents, excluding material safety data sheets (MSDSs), which are returned to the Contractor without review or responsive action.
      b. Submit sample warranties with warranty periods, terms, conditions, exclusions, and remedies explicitly defined for each warranty, including clear warranty period start dates. (e.g., date of manufacture, purchase, installation, Beneficial Occupancy, Substantial Completion, Final Completion, etc.)

B. Informational Submittals: Submit the following for information (informal review: responsive action not expected or required, except to record non-conformance with submittal requirements).
   1. Manufacturer's Instructions: Submit manufacturer-prepared published instructions for proper installation of furnished joint sealants .
      a. If manufacturer's instructions are unavailable or do not apply to specific project conditions, then consult the manufacturer's representative and obtain project-specific supplemental instructions printed on manufacturer's letterhead.
      b. Promptly distribute supplemental instructions to the Architect, who may have comments that lead to contract modifications or minor changes in the work.
   2. Qualification Statements: Submit written descriptions confirming experience specified in QUALITY ASSURANCE article below.

1.5 QUALITY ASSURANCE

A. Source Limitations:
   1. Joint sealants must be obtained through one source from the same manufacturer (to ensure compatibility and a uniform appearance).
      a. Certain items may be obtained from more than one manufacturer, but only when used for separate installations.
      b. Items provided for each different installation must be obtained from the same source and manufacturer.
   2. Provide secondary materials, components, accessories and other items from sources required, recommended, or accepted by the primary manufacturer for actual in- service conditions applicable to the project.

B. Qualifications:

1. Manufacturer: Company or individuals must have at least 10 years' experience manufacturing sealants installed on at least 200 previous projects similar to this project in size, material, design, and complexity.
2. Installer: Company or individuals must have at least 5 years' experience installing joint sealants for at least 30 previous projects similar to this project in size, material, design, and complexity. Installers and supervisors must be
3. Supervisors: Individuals must have at least 7 years' experience installing joint sealants for at least 30 previous projects similar to this project in size, material, design, and complexity, including at least 2 years' supervisory experience directing and leading joint sealant installers.

1.6 HANDLING

A. Receiving: Inspect all deliveries for deteriorated, damaged, and defective items.

1. Reject items that are not packaged in a manner that prevents damage; or that exhibit deterioration or damage or have damaged or open packaging or containers.
2. Unload and store only inspected and accepted items.

B. Storage: Store unloaded items as shipped and in conformance with manufacturer's instructions and other requirements and recommendations for storage.

C. Handling: Handle items in conformance with manufacturer's instructions and other requirements and recommendations, and in a manner that that prevents damage.

1. Avoid damage to packaging and containers, and contamination of contents.
2. Rotate inventory; do not use items the shelf life of which is expired.

1.7 PROJECT CONDITIONS

A. Ambient Conditions: Install joint sealants only when ambient temperature, RH, and other environmental conditions fall within ranges required, recommended, or accepted by the manufacturer.

1. Do not install joint sealants during rain or snow, fog or mist; or when rain or snow is predicted within 24 hours of installation.
2. Proceed only when there is no threat of impending precipitation, and both current and forecasted weather conditions conform to those required, recommended, or accepted by the manufacturer.
3. Do not apply joint sealants when
   a. ambient temperature is below 45 deg. F or more than 90 deg. F during application, and for at least 8 hours after;
   b. surface temperatures are less than 40 deg. F or greater than 120 deg. F; and
   c. surface temperatures are 5 deg. F or less above the dew point.

B. Existing Conditions:

1. Surface Conditions: Surfaces receiving joint sealants must be dry. Install joint sealants only when substrate moisture content and surface temperature fall within ranges required, recommended, or accepted by the manufacturer.
2. Illumination: Provide permanent lighting or illuminate work spaces to at least the same level occurring in the room or space after Final Completion.

C. Other Conditions: Do not apply coatings where dust is generated or liquids are sprayed; or when windy conditions exist that may cause coatings to be blown onto vegetation or other unintended surfaces.

1.8 WARRANTY

A. Manufacturer Warranty: Furnish to the Owner a written manufacturer warranty for products, components, and accessories against all patent and latent defects, and incipient and catastrophic failure for 5 years (urethane sealants) and 20 years (silicone sealants).

B. Installer Guarantee: Furnish to the Owner a written guarantee for the work of this specification section against all defects in materials and workmanship for 2 years from date of acceptance. Guarantees must be properly prepared and signed on the guarantee form in Division 01.

PART 2 - PRODUCTS

2.1 EXTERIOR JOINT SEALANTS

A. Ultra-Low Modulus Single-Component Sealant:
1. Description: Neutral-curing silicone sealant conforming to ASTM C 920 requirements for Type S, Grade NS, Class 100/50, Use NT, A or O sealant, as applicable.
2. Products: Provide one of the following, or equal.
   a. “790” manufactured by Dow Corning Corp.
   b. “GE SCS 2700 SilPruf LM” manufactured by Momentive Performance Materials, Inc.
3. Colors: As selected by the Architect.

B. Low Modulus Single-Component Sealant:
1. Description: Neutral-curing silicone sealant conforming to ASTM C 920 requirements for Type S, Grade NS, Class 50, Use NT, M, G, A or O sealant, as applicable.
2. Products: Provide one of the following, or equal.
   a. “795” manufactured by Dow Corning Corp.
   b. “GE SCS 2000 SilPruf LM” manufactured by Momentive Performance Materials, Inc.
3. Colors: As selected by the Architect.

C. Butyl Sealant:
1. Description: Single-component, solvent-release plasticized polyisobutylene (butyl rubber) conforming to ASTM C 1311.
2. Application: Applied to weather seal joints between sheet metal flashings and substrates.
3. Color: Black.

2.2 SPECIALTY JOINT SEALANTS

A. Low Modulus Single-Component Porous Surface Sealant:
1. Description: Neutral-curing silicone sealant conforming to ASTM C 920 for Type S, Grade NS, Class 50, Use NT, M, G, A or O sealant, as applicable.

2. Products: Provide one of the following, or equal.
   a. “756 SMS” manufactured by Dow Corning Corp.
   b. “GE SCS 9000 SilPruf NB” manufactured by Momentive Performance Materials, Inc.
3. Colors: As selected by the Architect.

B. Single-Component Weather Barrier Sealant:
1. Application: Hidden sealant joints applied to backings of self-adhered sheet membranes and flashings.
2. Description: Silicone sealant conforming to ASTM C 920 requirements for Type S, Grade NS, Class 25.
3. Product: Provide “758” manufactured by Dow Corning Corp., or equal.
4. Color: White.

2.3 INTERIOR JOINT SEALANTS

A. Single-Component Damp Location Sealant:
1. Description: Medium or high modulus mildew-resistant silicone sealant conforming to ASTM C 920 requirements for Type S, Grade NS, Class 25, Use NT, A or O sealant, as applicable.
2. Products: Provide one of the following, or equal.
   a. “786” manufactured by Dow Corning Corp.
   b. “Sanitary SCS 1700” manufactured by Momentive Performance Materials, Inc.
3. Colors: White or clear as indicated on the Drawings or selected by the Architect.

B. General Purpose Interior Sealant:
1. Description: Siliconized acrylic-latex sealant conforming to ASTM C 834 requirements for Type OP, Grade NF classification, as required.
2. Products: Provide one of the following, or equal.
   a. “Sonneborn Sonolac” manufactured by BASF Building Systems.
   b. “AC-20+Silicone” manufactured by Pecora Corp.
   c. “Tremflex 834” manufactured by Tremco, Inc.
3. Colors: As selected by the Architect.

2.4 JOINT SEALANT BACKINGS

A. Closed Cell Foam Joint Backing:
1. Description: Extruded polyethylene foam cylindrical sealant backings conforming to ASTM C 1330, Type C.
2. Application: Provide closed-cell backer rod at all exterior applications unless otherwise indicated on the Drawings.
3. Products: Provide one of the following, or equal.
   a. “Mile High Foam” manufactured by Backer Rod Mfg. Inc.
   b. “HBR” or “Green Rod” manufactured by Nomaco, Inc.
   c. “NuFlex 870” manufactured by TVM Building Products.
4. Performance Requirements:
   a. Maximum Water Absorption: Not more than 0.10 grams per cubic centiliter when

tested in conformance with conformance with ASTM C 1016, Procedure B.

b. Minimum Density: At least 24 per cubic meter when tested in conformance with conformance with ASTM D 1622.

c. Maximum Outgassing: Less than 1 bubble when tested in conformance with conformance with ASTM D 1253.

d. Minimum Compression Recovery: At least 90 percent, when tested in conformance with conformance with ASTM D 5249.

e. Minimum Compression Deflection: At least 20.5 percent, when tested in conformance with conformance with ASTM D 5249.

f. Minimum Tensile Strength: At least 200 kPa, when tested in conformance with conformance with ASTM D 1623.

B. Open Cell Foam Joint Backing:

1. Restrictions: Permitted only for interior use, and as the second (interior) line of a double-line sealant application.

C. Bi-Cellular (Dual-Cell) Foam Joint Backings:

1. Description: Extruded polyethylene foam cylindrical sealant backings conforming to ASTM C 1330, Type B.

2. Restrictions: Permitted only for interior use. Only bi-cellular (dual-cell) foam may be used as a backing for single-component (air-cure) materials.

3. Products: Provide “Sof Rod” or “Dual Rod” manufactured by Nomaco, Inc., **or equal.**

4. Performance Requirements:

a. Maximum Water Absorption: Not more than 0.10 grams per cubic centiliter when tested in conformance with conformance with ASTM C 1016, Procedure B.

b. Density: At least 24 kilograms per cubic meter when tested in conformance with conformance with ASTM D 1622.

c. Maximum Outgassing: Less than 1 bubble when tested in conformance with conformance with ASTM D 1253.

d. Minimum Compression Recovery: At least 90 percent, when tested in conformance with conformance with ASTM D 5249.

e. Minimum Compression Deflection: At least 20.5 percent, when tested in conformance with conformance with ASTM D 5249.

f. Minimum Tensile Strength: At least 200 kPa, when tested in conformance with conformance with ASTM D 1623.

D. Bond-Breaker Tape: Polyethylene tape or other plastic tape recommended by sealant manufacturer for preventing sealant from adhering to rigid, inflexible joint-filler materials or joint surfaces at back of joint. Provide self-adhesive tape where applicable.

E. Prefabricated Backer Seal: Provide “BackerSeal” manufactured by Emseal Joint Systems, Ltd., or equal.

2.5 TAPE SEALANTS

A. Foam Tape:

1. Description: Closed-cell, compressible PVC foam with pressure-sensitive adhesive.

2. Product: Provide “NORSEAL” foam tape manufactured by Saint-Gobain Performance Plastics, or equal.

B. Pre-Formed Silicone Sheet:
   1. Applications: Used at barrier transitions to rough openings.
   2. Product: Provide “Dow Corning 123 Silicone Seal” manufactured by Dow Corning Corp., or equal.
   3. Colors: As selected by the Architect.

2.6 ACCESSORIES

A. Primer and Surface Cleaners:
   1. Application: Applied to enhance and strengthen sealant adhesion to porous and nonporous substrates; and help ensure proper joint preparation
   2. Products: Supplied, required, recommended, or accepted by the manufacturer for actual in-service conditions applicable to the project.

B. Masking Tape: Provide paper masking tape manufactured by 3M, or equal, unless another kind is supplied, required, recommended, or accepted by the manufacturer for actual in-service conditions applicable to the project

C. Other Accessories: Provide other accessories and secondary items normally furnished or necessary for a complete installation; or supplied, required, recommended, or accepted by the manufacturer for actual in-service conditions applicable to the project.

2.7 MIXING

A. Open sealants containers only as required for use and mix only in designated areas.

B. Do not reduce, alter, or introduce foreign materials into sealants, except in conformance with manufacturer’s instructions and other requirements and recommendations.

PART 3 - EXECUTION

3.1 EXAMINATION

A. Oversight: Ensure an adequate number of supervisors are present and proper supervision practices are followed at the project site before the installer begins work and at all times during installation.

B. Verification:
   1. Verify in-place construction, project conditions, and the work of other specification sections conform to the manufacturer’s instructions and other requirements and recommendations.
   2. Verify joint dimensions and joint backer sizes conform to width-to-depth ratios, neck dimensions, and surface bond areas required, recommended, or accepted by the manufacturer.
   3. Verify substrates are dry and free of deleterious and other substances that might interfere with joint sealant adhesion, appearance, or performance.

C. Evaluation and Assessment:
   1. Identify project conditions that do not conform to the manufacturer’s instructions and other requirements and recommendations.

2. Perform or arrange and pay costs for all remedial work necessary to correct or improve deficient conditions, without limitation, before the installer begins work.

3.2 PREPARATION

A. Protection:
   1. Work Area Protection: Protect work areas from dust and other airborne contaminants during surface preparation and joint sealant installation.
   2. Adjacent Material Protection: Protect adjacent surfaces against soiling and damage. Utilize drop cloths, shields, masking, barricades, and other items necessary to protect adjacent surfaces.

B. Substrate Preparation:
   1. Prepare substrates in conformance with ASTM C 1193 and as required, recommended, or accepted by the manufacturer without limitation; and in a manner that does not result in any warranty or guarantee becoming void.
   2. Remove loose materials and foreign matter that may impair sealant adhesion.
   3. Clean and prime substrates as required, recommended, or accepted by the manufacturer, using the manufacturer's recommended products and methods.
      a. Confine primers to bond areas.
      b. Do not allow spillage and migration onto exposed surfaces

3.3 INSTALLATION

A. General Requirements:
   1. Install joint sealants in conformance with ASTM C 1193 using materials and methods required, recommended, or accepted by the manufacturer, along with manufacturer-recommended accessories and techniques.
   2. Only install joint sealants under conditions that ensure finishes are free from blemishes and defects.
   3. Provide smooth surfaces of uniform finish, color, appearance, and coverage. Joint sealant surfaces with cloudiness, spotting, holidays, runs, or other imperfections are prohibited and are rejected as non-conforming work. Produce sharp and even lines and color breaks.
   4. Completed work must match approved samples and mockups, as accepted by the Architect.
   5. Installed joint sealants must be warrantable. Do not install, correct, or replace joint sealants in a manner that results in any warranty or guarantee becoming void.

B. Special Techniques:
   1. Install sealant backings to support sealants during application and at position required to produce cross-sectional shapes and depths of installed sealants relative to joint widths that allow optimum sealant movement capability.
      a. Install sealants free of air pockets, foreign embedded matter, ridges, and sags.
      b. Do not leave gaps between ends of sealant backings.
      c. Do not stretch, twist, puncture, or tear sealant backings.
      d. Remove absorbent sealant backings that have become wet before sealant application and replace them with dry materials.
   2. Install bond-breaker tape behind sealants where sealant backings are not used

between sealants and backs of joints.

3. Size materials to achieve required width/depth ratio.

4. Install sealants using proven techniques that comply with the following and at the same time backings are installed:
   a. Place sealants so they directly contact and fully wet joint substrates.
   b. Completely fill recesses in each joint configuration.
   c. Produce uniform, cross-sectional shapes and depths relative to joint widths that allow optimum sealant movement capability.
   d. Employ installation techniques that ensure joint sealers are deposited in uniform, continuous ribbons without gaps or air pockets, with complete "wetting" of bond surfaces equally on opposite sides.
   e. Joint configuration: Fill sealant joint to a slightly concave surface, slightly below adjoining surfaces, unless otherwise indicated.
   f. Where horizontal joints are between a horizontal surface and vertical surface, fill joint to form a slight cove, so that joint will not trap moisture or dirt.
5. Promptly after sealant application, and before skinning or curing begins, tool sealants to form smooth, uniform beads of configuration indicated; to eliminate air pockets; and to ensure contact and adhesion of sealant with sides of joint.
   a. Remove excess sealant from surfaces adjacent to joints.
   b. Use tooling agents that are approved in writing by sealant manufacturer and that do not discolor sealants or adjacent surfaces.
   c. Provide concave joint configuration per Figure 5A in ASTM C 1193, unless otherwise indicated.
   d. Provide flush joint configuration where indicated per Figure 5B in ASTM C 1193.
   e. Provide recessed joint configuration of recess depth and at locations indicated per Figure 5C in ASTM C 1193.
6. Preformed Silicone-Sealant System:
   a. Apply masking tape to each side of joint, outside of area to be covered by sealant system.
   b. Apply silicone sealant to each side of joint to produce a bead of size complying with preformed silicone-sealant system manufacturer's written instructions and covering a bonding area of not less than 3/8 inch. Hold edge of sealant bead 1/4 inch inside masking tape.
   c. Within 10 minutes of sealant application, press silicone extrusion into sealant to wet extrusion and substrate. Use a roller to apply consistent pressure and ensure uniform contact between sealant and both extrusion and substrate.
   d. Complete installation of sealant system in horizontal joints before installing in vertical joints. Lap vertical joints over horizontal joints. At ends of joints, cut silicone extrusion with a razor knife.
7. Preformed Foam Sealant Special Techniques:
   a. Install each length of sealant immediately after removing protective wrapping. Do not pull or stretch material.
   b. Produce seal continuity at ends, turns, and intersections of joints.
   c. For applications at low ambient temperatures, apply heat to sealant in conformance with sealant manufacturer's written instructions.

3.4 FIELD QUALITY CONTROL

A. Site Tests and Inspections:

1. General: Include site inspections as part of the work of this specification section. The Owner's testing and inspection agency performs inspections.
   a. Schedule and arrange all inspections.
   b. Coordinate all work and the final construction schedule with all inspections.
   c. Coordinate inspections with the work of other specification sections, and other specified, required, or necessary tests and inspections.
   d. Furnish all work, equipment, tools, facilities, personnel, and controls necessary for each test and inspection.
   e. Arrange inspections by notifying the Owner, the testing and inspection agency, the installer, the manufacturer's representative, and the Architect at least 5 business days before work is ready for testing or inspection.
   f. Witness all site inspections.
   g. Receive test and inspection reports and distribute to the installer and the manufacturer's representative.
2. Non-Destructive Testing:
   a. The center of sealant beads are depressed with a probing tool to depth of 50 percent of the bead width.
   b. If sealant fails, then the failure is recorded along with whether the failure was an adhesive or cohesive failure, and the maximum surface depression as a percentage of joint width.
   c. Tests are performed every 12 inches for first 10 linear feet of each joint; if test failure is not observed, then tests are performed every 24 inches thereafter.
3. Destructive Testing:
   a. A 6-inch-long tail of sealant is cut loose from substrate.
   b. The tail is marked one inch from the beginning of the adhesive bond away from the cut tail.
   c. The tail is grasped one inch from the beginning of the adhesive bond and pulled until it extends to 2 times the published movement capability of the sealant. If sealant does not fail, it is then pulled to failure.
   d. Elongation at the point of failure is recorded along with whether the failure was an adhesive or cohesive failure.
   e. Sealant is then observed during the complete filling of the joint for the presence of voids, for joint configuration, and for conformance with specified requirements. Observations and sealant dimensions are recorded.
   f. 10 tests are performed for the first 1,000 linear feet of joint for each type of sealant and substrate; if failure at two times the movement capability is not observed, then one test is performed for either every 1,000 linear feet thereafter or at a rate of one test per floor per building elevation, whichever is more frequent.
4. After testing is complete, promptly replace failed sealants in test areas.
   a. Neatly cut out and remove failed sealant, prepare and prime surfaces, and install new sealant.
      b. Ensure that original sealant surfaces are clean and that new sealant contacts original sealant.

3.5 CORRECTION AND REPAIR

A. Non-conforming, damaged, and defective work must be brought into conformance with the Contract Documents. Correct and repair as necessary, without limitation, including arranging all correction and repair work and paying all correction and repair costs, until accepted in writing by the Architect.

B. Corrective and repair work must be performed in conformance with a correction and repair plan submitted to and accepted in writing by the Architect before correction or repair work begins. At a minimum, correction and repair plans must include

1. written descriptions of non-conforming, damaged, and defective work;
2. supporting sketches, diagrams, photographs, and other visual depictions of non-conforming, damaged, and defective work; and
3. similar written descriptions and visual depictions of Contractor-proposed corrections and repairs.

C. Arrange and pay costs for removing and replacing work that cannot be corrected or repaired to the Architect's acceptance.

3.6 CLEANING

A. Cleaning Work: Clean sealant from adjacent surfaces.

1. Use cleaning materials, equipment, and accessories supplied, and means, methods, techniques, and procedures required, recommended, or accepted by the manufacturer.
2. Do not use cleaning materials or procedures known to change, or that might change, the appearance of exposed finishes or adjacent surfaces; or cause deterioration or damage to exposed finishes or adjacent surfaces.
3. Protect adjacent surfaces not being cleaned from staining, deterioration, damage, or other detrimental effects caused by cleaning.
4. Arrange and pay costs for removing and replacing work that cannot be cleaned to the Architect's acceptance.

B. Waste Management: After completing the work of this specification section, leave work areas free from debris, waste, scrap, equipment, tools, and other items.

END OF SECTION

SECTION 08 11 13
HOLLOW METAL DOORS, WINDOWS, AND FRAMES

PART 1 - GENERAL

1.01 SUMMARY

A. Section Includes:

1. Steel doors.
2. Steel door frames.
3. Fire-rated door and frame assemblies.
4. Steel window frames.

1.02 DEFINITIONS

A. Steel Sheet Thicknesses: Thickness dimensions, including those referenced in ANSI A250.8, are minimums as defined in referenced ASTM standards for both uncoated steel sheet and the uncoated base metal of metallic-coated steel sheets.

B. Hollow Metal Work: Hollow metal work fabricated according to ANSI/NAAMMHMMA 861.

1.03 SUBMITTALS

A. Submit as specified in Section 01 33 01 - Submittals.

B. Product Data: For each type of door and frame indicated, include door designation, type, level and model, material description, core description, construction details, label compliance, sound and fire-resistance ratings, and finishes. Frame corner samples showing weld method will be required.

C. Shop Drawings: Show the following:

1. Elevations of each door design showing dimensions, locations of door hardware, and preparations for power, signal, and electrified control systems.
2. Details of doors including vertical and horizontal edge details.
3. Frame details for each frame type including dimensioned profiles.
4. Details and locations of reinforcement and preparations for hardware.
5. Details of each different wall opening condition.
6. Details of anchorages, accessories, joints, and connections.
7. Coordination of glazing frames and stops with glass and glazing requirements.

D. Door Schedule: Use same reference designations indicated on Drawings in preparing schedule for doors and frames.

1.04 QUALITY ASSURANCE

A. Steel Door and Frame Standard: Comply with ANSI A 250.8, unless more stringent requirements are indicated. Additional standards include:

1. National Association of Architectural Metal Manufacturers (NAAMM), Hollow Metal Manufacturers Association Division (HMMA):
   a. "Hollow Metal Manual."
   b. "HMMA 861 Guide Specifications for Commercial Hollow Metal Doors and Frames."

B. Source Limitations: Obtain hollow metal doors and frames through one source from a single manufacturer.

C. Fire-Rated Door Assemblies: Assemblies complying with NFPA 80 that are listed and labeled by a testing and inspecting agency acceptable to authorities having jurisdiction, for fire-protection ratings indicated, based on testing according to NFPA 252.

1.05 DELIVERY, STORAGE, AND HANDLING

A. Deliver doors and frames cardboard-wrapped or crated to provide protection during transit and job storage. Provide additional protection to prevent damage to finish of factory-finished doors and frames.

B. Inspect doors and frames on delivery for damage, and notify shipper and supplier if damage is found. Minor damages may be repaired provided refinished items match new work and are acceptable to Agency's Representative. Remove and replace damaged items that cannot be repaired as directed.

C. Store doors and frames at building site under cover. Place units on minimum 4-inch- high wood blocking. Avoid using non-vented plastic or canvas shelters that could create a humidity chamber. If door packaging becomes wet, remove cartons immediately. Provide minimum 1/4-inch spaces between stacked doors to permit air circulation.

1.06 PROJECT CONDITIONS

A. Field Measurements: Verify openings by field measurements before fabrication and indicate measurements on Shop Drawings.

1. Established Dimensions: Where field measurements cannot be made without delaying the Work, establish opening dimensions and proceed with fabricating custom steel frames without field measurements. Coordinate wall construction to ensure that actual opening dimensions correspond to established dimensions.

1.07 COORDINATION

A. Coordinate installation of anchorages hollow metal frames. Furnish setting drawings, templates, and directions for installing anchorages, including sleeves, concrete inserts, anchor bolts, and items with integral anchors, that are to be embedded in concrete or masonry. Deliver such items to Project site in time for installation.

1.08 REGULATORY REQUIREMENTS

A. Conform to the applicable portions of the 2019 California Building Code.

PART 2 - PRODUCTS

2.01 MATERIALS

A. Cold-Rolled Steel Sheet: ASTM A 1008/A 1008M, Commercial Steel (CS), Type B; suitable for exposed applications.

B. Hot-Rolled Steel Sheet: ASTM A 1011/A 1011M, Commercial Steel (CS), Type B; free of scale, pitting, or surface defects; pickled and oiled.

C. Metallic-Coated Steel Sheet: ASTM A 653/A 653M, Commercial Steel (CS), Type B; with minimum G90 zinc-iron-alloy (galvannealed) coating designation.

D. Supports and Anchors: After fabricating, galvanize units to be built into exterior walls according to ASTM A 153/A 153M, Class B.

E. Inserts, Bolts, and Fasteners: Provide items to be built into exterior walls, hot-dip galvanized according to ASTM A 153/A 153M.

F. Powder-Actuated Fasteners in Concrete: Fastener system of type suitable for application indicated, fabricated from corrosion-resistant materials, with clips or other accessory devices for attaching custom steel door frames of type indicated.

G. Bituminous Coating: Cold-applied asphalt mastic, SSPC-Paint 12, compounded for 15mil dry film thickness per coat. Provide inert-type noncorrosive compound free of asbestos fibers, sulfur components, and other deleterious impurities.

H. Approved manufacturers: Products of the following manufacturers, provided they comply with requirements of the contract documents, will be among those considered acceptable:

I.

1. Steelcraft - Division of Ingersoll Rand
2. Curries - Division of ASSA Abloy
3. Ceco - Division of ASSA Abloy
4. Or equal

2.02 DOORS

A. General: Provide doors of sizes, thicknesses, and designs indicated. Provide doors of design indicated, not less than 1-3/4-inches thick, of seamless hollow construction, unless otherwise indicated. Construct doors with smooth surfaces without visible joints or seams on exposed faces. Comply with ANSI/NAAMM-HMMA 861.

B. Interior Doors: Typically minimum 0.059 inch thick steel sheet. Provide doors complying with requirements indicated below by referencing ANSI 250.8 for level and model and ANSI A250.4 for physical-endurance level:

1. Typical: Level 3 and Physical Performance Level A (Extra Heavy Duty), Model 2 (Seamless).
2. Full-Width Glass: Level 3 and Physical Performance Level A (Extra Heavy Duty), Model 3 (Stile and Rail).

C. Vision Lite Systems: Manufacturer's standard kits consisting of glass lite moldings to accommodate glass thickness and size of vision lite indicated.

2.03 FRAMES

A. General: Provide steel frames for doors, transoms, sidelights, borrowed lights, and other openings that comply with ANSI A250.8 and with details indicated for type and profile. Conceal fastenings, unless otherwise indicated.

B. Interior Frames: Fabricate from cold-rolled steel sheet or G90 galvanize coated at designated locations:

1. Typical: Minimum 0.059-inch thick sheet.
2. Openings 48 inches or more in width: 0.074 inch thick sheet or 0.059 inch thick sheet with 0.146-inch thick reinforcing channel in head of frame.

C. Door Silencers: Except on weather-stripped and fire rated frames, fabricate stops to receive three silencers on strike jambs of single-door frames and two silencers on heads of double-door frames.

D. Supports and Anchors: Fabricated from not less than 0.042-inch- thick, electrolytic zinc-coated or metallic-coated steel sheet.

E. Inserts, Bolts, and Fasteners: Manufacturer's standard units. Where zinc-coated items are to be built into exterior walls, comply with ASTM A 153/A 153M, Class C or D as applicable.

2.04 FABRICATION

A. General: Fabricate steel door and frame units to comply with ANSI A250.8 and to be rigid, neat in appearance, and free from defects including warp and buckle. Where practical, fit and assemble units in manufacturer's plant. Clearly identify work that cannot be permanently factory assembled before shipment, to assure proper assembly at Project site.

B. Interior Door Faces: Fabricate exposed faces of doors and panels, including stiles and rails of nonflush units, from the following material:

1. Cold-rolled steel sheet.
2. Metallic-coated steel sheet where indicated.

C. Core Construction: Manufacturer's standard steel ribbed or resin impregnated honeycomb core construction that produces a door complying with SDI standards. Honeycomb products shall be laminated to both face sheets of door.

D. Clearances for Non-Fire-Rated Doors: Not more than 1/8 inch at jambs and heads, except not more than 1/4 inch between pairs of doors. Not more than 3/4 inch at bottom.

E. Clearances for Fire-Rated Doors: As required by NFPA 80.

F. Single-Acting, Door-Edge Profile: Beveled edge.

G. Tolerances: Comply with SDI 117, "Manufacturing Tolerances for Standard Steel Doors and Frames."

H. Fabricate concealed stiffeners, reinforcement, edge channels, louvers, and moldings from either cold- or hot-rolled steel sheet.

I. Exposed Fasteners: Unless otherwise indicated, provide countersunk flat or oval heads for exposed screws and bolts.

J. Hardware Preparation: Prepare doors and frames to receive mortised and concealed hardware according to final door hardware schedule and templates provided by hardware supplier. Comply with applicable requirements in ANSI A250.6 and ANSI A115 Series specifications for door and frame preparation for hardware.

1. For concealed overhead door closers, provide space, cutouts, reinforcement, and provisions for fastening in top rail of doors or head of frames, as applicable.
2. Fabricate frames with mitered or coped and continuously welded corners and seamless face joints.
3. Provide welded frames with temporary spreader bars.

K. Reinforce doors and frames to receive surface-applied hardware. Drilling and tapping for surface-applied hardware may be done at Project site.

L. Locate hardware as indicated on Shop Drawings or, if not indicated, according to ANSI A250.8.

M. Glazing Stops: Manufacturer's standard, formed from 0.032-inch- thick steel sheet.

1. Provide non-removable stops on outside of exterior doors and on secure side of interior doors for glass, louvers, and other panels in doors.
2. Provide screw-applied or snap-in, removable, glazing stops on inside of glass, louvers, and other panels in doors.

N. Astragals: As required by NFPA 80 to provide fire ratings indicated.

O. Frame Construction: Fabricate frames to shape shown.

2.05 FINISHES

A. Prime Finish: Manufacturer's standard, factory-applied coat of rust-inhibiting primer complying with ANSI A250.10 for acceptance criteria.

PART 3 - EXECUTION

3.01 EXAMINATION

A. Examine framing for compliance with requirements for installation tolerances, minimum required face or edge clearances, effective sealing between joints of framing members, and other conditions affecting performance of the Work.

B. Proceed with installation only after unsatisfactory conditions have been corrected.

3.02 INSTALLATION

A. General: Install steel doors, frames, and accessories according to Shop Drawings, manufacturer's data, and as specified.

B. Placing Frames: Comply with provisions in SDI 105, unless otherwise indicated. Set frames accurately in position, plumbed, aligned, and braced securely until permanent anchors are set. After wall construction is completed, remove temporary braces and spreaders, leaving surfaces smooth and undamaged.

1. Except for frames located in existing walls or partitions, place frames before construction of enclosing walls and ceilings.
2. In metal-stud partitions, provide at least three wall anchors per jamb; install adjacent to hinge location on hinge jamb and at corresponding heights on strike jamb. Attach wall anchors to studs with screws.
3. Install fire-rated frames according to NFPA 80.
4. For openings 90 inches or more in height, install an additional anchor at hinge and strike jambs.

C. Door Installation: Comply with ANSI A250.8. Fit hollow-metal doors accurately in frames, within clearances specified in ANSI A250.8. Shim as necessary to comply with SDI 122 and ANSI/DHI A115.1G.

1. Fire-Rated Doors: Install within clearances specified in NFPA 80.
2. Smoke-Control Doors: Install to comply with NFPA 105.

3.03 ADJUSTING, PROTECTION, AND CLEANING

A. Prime-Coat Touchup: Immediately after installation, sand smooth any rusted or damaged areas of prime coat and apply touch up of compatible air-drying primer.

B. Protection Removal: Immediately before final inspection, remove protective wrappings from doors and frames.

END OF SECTION

SECTION 08 31 16

ACCESS PANELS

PART 1 - GENERAL

1.1 SUMMARY

A. Section Includes:
   1. Metal access panels and frames.
   2. GFRG access panels and frames.
   3. Supplementary components and accessories normally furnished or necessary for a complete installation, whether or not such items are indicated on the Drawings or included in the Specifications.

1.2 REFERENCES

A. Abbreviations and Acronyms:
   1. BMT: Base Metal Thickness.

B. Definitions:
   1. Manufacturer: Means the access panel manufacturer, unless otherwise indicated.

1.3 ADMINISTRATIVE REQUIREMENTS

A. Coordination:
   1. Coordinate locations of items and equipment being accessed with access panel sizes and locations indicated on the Drawings.
   2. Coordinate hardware preparations, handing, reinforcement requirements, and locations with the Drawings, access panel manufacturer, and selected hardware sets.

1.4 SUBMITTALS

A. Action Submittals: Submit the following for responsive action (formal review and approval).
   1. Product Data: Submit manufacturer's product data, specifications, typical installation details, and all other information necessary to show conformance to the Contract Documents, excluding material safety data sheets (MSDSs), which are returned to the Contractor without review or responsive action.
   2. Shop Drawings:
      a. Submit dimensioned plans and elevations drawn to scale and showing access panel locations, sizes, and extents of all items, accessories, and trim. Label manufactured items by product name.
      b. Include project-specific dimensioned details drawn to scale showing conditions not detailed on the product data; or that are detailed, but not in a manner specific to the project. Cross-reference details to plans and elevations.

B. Informational Submittals: Submit manufacturer's instructions for information (informal review: responsive action not expected or required, except to record non-conformance

with submittal requirements).

1. Submit manufacturer-prepared published instructions for proper installation of furnished access panels.
2. If manufacturer's instructions are unavailable or do not apply to specific project conditions, then consult the manufacturer's representative and obtain project-specific supplemental instructions printed on manufacturer's letterhead.
3. Promptly distribute supplemental instructions to the Architect, who may have comments that lead to contract modifications or minor changes in the work.

1.5 QUALITY ASSURANCE

A. Source Limitations:
   1. Access panels must be obtained through one source from the same manufacturer (to ensure compatibility, regulatory conformance, and a warrantable installation).
      a. Certain items may be obtained from more than one manufacturer, but only when used for separate installations.
      b. Items provided for each different installation must be obtained from the same source and manufacturer.
   2. Provide secondary materials, components, accessories and other items from sources required, recommended, or accepted by the primary manufacturer for actual in- service conditions applicable to the project.

1.6 HANDLING

A. Receiving: Inspect all deliveries for deteriorated, damaged, and defective items.
   1. Reject items that are not packaged in a manner that prevents damage; or that exhibit deterioration or damage or have damaged or open packaging or containers.
   2. Reject items that are not transported, delivered, or protected in conformance with manufacturer-recommended transport, delivery, and receiving requirements.
   3. Unload and store only inspected and accepted items.

B. Storage: Store unloaded items indoors as shipped, upright in their original packaging or containers, within dry, well-ventilated, broom-cleaned and enclosed storage areas.

C. Handling: Handle items in conformance with manufacturer's instructions and other requirements and recommendations, and in a manner that that prevents damage. Avoid damage to packaging and containers, and contamination of contents.

D. Damaged Item Replacement: Promptly remove and replace deteriorated, damaged, or defective access panels with undamaged new access panels that do not exhibit deterioration, damage, or defects.

E. Packaging Waste Management: Do not burn or bury construction waste at the project site. Remove and legally dispose of all construction waste away from the project site.

PART 2 - PRODUCTS

2.1 METAL ACCESS PANEL AND FRAMES

A. Manufacturer: Provide products manufactured by one of the following, or equal.
   1. Activar Construction Products Group, Inc.

2. Acudor Products, Inc.
3. Karp Associates, Inc.
4. Nystrom Building Products.

B. Non-Rated Access Panels:
1. Product: Provide “JL Industries Model TMW” manufactured by Activar Construction Products Group, Inc., or equal.
2. Material: At least 0.0598-inch BMT (MSG 16) cold-rolled uncoated steel sheet frame and 0.0598-inch BMT (MSG 16) cold-rolled uncoated steel sheet door.
3. Trim: At least 0.0299-inch BMT (MSG 22) HDG steel sheet gypsum board tape-in bead flange.
4. Hinge: Concealed continuous piano hinge.
5. Finish: Manufacturer’s standard shop-applied phosphate pre-treatment and baked on rust inhibitive primer for field-applied finish.

C. Fire-Resistance Rated Access Panels:
1. Product: Provide “JL Industries Model FDW” manufactured by Activar Construction Products Group, Inc., or equal.
2. Material: At least 0.0598-inch BMT (MSG 16) cold-rolled uncoated steel sheet frame with At least 0.0359-inch BMT (MSG 20) cold-rolled uncoated steel sheet door.
3. Trim: At least 0.0299-inch BMT (MSG 22) HDG steel sheet gypsum board tape-in bead flange.
4. Insulation: At least 2-inch thick fire-resistive mineral wool insulation sandwiched between door faces.
5. Hinge: Concealed continuous piano hinge.
6. Finish: Manufacturer’s standard shop-applied phosphate pre-treatment and baked on rust inhibitive primer for field-applied finish.

D. Requisite Properties:
1. Provide at least 24-inch square or larger panel assemblies where servicemen must access spaces through panels.

2. Elsewhere, provide at least 12-inch square panel assemblies.

E. Accessories:
1. Locking Devices:
   a. Public Areas: Provide one mortise cylinder lock per access door. Key all locks alike, unless otherwise noted.
   b. Other Areas: Provide flush, key-operated cam lock. Key all locks alike, unless otherwise noted.
   c. Panels 24 inches or More in Any Dimension: Provide interior latch to permit door opening from inside without a key.
2. Gaskets: Apply manufacturer’s optional gasketing to frame doorstops of units that do not come standard with gaskets.
3. Fastenings: Provide backings, inserts, loose connection hardware, fasteners, anchors, attachments, connectors, and other items supplied, required, recommended, or accepted by the manufacturer for actual in-service conditions applicable to the project.
4. Other Accessories: Provide other accessories and secondary items normally

furnished or necessary for a complete installation; or supplied, required, recommended, or accepted by the manufacturer for actual in-service conditions applicable to the project.

PART 3 - EXECUTION

3.1 EXAMINATION

A. Oversight: Ensure an adequate number of supervisors are present and proper supervision practices are followed at the project site before the installer begins work and at all times during installation.

B. Verification: Verify in-place supporting and adjacent construction conforms to the manufacturer's requirements or recommendations and satisfies all other conditions that might affect the quality of installation or the durability, appearance, or performance of installed and adjacent items.

C. Evaluation and Assessment:

1. Identify project conditions that do not conform to the manufacturer's instructions and other requirements and recommendations.
2. Perform or arrange and pay costs for all remedial work necessary to correct or improve deficient conditions, without limitation, before the installer begins work.

3.2 INSTALLATION

A. General Requirements:

1. Install access panels using materials and methods required, recommended, or accepted by the manufacturer, along with manufacturer-recommended accessories and techniques.
2. Set items true to line, to required levels and lines, and plumb, level, and square, without warp or rack, with flush well-fitted joints, and in alignment with adjacent construction
3. Installed access panels must be warrantable. Do not install, correct, or replace access panels in a manner that results in any warranty or guarantee becoming void.

B. Interface with Adjacent Items: Provide materials, components, and accessories normally furnished or necessary to securely attach access panels to supporting construction.

C. Installation Tolerances: Install access panels to an allowable tolerance variation of not more than 1/4-inch from true position and not more than 1/8-inch from plumb, level, and alignment.

3.3 ADJUSTING

A. Verify smooth and quiet access panel door and hardware operation.

B. Lubricate and adjust operating parts and hardware to function properly, free from warp, twist, binding, and distortion. Confirm latches and locks engage securely without forcing or binding.

C. Replace items that do not operate freely in a safe and reliable manner.

3.4 CORRECTION AND REPAIR

A. Non-conforming, damaged, and defective work must be brought into conformance with the Contract Documents. Correct and repair as necessary, without limitation, including arranging all correction and repair work and paying all correction and repair costs, until accepted in writing by the Architect.

B. Corrective and repair work must be performed in conformance with a correction and repair plan submitted to and accepted in writing by the Architect before correction or repair work begins. At a minimum, correction and repair plans must include

1. written descriptions of non-conforming, damaged, and defective work;
2. supporting sketches, diagrams, photographs, and other visual depictions of non-conforming, damaged, and defective work; and
3. similar written descriptions and visual depictions of Contractor-proposed corrections and repairs.

C. Arrange and pay costs for removing and replacing work that cannot be corrected or repaired to the Architect's acceptance.

3.5 CLEANING

A. Cleaning Work: Clean all visible access panel surfaces in a manner that does not result in any warranty or guarantee becoming void.

1. Use cleaning materials, equipment, and accessories supplied, and means, methods, techniques, and procedures required, recommended, or accepted by the manufacturer.
2. Do not use cleaning materials or procedures known to change, or that might change, the appearance of exposed finishes or adjacent surfaces; or cause deterioration or damage to exposed finishes or adjacent surfaces.
3. Protect adjacent surfaces not being cleaned from staining, deterioration, damage, or other detrimental effects caused by cleaning.
4. Arrange and pay costs for removing and replacing work that cannot be cleaned to the Architect's acceptance.

B. Waste Management: After completing the work of this specification section, leave work areas free from debris, waste, scrap, equipment, tools, and other items.

3.6 PROTECTION

A. Protect installed access panels in place from soiling, deterioration, and damage until Substantial Completion.

B. Do not store anything on or adjacent to or against installed access panels unless they are protected from damage, as accepted in writing by the manufacturer's representative. Do not use installed access panels as work surfaces.

C. Remove protection when it's no longer needed and before Substantial Completion.

END OF SECTION

SECTION 08 41 13

ALUMINUM-FRAMED ENTRANCES AND STOREFRONTS

PART 1 - GENERAL

1.1 SUMMARY

A. Section Includes:
1. Aluminum-framed standard-manufactured storefront assemblies.
2. Aluminum-framed glass entrance doors.
3. Site tests and inspections.
4. Supplementary components and accessories normally furnished or necessary for a complete installation, whether or not such items are indicated on the Drawings or included in the Specifications.

B. Related Requirements:
1. Section 08 71 00 for door hardware.
2. Section 08 80 00 for glass glazing.

1.2 REFERENCES

A. Abbreviations and Acronyms:
1. AAMA: American Architectural Manufacturers Association.
2. WDMA: Window & Door Manufacturers Association.
3. CSA: Canadian Standards Association.

B. Definitions:
1. Manufacturer: Means the entrance door or storefront manufacturer, as the context admits, unless otherwise indicated.
2. Failure: Includes noise or vibration caused by movement, material deterioration beyond normal weathering, water leakage through fixed glazing and framing areas, and failure of operating components.
3. Water Leakage: Means no uncontrolled water penetrating assemblies or water appearing on assemblies' normally-exposed interior surfaces from sources other than condensation. Water leakage does not include water controlled by flashing and gutters that is drained to the exterior.

1.3 ADMINISTRATIVE REQUIREMENTS

A. Coordination:
1. Coordinate building opening tolerances with entrance door manufacturing and erection tolerances.

2. Coordinate hardware preparations, handing, and reinforcement requirements and locations with the Drawings, door schedule, and selected hardware sets.
3. Coordinate entrance door hardware finishes with other door hardware finishes.
4. Coordinate building opening tolerances with storefront manufacturing and erection

tolerances. The manufacturer must accommodate building frame tolerances.

B. Delegated Design Requirements:

1. Engineer, fabricate, assemble, and install entrance doors and storefronts that conform to the profiles indicated and other Contract Document requirements; meet specified performance criteria; and result in structurally sound, non-corroding, and weathertight assemblies that accommodate, resist, distribute, or transfer in-service loads without incipient or catastrophic failure.
2. Maintain visual design concept indicated, including sizes, profiles, and alignments. Deviation from visual design concept is non-conforming work and prohibited without prior written acceptance by the Architect.

C. Performance Requirements:

1. General: Entrances and storefronts must establish and maintain a continuous watertight seal without failure.
2. Design Pressure: Calculate in conformance with American Society of Civil Engineers/ Structural Engineering Institute publication ASCE/SEI 7, "*Minimum Design Loads and Associated Criteria for Buildings and other Structures*".
3. Superstructure Deflection and Story Drift: Accommodate design displacement of adjacent stories indicated on the structural drawings.
4. Seismic Loads: Resist, distribute, or transfer seismic loads indicated on the structural drawings without incipient or catastrophic failure.
5. Perpendicular Deflection (Convexity and Concavity):
   a. Storefront Framing Spans up to 13 Feet 6 Inches: Framing members may not deflect more than L/175 or 3/4-inch, whichever is less, measured normal to the assembly plane.
   b. Storefront Framing Spans between 13 Feet 6 Inches and 40 Feet: Framing members may not deflect more than L/240 plus 1/4-inch, measured normal to the assembly plane.
   c. Deflection of the horizontal sill member due to the weight of the glass should not exceed 1/8" nor should the deflection decrease the head clearance of the panel below by more than 25%.
   d. Storefront Spans Greater than 40 Feet: Provide structural analysis.
   e. Cantilever Deflection: Not more than 2L/175, where "L" is the cantilever length, measured normal to the assembly plane.
   f. Center of Glass Deflection: Not more than L/50 of short side length, or one inch, whichever is less, measured normal to the assembly plane.
6. Parallel Deflection (Sagging): Limit deflection under maximum design load to either 1/8-inch or not more than 25-percent reduction in glass bite, whichever is smaller measured in line with the assembly plane.
   a. Minimum Clearance Between Framing Members and Top of Glazing or other Fixed Component Immediately Below: 1/8-inch.
   b. Minimum Clearance Between Framing Members and Operable Components, Including Doors and Entrances: 1/16-inch.
   c. Maximum Twisting of Doors and Entrances: Twisting (rotation) of horizontal framing members caused by glass weight may not exceed one degree, measured between the ends and the center of each span.
7. Permanent Deformation: No permanent deformation at design pressure. Limit permanent deformation to 0.2 percent of the clear span of any framing member, when tested in conformance with ASTM E 330 (uniform static pressure test).

a. Maximum Positive and Negative Test Loads: Equal to at least the specified design pressure.
b. Maximum Positive and Negative Proof Loads for Vertical Glazing: At least equal to 1.5 times the design pressure.
c. Maximum Positive and Negative Proof Loads for Sloped Glazed Assemblies: At least equal to 2.0 times the design pressure.
d. Duration of Maximum Test and Proof Loads: 10 seconds.
e. Measurement: The number and location of deflection measurements must be shown on the mockup shop drawings prior to testing. At a minimum, indicate measurement of deflection at maximum deflection and end deflection locations

8. Thermal Transmittance (U-Factor): Maximum assembly thermal transmittance value may not exceed the following.
   a. Maximum Winter Nighttime Transmittance (U-value): Not more than 0.36 for fixed assemblies; and 0.46 BTU per hour per square foot per deg. F. for operable assemblies.
   b. Maximum Summer Daytime Transmittance (U-value): Not more than 0.42 BTU per hour per square foot per deg. F.
9. Air Leakage (AL): Maximum permanent AL rating of not more than 0.006 cubic feet per minute per square foot, when tested in conformance with ASTM E 283 at 6.24 pounds per square foot minimum differential static air pressure.
10. Water Leakage: No water leakage through the assembly or joints, when tested in conformance with both ASTM E 331 (uniform static air pressure test) and AAMA 501 (dynamic pressure test) at 12 pounds per square foot minimum differential pressure.
11. Condensation Resistance Factor (CRF): Minimum CRF value of at least the following, when tested in conformance with NFRC 500.
    a. Combined Framing Members and Glazing: At least 56.
    b. Framing Members Only: At least 70.
12. Acoustical Performance:
    a. Sound Transmission Class (STC): Provide complete assemblies (both frame and glazing) having a minimum laboratory-tested STC value of at least STC 31, as determined in conformance with ASTM E 413, based on testing in conformance with ASTM E 90.
    b. Outdoor-Indoor Transmission Class (OITC): Provide complete assemblies (both frame and glazing) having a minimum laboratory-tested OITC value of at least

    OITC 26, as determined in conformance with ASTM E 413, based on testing in conformance with ASTM E 90.
13. Thermal Expansion and Contraction: Accommodate movement resulting from at least 120 deg. F ambient and 180 deg. F material surface temperature differentials (changes).
14. Dissimilar Metal Corrosion Protection: Permanently isolate metal surfaces from direct contact with incompatible materials and other potentially corrosive substrates as specified in Section 05 50 00.

D. Preinstallation Meeting:
1. Hold a meeting after submittal approval and at least 10 business days before beginning installation.
2. During the meeting, review the Contract Documents, submittals, project conditions, and installation sequence and methods, including special details and conditions that might affect installation

3. Identify and discuss adverse or unfavorable conditions detrimental to protecting stored materials or to installation; or to the quality, durability, appearance, or performance of installed entrances and storefronts. Resolve each condition.
4. Finalize construction schedule.
5. Record significant discussions and distribute meeting minutes. Do not begin installation until disagreements are successfully resolved to the satisfaction of all parties.

1.4 SUBMITTALS

A. Action Submittals: Submit the following for responsive action (formal review and approval).
   1. Product Data:
      a. Submit manufacturer's product data, specifications, typical installation details, and all other information necessary to show conformance to the Contract Documents, excluding material safety data sheets (MSDSs), which are returned to the Contractor without review or responsive action.
      b. Submit sample warranties with warranty periods, terms, conditions, exclusions, and remedies explicitly defined for each warranty, including clear warranty period start dates. (e.g., date of manufacture, purchase, installation, Beneficial Occupancy, Substantial Completion, Final Completion, etc.)
   2. Door Schedule: Submit schedule showing opening identification symbols and entrance door types and sizes, including thickness, swing, fire-resistance rating label requirements, and undercuts. Use the same reference numbers for openings and details as the Drawings.
   3. Shop Drawings:
      a. Submit dimensioned plans and elevations drawn to scale and showing entrance door and storefront layout, materials, construction, and finishes. Show locations, sizes, and extents of all items, accessories, and trim. Label manufactured items by product name.
         b. Include project-specific dimensioned details drawn to scale showing conditions not detailed on the product data; or that are detailed, but not in a manner specific to the project. Cross-reference entrance door details to door schedule. Cross- reference storefront details to plans and elevations.
      4. Samples:
         a. Submit at least 6-inch square representative samples of each entrance door and storefront framing color and finish.

B. Informational Submittals: Submit the following for information (informal review: responsive action not expected or required, except to record non-conformance with submittal requirements).
   1. Manufacturer's Instructions: Submit manufacturer-prepared published instructions for proper installation of furnished entrance doors and storefronts.
      a. If manufacturer's instructions are unavailable or do not apply to specific project conditions, then consult the manufacturer's representative and obtain project-specific supplemental instructions printed on manufacturer's letterhead.
      b. Promptly distribute supplemental instructions to the Architect, who may have comments that lead to contract modifications or minor changes in the work.
   2. Delegated Design Submittals: Together with shop drawings, submit engineering calculations demonstrating conformance to the Contract Documents and all impacts of

delegated design scope of work on other work.

a. Calculations must be explicit and legible and must incorporate distinct cross-references to submitted shop drawings in sufficient quantity to render the calculations readily intelligible and reviewable.

b. At a minimum, calculations must include design loads; section-property computations; analysis of fasteners, anchors, attachments, and connectors; and signature and seal of the licensed professional engineer responsible for preparing them.

c. Test reports are not an acceptable substitute for calculations and are returned to the Contractor without review or responsive action, except to record non-conformance with this requirement.

3. Qualification Statements: Submit written descriptions confirming experience specified in QUALITY ASSURANCE article below.

C. Closeout Submittals: Submit the following to the Architect as a condition of project closeout.

1. Maintenance Data: Submit copies of manufacturer's instructions and other requirements and recommendations for entrance door maintenance, cleaning, and repair.

2. Warranty Documentation: Submit final warranties signed by the manufacturer's representative with complete terms indicated for all warranties covering items furnished or installed under this specification section.

1.5 QUALITY ASSURANCE

A. Source Limitations:

1. Entrance doors and storefronts must be obtained through one source from the same manufacturer (to ensure compatibility, regulatory conformance, and a warrantable installation).

a. Certain items may be obtained from more than one manufacturer, but only when used for separate installations.

b. Items provided for each different installation must be obtained from the same source and manufacturer.

2. Provide secondary materials, components, accessories and other items from sources required, recommended, or accepted by the primary manufacturer for actual in- service conditions applicable to the project.

B. Regulatory Requirements:

1. Automatic and power-assisted doors must conform to the requirements of California Building Code Section 11B-404.3

C. Quality Standard Requirements:

1. Entrance Door Product Standard: Comply with the requirements of ANSI/AAMA/WDMA publication ANSI/AAMA/WDMA 101/I.S.2/NAFS-02, "*Windows, Skylights and Glass Doors*".

2. Entrance Door Performance Standard: Comply with the requirements of AAMA/WDMA/CSA publication AAMA/WDMA/CSA 101/I.S.2/A440, "*NAFS - North American Fenestration Standard/Specification for Windows, Doors, and Skylights*".

D. Qualifications:

1. Manufacturer: Company or individuals must have at least 10 years' experience manufacturing entrance doors and storefronts installed on at least 200 previous projects similar to this project in size, material, design, and complexity.
2. Installer: Company or individuals must have at least 5 years' experience installing entrance doors and storefronts for at least 30 previous projects similar to this project in size, material, design, and complexity.
3. Supervisors: Individuals must have at least 7 years' experience installing entrance doors and storefronts for at least 30 previous projects similar to this project in size, material, design, and complexity, including at least 2 years' supervisory experience directing and leading entrance and storefront installers.
4. Engineer: Must be a licensed professional structural engineer registered to practice in California having at least 10 years' experience performing the kind of engineering services indicated for at least 20 previous projects similar to this project in size, material, design, and complexity.

E. Mockups: If an *ex-situ* exterior wall integrated mockup is required for this project, then integrate entrance doors and storefronts into the mockup as part of the work of this specification section.

1.6 HANDLING

A. Receiving: Inspect all deliveries for deteriorated, damaged, and defective items.

1. Reject items that are not packaged in a manner that prevents damage; or that exhibit deterioration or damage or have damaged or open packaging or containers.
2. Unload and store only inspected and accepted items.

B. Storage: Store unloaded items as shipped and in conformance with manufacturer's instructions and other requirements and recommendations for storage. Furnish adequate dunnage and bracing during storage.

1. Prevent stored items from contacting the floor or ground, from soiling and staining, and from deterioration and damage.
2. If items are not stored in an enclosed location, then cover the tops and sides with securely-tied, waterproof, and breathable covers. Unvented polyethylene tarpaulins do not qualify as breathable covers and are prohibited. (due to potential accumulation of moisture beneath tarpaulin during certain environmental conditions)
3. Incline covered items to ensure maximum drainage of accumulated moisture.
4. Do not leave items uncovered where they might be exposed to weather or become wet; or exposed to other sources of deterioration and damage.

C. Handling: Handle items in conformance with manufacturer's instructions and other requirements and recommendations, and in a manner that that prevents damage.

D. Damaged Item Replacement: Promptly remove and replace deteriorated, damaged, or defective entrances or storefront materials with undamaged new items or materials that do not exhibit deterioration, damage, or defects.

E. Packaging Waste Management: Do not burn or bury construction waste at the project site. Remove and legally dispose of all construction waste away from the project site.

1.7 WARRANTY

A. Manufacturer Warranty: Furnish to the Owner a written manufacturer warranty for products, components, and accessories against all patent and latent defects, and incipient and catastrophic failure for 5 years; and for finishes against color fading, chalking, cracking, checking, peeling, and adhesive failure for 20 years.

B. Installer Guarantee: Furnish to the Owner a written guarantee for the work of this specification section against all defects in materials and workmanship for 2 years from date of acceptance. Guarantees must be properly prepared and signed on the guarantee form in Division 01.

PART 2 - PRODUCTS

2.1 MANUFACTURERS

A. Manufacturer: Provide products manufactured by one of the following, or equal.

1. Arcadia.
2. EFCO Corp.
3. Kawneer Co., Inc.
4. Wausau Window and Wall Systems.

2.2 ALUMINUM-FRAMED STOREFRONTS

A. Products: Provide one of the following, or equal.

1. “AFG451 Series” manufactured by Arcadia.
2. “Trifab VersaGlaze 451 Framing System” manufactured by Kawneer.
3. “4500 Series Storefront Framing” manufactured by Wausau Window and Wall Systems.

B. Requisite Properties:

1. Faming Size: 2 inches by 4-1/2 inches.
2. Glazing Thickness: One-inch.
3. Glazing Installation: Outside glazed.
4. Exposed Finishes: Specified in Section 05 05 14.
5. Concealed Steel Finishes: Prepare surfaces and apply shop primer specified in Section 05 05 13.
6. Concealed Aluminum Finishes: Prepare surfaces and coat aluminum surfaces in contact with masonry, concrete, or steel with bituminous paint specified Section 05 50 00.

2.3 ALUMINUM-FRAMED ENTRANCES

A. Products: Provide one of the following, or equal.

1. “MS362 Series” manufactured by Arcadia.
2. “350 Medium Stile Entrance” manufactured by Kawneer.
3. “Medium Stile Standard Entrances” manufactured by Wausau Window and Wall Systems.

B. Requisite Properties:

1. Entrance Door Thickness: 1-3/4 inches.
2. Vertical Stile Width: 3-1/2 inches.
3. Top Rail Width: 3-1/2 inches.
4. Bottom Rail Width: 10 inches.
5. Glazing Thickness: One-inch.
6. Glazing Stops: Square, snap-on, extruded-aluminum stops and preformed gaskets. Provide non-removable glazing stops on outside of door.
7. Exposed Finishes: Match storefront framing.
    8. Concealed Steel Finishes: Prepare surfaces and apply shop primer specified in Section 05 05 13.
    9. Concealed Aluminum Finishes: Prepare surfaces and coat aluminum surfaces in contact with masonry, concrete, or steel with bituminous paint specified Section 05 50 00.

2.4 MATERIALS

A. Aluminum:
    1. Standard Aluminum Structural Profiles: ASTM B 308, Alloy 6061-T6.
    2. Extruded Aluminum Bars and Shapes: ASTM B 221, Alloy6063-T5 or T6 for primary components; Alloy 6063-T5 or T6, 6005-T5, 6105-T5 or 6061-T6 for structural components.
    3. Aluminum Sheet and Plate: ASTM B 209, Alloy 5005-H32 or Alloy 3003-H14.
    4. Extruded Aluminum Tubes: ASTM B 221 or ASTM B 483.
    5. Structural Aluminum Pipe and Round Tube: ASTM B 429.

B. Glazing: Specified in Section 08 80 00.

2.5 ACCESSORIES

A. Steel Reinforcement: When required by engineering calculations, provide steel bent plate or shapes conforming to ASTM A 36 and shop primed in compliance with Section 05 05 13.

B. Brackets: Provide high-strength aluminum or austenitic stainless steel brackets and reinforcements.

C. Filler Members: Provide brake-shaped aluminum members, with finish to match framing, as required to fill gaps greater than 1/2” wide between framing members and adjacent surfaces.

D. Sill Flashing: Fabricate from at least 0.060-inch thick aluminum sheet, with welded end dams and finished to match frames.

E. Concealed Flashing: Stainless steel sheet conforming to ASTM A 240 (annealed) Type 04 (for all other applications), No. 2D (matte) finish, annealed, No. 4 (soft) temper (hardness not more than Rockwell B-65; can be bent flat upon itself in any direction).

F. Movement Joints: Slip-joint linings, slip pads, spacers, and sleeves of material and type supplied, required, recommended, approved, or accepted by the by the manufacturer.

G. Glazing Gaskets: Manufacturer's standard ethylene propylene diene monomer (EPDM) conforming to ASTM C 864 and having a Shore A hardness value of at least 70, unless another type of gasket is supplied, required, recommended, or accepted by the manufacturer.

H. Silicone Gutter Gaskets: Custom extrusions installed with low modulus single-component sealant specified in Section 07 92 00.

I. Fastenings: Provide backings, inserts, loose connection hardware, fasteners, anchors, attachments, connectors, and other items supplied, required, recommended, or accepted by the manufacturer for actual in-service conditions applicable to the project.

1. Where fasteners are subject to loosening or turning out from thermal and structural movements, wind loads, or vibration, use self-locking devices.
2. Reinforce framing members as required to receive fastener threads.
3. Exposed fasteners are prohibited on faces exposed to view. Provide concealed fasteners and expansion provisions.

J. Anchors:

1. Anchor Bolts (Anchor Rods): Cast-in-place anchors specified in Section 05 05 23 having minimum 60 ksi tensile strength.
2. Other Anchors:
   a. Three-way adjustable anchors that accommodate fabrication and installation tolerances in material and finish compatible with adjoining materials and recommended by the manufacturer.
   b. Concrete and Masonry Inserts: Hot-dip galvanized cast-iron, malleable-iron, or steel inserts complying with ASTM A 123 or ASTM A 153 requirements

K. Cleaning Agent and Cloth: Supplied, required, recommended, or accepted by the structural sealant manufacturer.

L. Other Accessories: Provide other accessories and secondary items normally furnished or necessary for a complete installation; or supplied, required, recommended, or accepted by the manufacturer for actual in-service conditions applicable to the project.

PART 3 - EXECUTION

3.1 EXAMINATION

A. Oversight: Ensure an adequate number of supervisors are present and proper supervision practices are followed at the project site before the installer begins work and at all times during installation.

B. Verification: Verify in-place supporting and adjacent construction conforms to the manufacturer's requirements or recommendations and satisfies all other conditions that might affect the quality of installation or the durability, appearance, or performance of installed and adjacent items.

C. Evaluation and Assessment:

1. Identify project conditions that do not conform to the manufacturer's instructions and other requirements and recommendations.
2. Perform or arrange and pay costs for all remedial work necessary to correct or

improve deficient conditions, without limitation, before the installer begins work.

3.2 INSTALLATION

A. General Requirements:

1. Install entrance doors and storefronts using materials and methods required, recommended, or accepted by the manufacturer, along with manufacturer-recommended accessories and techniques.
2. Set items true to line, to required levels and lines, and plumb, level, and square, without warp or rack, with flush well-fitted joints, and in alignment with adjacent construction
3. Perform drilling and fitting as required or necessary for an accurate fit and complete installation.
4. Installed entrance doors and storefronts must be warrantable. Do not install, correct, or replace entrance doors and storefronts in a manner that results in any warranty or guarantee becoming void.

B. Special Techniques:

1. Use concealed fasteners and anchorages. Provide washer head fasteners with bonded sealing washers where required to protect metal surfaces and to make weathertight connections.
2. Form closely-fitted joints with exposed connections accurately located and secured.
3. Provide uniform-width perimeter reveals and opening sealants and joint fillers as indicated.
4. Install concealed gaskets, flashings, and joint fillers as the storefront installation progresses.

C. Interface with Adjacent Items: Provide materials, components, and accessories normally furnished or necessary to securely attach entrance doors and storefronts to supporting construction.

D. Entrance Door Installation Tolerances: Install entrance doors within the following clearance variations.

a. Jambs and Head: 1/8-inch plus or minus 1/16 inch.
b. Between Edges of Pairs of Doors: 1/8-inch plus or minus 1/16-inch.
c. Between Bottom of Door and Top of Threshold: Maximum 1/4-inch.
d. Between Bottom of Door and Top of Finish Floor (No Threshold): Maximum 1/4-inch.

E. Storefront Installation Tolerances: Install storefronts within the following tolerance variations.

1. Maximum Variation from True Position: Not more than 1/8-inch in 12 feet nor more than 1/4-inch over any total length.
2. Maximum Variation from Plane: Not more than 1/8-inch in 12 feet nor more than 1/2-inch over any total length.
3. Maximum Out of Plumb: Not more than 1/8-inch in 10 feet nor more than 1/4-inch in any 40-foot run.
4. Maximum Out of Level: Not more than 1/8-inch in 20 feet nor more than 1/4-inch in any 40-foot run.
5. Maximum Misalignment of Adjacent Members: 1/16-inch.

6. Maximum Offset between Components at Joints:
   a. In-line Surfaces: Not more than 1/16-inch, except that offset are not allowed at welded joints.
   b. Corners: : Not more than 1/32-inch
7. Squareness: Not more than 1/8-inch difference in diagonal measurements.
8. Maximum Bow: Not more than 1/16-inch in any four foot framing length.

3.3 ADJUSTING

A. Verify smooth and quiet entrance door and hardware operation.

B. Lubricate and adjust operating parts and hardware to function properly, free from warp, twist, binding, and distortion. Confirm latches and locks engage securely without forcing or binding.

C. Replace items that do not operate freely in a safe and reliable manner.

3.4 FIELD QUALITY CONTROL

A. Site Tests and Inspections:
   1. General: Include site tests and inspections as part of the work of this specification section. The Owner's testing and inspection agency performs tests and inspections.
      a. Schedule and arrange all tests and inspections.
      b. Coordinate all work and the final construction schedule with all tests and inspections.
      c. Coordinate tests and inspections with the work of other specification sections, and other specified, required, or necessary tests and inspections.
      d. Furnish all work, equipment, tools, facilities, personnel, and controls necessary for each test and inspection.
      e. Arrange tests and inspections by notifying the Owner, the testing and inspection agency, the installer, the manufacturer's representative, and the Architect at least 5 business days before work is ready for testing or inspection.
      f. Witness all site tests and inspections.
      g. Receive test and inspection reports and distribute to the installer and the manufacturer's representative.
   2. Required Tests:
      a. Water Leakage Hose Tests: Perform water leakage hose tests in conformance with ASTM AAMA 501.2 (fixed glazing assemblies) and AAMA 502 (operable window units).
      b. Air and Water Leakage Chamber Tests: Perform air and water leakage chamber tests in conformance with AAMA 502, Test method B.

3.5 CORRECTION AND REPAIR

A. Non-conforming, damaged, and defective work must be brought into conformance with the Contract Documents. Correct and repair as necessary, without limitation, including arranging all correction and repair work and paying all correction and repair costs, until accepted in writing by the Architect.

B. Corrective and repair work must be performed in conformance with a correction and repair plan submitted to and accepted in writing by the Architect before correction or repair work begins. At a minimum, correction and repair plans must include

1. written descriptions of non-conforming, damaged, and defective work;
2. supporting sketches, diagrams, photographs, and other visual depictions of non-conforming, damaged, and defective work; and
3. similar written descriptions and visual depictions of Contractor-proposed corrections and repairs.

C. Arrange and pay costs for removing and replacing work that cannot be corrected or repaired to the Architect's acceptance.

3.6 CLEANING

A. Waste Management: After completing the work of this specification section, leave work areas free from debris, waste, scrap, equipment, tools, and other items.

3.7 PROTECTION

A. Protect installed entrance doors and storefronts in place from soiling, deterioration, and damage until Substantial Completion.

B. Do not store anything adjacent to or against installed entrance doors and storefronts unless they are protected from damage, as accepted in writing by the manufacturer's representative. Do not use installed entrance doors and storefronts as work surfaces.

C. Remove protection when it's no longer needed and before Substantial Completion.

END OF SECTION

SECTION 08 41 44

FIRE-RATED INTERIOR STOREFRONT

PART 1 - GENERAL

1.1 SUMMARY

A. Section Includes:
1. Fire-rated entrances and storefronts and storefronts.
2. Supplementary components and accessories normally furnished or necessary for a complete installation, whether or not such items are indicated on the Drawings or included in the Specifications.

1.2 REFERENCES

A. Abbreviations and Acronyms:
1. AAMA: American Architectural Manufacturers Association.
2. WDMA: Window & Door Manufacturers Association.
3. CSA: Canadian Standards Association.

B. Definitions:
1. Manufacturer: Means the entrance door or storefront manufacturer, as the context admits, unless otherwise indicated.
2. Failure: Includes noise or vibration caused by movement, material deterioration beyond normal weathering, water leakage through fixed glazing and framing areas, and failure of operating components.

1.3 ADMINISTRATIVE REQUIREMENTS

A. Coordination:
1. Coordinate building opening tolerances with entrance door manufacturing and erection tolerances.
2. Coordinate hardware preparations, handing, and reinforcement requirements and locations with the Drawings, door schedule, and selected hardware sets.
3. Coordinate entrance door hardware finishes with other door hardware finishes.
4. Coordinate building opening tolerances with storefront manufacturing and erection tolerances. The manufacturer must accommodate building frame tolerances.

B. Delegated Design Requirements:

1. Engineer, fabricate, assemble, and install entrance doors and storefronts that conform to the profiles indicated and other Contract Document requirements; meet specified performance criteria; and result in structurally sound, non-corroding, and weathertight assemblies that accommodate, resist, distribute, or transfer in-service loads without incipient or catastrophic failure.
2. Maintain visual design concept indicated, including sizes, profiles, and alignments. Deviation from visual design concept is non-conforming work and prohibited without prior written acceptance by the Architect.

C. Performance Requirements:

1. General: Exterior Entrances and storefronts must establish and maintain a continuous watertight seal without failure.
2. Design Pressure: Calculate in conformance with American Society of Civil Engineers/ Structural Engineering Institute publication ASCE/SEI 7, "*Minimum Design Loads and Associated Criteria for Buildings and other Structures*".
3. Superstructure Deflection and Story Drift: Accommodate design displacement of adjacent stories indicated on the structural drawings.
4. Seismic Loads: Resist, distribute, or transfer seismic loads indicated on the structural drawings without incipient or catastrophic failure.
5. Perpendicular Deflection (Convexity and Concavity):
   a. Storefront Framing Spans up to 13 Feet 6 Inches: Framing members may not deflect more than L/175 or 3/4-inch, whichever is less, measured normal to the assembly plane.
   b. Storefront Framing Spans between 13 Feet 6 Inches and 40 Feet: Framing members may not deflect more than L/240 plus 1/4-inch, measured normal to the assembly plane.
   c. Storefront Spans Greater than 40 Feet: Provide structural analysis.
   d. Cantilever Deflection: Not more than 2L/175, where "L" is the cantilever length, measured normal to the assembly plane.
   e. Center of Glass Deflection: Not more than L/50 of short side length, or one inch, whichever is less, measured normal to the assembly plane.
6. Parallel Deflection (Sagging): Limit deflection under maximum design load to either 1/8-inch or not more than 25-percent reduction in glass bite, whichever is smaller measured in line with the assembly plane.
   a. Minimum Clearance Between Framing Members and Top of Glazing or Other Fixed Component Immediately Below: At least 1/8-inch.
   b. Minimum Clearance Between Framing Members and Operable Components, Including Doors and Entrances: At least 1/16-inch.
   c. Maximum Twisting of Doors and Entrances: Twisting (rotation) of horizontal framing members caused by glass weight may not exceed one degree, measured between the ends and the center of each span.
7. Permanent Deformation: No permanent deformation at design pressure. Limit permanent deformation to 0.2 percent of the clear span of any framing member, when tested in conformance with ASTM E 330 (uniform static pressure test).
   a. Maximum Positive and Negative Test Loads: Equal to at least the specified design pressure.
   b. Maximum Positive and Negative Proof Loads for Vertical Glazing: At least equal to 1.5 times the design pressure.
   c. Maximum Positive and Negative Proof Loads for Sloped Glazed Assemblies: At least equal to 2.0 times the design pressure.
   d. Duration of Maximum Test and Proof Loads: 10 seconds.
   e. Measurement: The number and location of deflection measurements must be shown on the mockup shop drawings prior to testing. At a minimum, indicate measurement of deflection at maximum deflection and end deflection locations
8. Thermal Expansion and Contraction: Accommodate movement resulting from at least 120 deg. F ambient and 180 deg. F material surface temperature differentials (changes).

9. Dissimilar Metal Corrosion Protection: Permanently isolate metal surfaces from direct contact with incompatible materials and other potentially corrosive substrates as specified in Section 05 50 00.

D. Preinstallation Meeting:

1. Hold a meeting after submittal approval and at least 10 business days before beginning installation.
2. During the meeting, review the Contract Documents, submittals, project conditions, and installation sequence and methods, including special details and conditions that might affect installation
3. Identify and discuss adverse or unfavorable conditions detrimental to protecting stored materials or to installation; or to the quality, durability, appearance, or performance of installed entrances and storefronts. Resolve each condition.
4. Finalize construction schedule.
5. Record significant discussions and distribute meeting minutes. Do not begin installation until disagreements are successfully resolved to the satisfaction of all parties.

1.4 SUBMITTALS

A. Action Submittals: Submit the following for responsive action (formal review and approval).

1. Product Data:
   a. Submit manufacturer's product data, specifications, typical installation details, and all other information necessary to show conformance to the Contract Documents, excluding material safety data sheets (MSDSs), which are returned to the Contractor without review or responsive action.
   b. Submit sample warranties with warranty periods, terms, conditions, exclusions, and remedies explicitly defined for each warranty, including clear warranty period start dates. (e.g., date of manufacture, purchase, installation, Beneficial Occupancy, Substantial Completion, Final Completion, etc.)
2. Shop Drawings:
   a. Submit dimensioned plans and elevations drawn to scale and showing entrance door and storefront layout, materials, construction, and finishes. Show locations, sizes, and extents of all items, accessories, and trim. Label manufactured items by product name.
   b. Include project-specific dimensioned details drawn to scale showing conditions not detailed on the product data; or that are detailed, but not in a manner specific to the project. Cross-reference entrance door details to door schedule. Cross- reference storefront details to plans and elevations.
3. Samples:
   a. Submit at least 6-inch long representative samples of storefront framing color and finish.
   b. Submit sample of glass.

B. Informational Submittals: Submit the following for information (informal review: responsive action not expected or required, except to record non-conformance with submittal requirements).

1. Manufacturer's Instructions: Submit manufacturer-prepared published instructions for proper installation of furnished entrance door and storefronts.

a. If manufacturer's instructions are unavailable or do not apply to specific project conditions, then consult the manufacturer's representative and obtain project-specific supplemental instructions printed on manufacturer's letterhead.

b. Promptly distribute supplemental instructions to the Architect, who may have comments that lead to contract modifications or minor changes in the work.

2. Delegated Design Submittals: Together with shop drawings, submit engineering calculations demonstrating conformance to the Contract Documents and all impacts of delegated design scope of work on other work.

a. Calculations must be explicit and legible and must incorporate distinct cross-references to submitted shop drawings in sufficient quantity to render the calculations readily intelligible and reviewable.

b. At a minimum, calculations must include design loads; section-property computations; analysis of fasteners, anchors, attachments, and connectors; and signature and seal of the licensed professional engineer responsible for preparing them.

c. Test reports are not an acceptable substitute for calculations and are returned to the Contractor without review or responsive action, except to record non-conformance with this requirement.

3. Qualification Statements: Submit written descriptions confirming experience specified in QUALITY ASSURANCE article below.

C. Closeout Submittals: Submit the following to the Architect as a condition of project closeout.

1. Maintenance Data: Submit copies of manufacturer's instructions and other requirements and recommendations for entrance door maintenance, cleaning, and repair.

2. Warranty Documentation: Submit final warranties signed by the manufacturer's representative with complete terms indicated for all warranties covering items furnished or installed under this specification section.

1.5 QUALITY ASSURANCE

A. Regulatory Requirements:

1. Doors must conform to the requirements of California Building Code Chapter 11B.

B. Source Limitations:

1. Entrance doors and storefronts must be obtained through one source from the same manufacturer (to ensure compatibility, regulatory conformance, and a warrantable installation).

a. Certain items may be obtained from more than one manufacturer, but only when used for separate installations.

b. Items provided for each different installation must be obtained from the same source and manufacturer.

2. Provide secondary materials, components, accessories and other items from sources required, recommended, or accepted by the primary manufacturer for actual in- service conditions applicable to the project.

C. Quality Standard Requirements:

1. Entrance Product Standard: Comply with the requirements of ANSI/AAMA/WDMA publication ANSI/AAMA/WDMA 101/I.S.2/NAFS-02, "*Windows, Skylights and Glass*

Doors".

2. Entrance Performance Standard: Comply with the requirements of AAMA/WDMA/CSA publication AAMA/WDMA/CSA 101/I.S.2/A440, "*NAFS - North American Fenestration Standard/Specification for Windows, Doors, and Skylights*".

D. Qualifications:

1. Manufacturer: Company or individuals must have at least 10 years' experience manufacturing entrance doors and storefronts installed on at least 200 previous projects similar to this project in size, material, design, and complexity.
2. Installer: Company or individuals must have at least 5 years' experience installing entrance doors and storefronts for at least 30 previous projects similar to this project in size, material, design, and complexity. Installer must be a current member of SDI.
3. Supervisors: Individuals must have at least 7 years' experience installing entrance doors and storefronts for at least 30 previous projects similar to this project in size, material, design, and complexity, including at least 2 years' supervisory experience directing and leading entrance and storefront installers.
4. Engineer: Must be a licensed professional structural engineer registered to practice in California having at least 10 years' experience performing the kind of engineering services indicated for at least 20 previous projects similar to this project in size, material, design, and complexity.

1.6 HANDLING

A. Receiving: Inspect all deliveries for deteriorated, damaged, and defective items.

1. Reject items that are not packaged in a manner that prevents damage; or that exhibit deterioration or damage or have damaged or open packaging or containers.
2. Unload and store only inspected and accepted items.

B. Storage: Store unloaded items as shipped and in conformance with manufacturer's instructions and other requirements and recommendations for storage. Furnish adequate dunnage and bracing during storage.

1. Prevent stored items from contacting the floor or ground, from soiling and staining, and from deterioration and damage.
2. If items are not stored in an enclosed location, then cover the tops and sides with securely-tied, waterproof, and breathable covers. Unvented polyethylene tarpaulins do not qualify as breathable covers and are prohibited. (due to potential accumulation of moisture beneath tarpaulin during certain environmental conditions)
3. Incline covered items to ensure maximum drainage of accumulated moisture.
4. Do not leave items uncovered where they might be exposed to weather or become wet; or exposed to other sources of deterioration and damage.

C. Handling: Handle items in conformance with manufacturer's instructions and other requirements and recommendations, and in a manner that that prevents damage.

D. Damaged Item Replacement: Promptly remove and replace deteriorated, damaged, or defective entrances or storefront materials with undamaged new items or materials that do not exhibit deterioration, damage, or defects.

E. Packaging Waste Management: Do not burn or bury construction waste at the project site. Remove and legally dispose of all construction waste away from the project site.

1.7 WARRANTY

A. Manufacturer Warranty: Furnish to the Owner a written manufacturer warranty for products, components, and accessories against all patent and latent defects, and incipient and catastrophic failure for 5 years; and for finishes against color fading, chalking, cracking, checking, peeling, and adhesive failure for 20 years.

B. Installer Guarantee: Furnish to the Owner a written guarantee for the work of this specification section against all defects in materials and workmanship for 2 years from date of acceptance. Guarantees must be properly prepared and signed on the guarantee form in Division 01.

PART 2 - PRODUCTS

2.1 FIRE-RATED ENTRANCES AND STOREFRONTS

A. Description: Fire-rated, stick built assembly fabricated from glass and steel, including framing members, glazing, sealants, perimeter trims, stools, accessories, shims and anchors, perimeter sealing of framing, and other components necessary for a complete, and performance-tested fire-rated assembly.

B. Products: Provide “Fireframes Aluminum Series” manufactured by Technical Glass Products (TGP).

C. Requisite Properties:
1. Fire-Resistance Rating: Must provide at least a 60-minute fire-resistance rating.
2. Glazing System: Provide 4-sided captured glazed assembly with extruded steel glazing beads supplied by the storefront manufacturer.
3. Glazing Plane: Center.
4. Interior Mullion Construction: Steel profiles with aluminum covers as indicated.
5. Setting Blocks: Calcium silicate.

2.2 FIRE-RESISTANCE RATED GLAZING

A. Description: Clear and wireless fire- and impact safety-rated glass ceramic material conforming to ANSI Z97.1 and CPSC 16CFR1201 (Cat. I and II).

B. Products: Provide Pilkington “Pyrostop 60-101” interior glazing, 87% daylight transmission.

C. Requisite Properties:
1. Fire-Resistance Rating: 60 minutes with fire hose test.
2. Thickness: nominal 7/8-inch.

D. Identification: Each fire-rated glazing panel must be labeled with a permanent logo indicating the name of product, manufacture, testing laboratory (UL), fire rating period, safety glazing standards, and date of manufacture.

2.3 ACCESSORIES

A. Spacer Shims: Continuous shims fabricated from load-bearing, non-leaching, high-impact

polystyrene.

B. Glazing Gaskets:
   1. Firm, Dense Gaskets: Elastomeric silicone rubber conforming to ASTM C 1115, CH7S2 unless another type, hardness, class or surface is supplied, required, recommended, approved, or accepted by the glass installer.
   2. Soft, Closed Cell Gaskets: ASTM C 509. Provide silicone rubber.

C. Cleaners, Primers, Sealers: Supplied, required, recommended, or accepted by the manufacturer or fabricator.

D. Anchors and Fasteners: Provide as supplied, required, recommended, or accepted by the manufacturer.

E. Other Accessories: Provide other accessories and similar secondary items supplied, required, recommended, or accepted by the manufacturer, and as necessary for a complete installation.

2.4 FIRE-RESISTANCE RATED GLAZING

A. Description: Clear and wireless fire- and impact safety-rated glass ceramic material conforming to ANSI Z97.1 and CPSC 16CFR1201 (Cat. I and II) with high performance surface-applied fire-rated film.

B. Products: Provide “FireLite NT” manufactured by Technical Glass Products (TGP), or equal.

C. Requisite Properties:
   1. Fire-Resistance Rating: 90 minutes with fire hose test.
   2. Thickness: 5mm (nominal 3/16-inch).
   3. Surface Grade: Premium.

D. Identification: Each fire-rated glazing panel must be labeled with a permanent logo indicating the name of product, manufacture, testing laboratory (UL), fire rating period, safety glazing standards, and date of manufacture.

2.5 ACCESSORIES

A. Spacer Shims: Continuous shims fabricated from load-bearing, non-leaching, high-impact polystyrene.

B. Glazing Gaskets:
   1. Firm, Dense Gaskets: Elastomeric silicone rubber conforming to ASTM C 1115, CH7S2, unless another type, hardness, class or surface is supplied, required, recommended, or accepted by the glass installer.
   2. Soft, Closed Cell Gaskets: ASTM C 509. Provide silicone rubber.

C. Cleaners, Primers, and Sealers: Supplied, required, recommended, or accepted by the glass manufacturer or glazing fabricator.

D. Fastenings: Provide backings, inserts, loose connection hardware, fasteners, anchors, attachments, connectors, and other items supplied, required, recommended, or accepted by

the manufacturer for actual in-service conditions applicable to the project.

1. Where fasteners are subject to loosening or turning out from thermal and structural movements, wind loads, or vibration, use self-locking devices.
2. Reinforce framing members as required to receive fastener threads.
3. Exposed fasteners are prohibited on faces exposed to view. Provide concealed fasteners and expansion provisions.

E. Other Accessories: Provide other accessories and secondary items normally furnished or necessary for a complete installation; or supplied, required, recommended, or accepted by the manufacturer for actual in-service conditions applicable to the project.

PART 3 - EXECUTION

3.1 EXAMINATION

A. Oversight: Ensure an adequate number of supervisors are present and proper supervision practices are followed at the project site before the installer begins work and at all times during installation.

B. Verification: Verify in-place supporting and adjacent construction conforms to the manufacturer's requirements or recommendations and satisfies all other conditions that might affect the quality of installation or the durability, appearance, or performance of installed and adjacent items.

C. Evaluation and Assessment:

1. Identify project conditions that do not conform to the manufacturer's instructions and other requirements and recommendations.
2. Perform or arrange and pay costs for all remedial work necessary to correct or improve deficient conditions, without limitation, before the installer begins work.

3.2 INSTALLATION

A. General Requirements:

1. Install entrance storefronts using materials and methods required, recommended, or accepted by the manufacturer, along with manufacturer-recommended accessories and techniques.
2. Set items true to line, to required levels and lines, and plumb, level, and square, without warp or rack, with flush well-fitted joints, and in alignment with adjacent construction
3. Perform drilling and fitting as required or necessary for an accurate fit and complete installation.
4. Installed entrance storefronts must be warrantable. Do not install, correct, or replace entrance doors and storefronts in a manner that results in any warranty or guarantee becoming void.

B. Special Techniques:

1. Use concealed fasteners and anchorages. Provide washer head fasteners with bonded sealing washers where required to protect metal surfaces and to make weathertight connections.
2. Form closely-fitted joints with exposed connections accurately located and secured.

3. Provide uniform-width perimeter reveals and opening sealants and joint fillers as indicated.
4. Install concealed gaskets, flashings, and joint fillers as the storefront installation progresses.

C. Interface with Adjacent Items: Provide materials, components, and accessories normally furnished or necessary to securely attach entrance doors and storefronts to supporting construction.

D. Storefront Installation Tolerances: Install storefronts within the following tolerance variations.
1. Maximum Variation from True Position: Not more than 1/8-inch in 12 feet nor more than 1/4-inch over any total length.
2. Maximum Variation from Plane: Not more than 1/8-inch in 12 feet nor more than 1/4-inch over any total length.
3. Maximum Out of Plumb: Not more than 1/8-inch in 10 feet.
4. Maximum Out of Level: Not more than 1/8-inch in 20 feet nor more than 1/4-inch in any 40-foot run.
5. Maximum Offset between Components at Joints:
   a. In-line Surfaces: Not more than 1/16-inch
   b. Corners: : Not more than 1/32-inch
6. Squareness: Not more than 1/8-inch difference in diagonal measurements.

3.3 CORRECTION AND REPAIR

A. Non-conforming, damaged, and defective work must be brought into conformance with the Contract Documents. Correct and repair as necessary, without limitation, including arranging all correction and repair work and paying all correction and repair costs, until accepted in writing by the Architect.

B. Corrective and repair work must be performed in conformance with a correction and repair plan submitted to and accepted in writing by the Architect before correction or repair work begins. At a minimum, correction and repair plans must include
1. written descriptions of non-conforming, damaged, and defective work;
2. supporting sketches, diagrams, photographs, and other visual depictions of non-conforming, damaged, and defective work; and
3. similar written descriptions and visual depictions of Contractor-proposed corrections and repairs.

C. Arrange and pay costs for removing and replacing work that cannot be corrected or repaired to the Architect's acceptance.

3.4 CLEANING

A. Waste Management: After completing the work of this specification section, leave work areas free from debris, waste, scrap, equipment, tools, and other items.

3.5 PROTECTION

A. Protect installed entrance doors and storefronts in place from soiling, deterioration, and damage until Substantial Completion.

B. Do not store anything adjacent to or against installed entrance doors and storefronts unless they are protected from damage, as accepted in writing by the manufacturer's representative. Do not use installed entrance doors and storefronts as work surfaces.

C. Remove protection when it's no longer needed and before Substantial Completion.

END OF SECTION

SECTION 08 71 00
DOOR HARDWARE

PART 1 - GENERAL

1.1 SUMMARY

A. Section Includes:

1. Door hardware, including electric hardware.
2. Cylinders.

B. Related Divisions:

1. Division 06 – door hardware installation
2. Division 07 – sealant at exterior thresholds
3. Division 08 – metal doors and frames, interior aluminum frames, wood doors, integrated security systems, specialty doors, storefront and glazed curtainwall systems.
4. Division 10 – operable partitions
5. Division 21 – fire and life safety systems
6. Division 28 – security access systems

C. Specific Omissions: Hardware for the following is specified or indicated elsewhere.

1. Windows.
2. Cabinets, including open wall shelving and locks.
3. Signs, except where scheduled.
4. Toilet accessories, including grab bars.
5. Installation.
6. Rough hardware.
7. Conduit, junction boxes & wiring.
8. Folding partitions, except cylinders where detailed.
9. Sliding aluminum doors, except cylinders where detailed.
10. Access doors and panels, except cylinders where detailed.
11. Corner Guards.
12. Welded steel gates and supports.

1.2 REFERENCES:

A. Use date of standard in effect as of Bid date.

1. American National Standards Institute
   a) ANSI 156.18 – Materials and Finishes.
   b) ICC/ANSI A117.1 - 2009 – Specifications for making buildings and facilities usable by physically handicapped people. [omit for CA work – not applicable]
2. BHMA – Builders Hardware Manufacturers Association
3. 2019 California Building Code
   a) Chapter 11B – Accessibility To Public Buildings, Public Accommodations, Commercial Buildings and Public Housing

4. DHI – Door and Hardware Institute
5. NFPA – National Fire Protection Association
   a) NFPA 80 2016 Edition – Standard for Fire Doors and Other Opening Protectives.
   b) NFPA 105 – Smoke and Draft Control Door Assemblies
   c) NFPA 252 – Fire Tests of Door Assemblies
6. UL – Underwriters Laboratories
   a) UL10C – Positive Pressure Fire Tests of Door Assemblies.
   b) UL 305 – Panic Hardware
7. WHI – Warnock Hersey Incorporated State of California Building Code
8. Local applicable codes
9. SDI – Steel Door Institute
10. WI – Woodwork Institute
11. AWI – Architectural Woodwork Institute
12. NAAMM – National Association of Architectural Metal Manufacturers

B. Abbreviations

1. Manufacturers**:** see table at 2.1.A of this section
2. Finishes**:** see 2.7 of this section.

1.3 SUBMITTALS & SUBSTITUTIONS

A. SUBMITTALS**:** Submit six copies of schedule per D. Only submittals printed one sided will be accepted and reviewed. Organize vertically formatted schedule into "Hardware Sets" with index of doors and headings, indicating complete designations of every item required for each door or opening. Minimum 10pt font size. Include following information**:**

1. Type, style, function, size, quantity and finish of hardware items.
2. Use BHMA Finish codes per ANSI A156.18.
3. Name, part number and manufacturer of each item.
4. Fastenings and other pertinent information.
5. Location of hardware set coordinated with floor plans and door schedule.
6. Explanation of abbreviations, symbols, and codes contained in schedule.
7. Mounting locations for hardware.
8. Door and frame sizes, materials and degrees of swing.
9. List of manufacturers used and their nearest representative with address and phone number.
10. Catalog cuts.
11. Point-to-point wiring diagrams.
12. Manufacturer's technical data and installation instructions for electronic hardware.
13. Date of jobsite visit

B. Bid and submit manufacturer's updated/improved item if scheduled item is discontinued.

C. Deviations**:** Highlight, encircle or otherwise identify deviations from "Schedule of Finish Hardware" on submittal with notations clearly designating those portions as deviating from this section.

D. If discrepancy between drawings and scheduled material in this section, bid the more expensive of the two choices, note the discrepancy in the submittal and request direction from Architect for resolution.

E. Substitutions per Division 1. Include product data and indicate benefit to the Project. Furnish operating samples on request.

F. Furnish as-built/as-installed schedule with closeout documents, including keying schedule, riser and point-to-point wiring diagrams, manufacturers' installation, adjustment and maintenance information, and supplier's final inspection report.

1.4 QUALITY ASSURANCE**:**

A. Qualifications**:**

1. Hardware supplier**:** direct factory contract supplier, available at reasonable times during course of work for project hardware consultation to Owner, Architect and Contractor.

a) Responsible for detailing, scheduling and ordering of finish hardware. Detailing implies that the submitted schedule of hardware is correct and complete for the intended function and performance of the openings.

B. Hardware**:** Free of defects, blemishes and excessive play. Obtain each kind of hardware (latch and locksets, exit devices, hinges and closers) from one manufacturer.

C. Exit Doors**:** Operable from inside with single motion without the use of a key or special knowledge or effort.

D. Fire-Rated Openings**:** NFPA 80 compliant. Hardware UL10C (positive pressure) compliant for given type/size opening and degree of label. Provide proper latching hardware, non-flaming door closers, approved-bearing hinges, and resilient seals. Coordinate with wood door section for required intumescent seals. Furnish openings complete.

E. Furnish hardware items required to complete the work in accordance with specified performance level and design intent, complying with manufacturers' instructions and code requirements.

F. Pre-Installation Meetings**:** Initiate and conduct with supplier, installer and related trades, coordinate materials and techniques, and sequence complex hardware items and systems installation. Include manufacturers' representatives of locks, panic hardware and door closers in the meetings. Convene prior to commencement of related work.

1.5 DELIVERY, STORAGE AND HANDLING**:**

A. Delivery**:** coordinate delivery to appropriate locations (shop or field).

1. Permanent keys and cores**:** secured delivery direct to Owner's representative.

B. Acceptance at Site**:** Items individually packaged in manufacturers' original containers, complete with proper fasteners and related pieces. Clearly mark packages to indicate contents, locations in hardware schedule and door numbers.

C. Storage**:** Provide securely locked storage area for hardware, protect from moisture, sunlight, paint, chemicals, dust, excessive heat and cold, etc.

1.6 PROJECT CONDITIONS AND COORDINATION**:**

A. Where exact types of hardware specified are not adaptable to finished shape or size of members requiring hardware, provide suitable types having as nearly as practical the same operation and quality as type specified, subject to Architect's approval.

B. Coordination**:** Coordinate hardware with other work. Furnish hardware items of proper design for use on doors and frames of the thickness, profile, swing, security and similar requirements indicated, as necessary for proper installation and function, regardless of omissions or conflicts in the information on the Contract Documents. Furnish related trades with the following information**:**

1. Location of embedded and attached items to concrete.
2. Location of wall-mounted hardware, including wall stops.
3. Location of finish floor materials and floor-mounted hardware.
4. At masonry construction, coordinate with the anchoring and hollow metal supplier prior to frame installation by placing a strip of insulation, wood, or foam, on the back of the hollow metal frame behind the rabbet section for continuous hinges, as well as at rim panic hardware strike locations, silencers, coordinators, and door closer arm locations. When the frame is grouted in place, the backing will allow drilling and tapping without dulling or breaking the installer's bits.
5. Locations for conduit and raceways as needed for electrical, electronic and electro-pneumatic hardware items. Fire/life-safety system interfacing. Point-to-point wiring diagrams plus riser diagrams to related trades.
6. Coordinate: low-voltage power supply locations.
7. Coordinate: back-up power for doors with automatic operators.
8. Coordinate: flush top rails of doors at outswinging exteriors, and throughout where adhesive-mounted seals occur.
9. Manufacturers' templates to door and frame fabricators.

C. Check Shop Drawings for doors and entrances to confirm that adequate provisions will be made for proper hardware installation.

D. Environmental considerations**:** segregate unused recyclable paper and paper product packaging, uninstalled metals, and plastics, and have these sent to a recycling center.

E. Prior to submittal, carefully inspect existing conditions to verify finish hardware required to complete Work, including sizes, quantities, existing hardware scheduled for re-use, and sill condition material. If conflict between the specified/scheduled hardware and existing conditions, submit request for direction from Architect. Include date of jobsite visit in the submittal.

1. Submittals prepared without thorough jobsite visit by qualified hardware expert will be rejected as non-compliant.

1.7 WARRANTY**:**

A. Part of respective manufacturers' regular terms of sale. Provide manufacturers' written warranties.

B. Include factory order numbers with close-out documents to validate warranty information, required for Owner in making future warranty claims:

C. Minimum warranties:

1.	Locksets**:**	Three years
2.	Extra Heavy-Duty Cylindrical Lock:	Ten Years
3.	Exit Devices**:**	Three years mechanical One year electrical
4.	Closers**:**	Thirty years mechanical Two years electrical
5.	Hinges**:**	One year
6.	Other Hardware	Two years

1.8 COMMISSIONING**:**

A. Conduct these tests prior to request for certificate of substantial completion**:**

1. With installer present, test door hardware operation with climate control system and stairwell pressurization system both at rest and while in full operation.
2. With installer, access control contractor and electrical contractor present, test electrical, electronic and electro-pneumatic hardware systems for satisfactory operation.
3. With installer and electrical contractor present, test hardware interfaced with fire/life-safety system for proper operation and release.

1.9 REGULATORY REQUIREMENTS**:** (delete this article in entirety for projects not under DSA's *or OSHPD's* auspices)(code citations are CBC 2019)

A. Locate latching hardware between 34 inches to 44 inches above the finished floor, per 2019 California Building Code, Section 11B-404.2.7.

1. Panic hardware: locate between 36 inches to 44 inches above the finished floor.

B. Handles, pull, latches, locks, other operable parts**:**

1. Readily openable from egress side with one hand and without tight grasping, tight pinching, or twisting of the wrist to operate. 2019 California Building Code Section 11B-309.4.
2. Force required to activate the operable parts: 5.0 pounds maximum, per 2019 California Building Code Section 11B-309.4.

C. Adjust doors to open with not more than 5.0-pounds pressure to open at exterior doors and 5.0-pounds at interior doors. As allowed per 2019 California Building Code Section 11B-404.2.9, local authority may increase the allowable pressure for fire doors to achieve positive latching, but not to exceed 15-pounds.

1. Exception: exterior doors' pressure-to-open may be increased to 8.5-pounds if: at a single location, and one of a bank of eight leafs or fraction of eight, and one leaf of this bank is fitted with a low- or high-energy operator.

D. Low-energy powered doors: comply with ANSI/BHMA A156.19. Reference: 2019 California Building Code Section 11B-404.2.9.

1. Where powered door serves an occupancy of 100 or more, provide back-up battery power or stand-by generator power, capable of supporting a minimum of 100 cycles.
2. Actuators, vertical bar type: minimum 2-inches wide, 30-inches high, bottom located minimum 5-inches above floor or ground, top located minimum 35-inches above floor or ground. Displays International Symbol of Accessibility, per 2019 California Building Code Section 11B-703.7.
3. Actuators, plate type: use two at each side of the opening. Minimum 4-inches diameter or 4-inches square. Displays International Symbol of Accessibility, per 2019 California Building Code Section 11B-703.7. Locate centerline of lower plate between 7- and 8-inches above floor or ground, and upper plate between 30- and 44-inches above floor or ground.
4. Actuator location: conspicuously located, clear and level floor/ground space for forward or parallel approach.

E. Adjust door closer sweep periods so that from an open position of 90 degrees, the door will take at least 5 seconds to move to a point 12 degrees from the latch, measured to the landing side of the door, per 2019 California Building Code Section 11B-404.2.8.

1. Spring hinges: adjust for 1.5 seconds minimum for 70 degrees to fully-closed.

F. Smooth surfaces at bottom 10 inches of push sides of doors, facilitating push-open with wheelchair footrests, per 2019 California Building Code Section 11B-404.2.10.

1. Applied kickplates and armor plates: bevel the left and right edges; free of sharp or abrasive edges.
2. Tempered glass doors without stiles: bottom rail may be less than 10 inches if top leading edge is tapered 60 degrees minimum.

G. Door opening clear width no less than 32 inches, measured from face of frame stop, or edge of inactive leaf of pair of doors, to door face with door opened to 90 degrees. Hardware projection not a factor in clear width if located above 30 inches and below 80 inches, and the hardware projects no more than 4 inches. 2019 California Building Code Section 11B-404.2.3.

1. Exception: doors not requiring full passage through the opening, that is, to spaces less than 24 inches in depth, may have the clear opening width reduced to 20 inches. Example: shallow closets.
2. Door closers and overhead stops: not less than 78 inches above the finished floor or ground, per 2019 California Building Code 11B-307.4.

H. Thresholds**:** floor or landing no more than 0.50 inches below the top of the threshold of the doorway, per 2019 California Building Code Section 11B-404.2.5. Vertical rise no more than 0.25 inches, change in level between 0.25 inches and 0.50 inches**:** beveled to slope no greater than 1**:**2 (50 percent slope). 2019 California Building Code Section 11B-303.2 & ~.3.

I. Floor stops**:** Do not locate in path of travel. Locate no more than 4 inches from walls, per DSA Policy #99-08 (Access).

J. Pairs of doors with independently-activated hardware both leafs**:** limit swing of right-hand or right-hand-reverse leaf to 90 degrees to protect persons reading wall-mounted tactile signage, per 2019 California Building Code Section 11B-703.4.2.

K. Door and door hardware encroachment**:** when door is swung fully-open into means-of-egress path, the door may not encroach/project more than 7 inches into the required exit width, with the exception of door release hardware such as lockset levers or panic hardware. These hardware items must be located no less than 34-inches and no more than 48-inches above the floor/ground. 2019 California Building Code, Section 1005.7.1.

2. In I-2 occupancies, surface mounted latch release hardware, mounted to the side of the door facing away from the adjacent wall where the door I sin the open position, is not exempt from the inclusion in the 7-inch maximum encroachment, regardless of its mounting height, per 2019 California Building Code, Section 1005.7.1 at Exception 1.

L. New buildings that are included in public schools (kindergarten through 12th grade) state funded projects and receiving state funding pursuant to Leroy F. Green, School Facilities Act of 1998, California Education Code Sections 17070.10 through 17079, and that are submitted to the Division of the State Architect for plan review after July 1, 2011 in accordance with the Education Code 17075.50, shall include locks that allow doors to classrooms and any room with an occupancy of five or more persons to be locked from the inside. The locks shall conform to the specification and requirements found in Section 1010.1.9. 2019 California Building Code Section 1010.1.11

Exceptions:

1. Door that are locked from the outside at all times such as, but not limited to, janitor's closet, electrical room, storage room, boiler room, elevator equipment room and pupil restroom.

2. Reconstruction projects that utilize original plans in accordance with California Administrative Code, Section 4-314.
3. Existing relocatable buildings that are relocated within same site in accordance with California Administrative Code, Section 4-314.

PART 2 PRODUCTS

2.1 MANUFACTURERS:

A. Manufacturers and their abbreviations used in this schedule:

ABH	Architectural Builders Hardware
BES	Best
GLY	Glynn-Johnson Hardware
HAG	Hager
IVE	H. B. Ives
LCN	LCN Closers
SCE	Schlage Electronics
SCH	Schlage Lock Company
VON	Von Duprin
ZER	Zero International

2.2 HINGING METHODS:

A. Drawings typically depict doors at 90 degrees, doors will actually swing to maximum allowable. Use wide-throw conventional or continuous hinges as needed up to 8 inches in width to allow door to stand parallel to wall for true 180-degree opening. Advise architect if 8-inch width is insufficient.

B. Conform to manufacturer's published hinge selection standard for door dimensions, weight and frequency, and to hinge selection as scheduled. Where manufacturer's standard exceeds the scheduled product, furnish the heavier of the two choices, notify Architect of deviation from scheduled hardware.

C. Conventional Hinges: Steel or stainless steel pins and approved bearings. Hinge open widths minimum, but of sufficient throw to permit maximum door swing.

1. Outswinging exterior doors: non-ferrous with non-removable (NRP) pins and security studs.
2. Non-ferrous material exteriors and at doors subject to corrosive atmospheric conditions.

D. Continuous Hinges**:**

1. Geared-type aluminum.

   a) Use wide-throw units where needed for maximum degree of swing, advise architect if commonly available hinges are insufficient.
   b) If units are used at storefront openings, color-coordinate hinge finish with storefront color. Custom anodizing and custom powdercoat finishes subject to Architect approval.

E. Pivots**:** high-strength forged bronze or stainless steel, tilt-on precision bearing and bearing pin.

2. Bottom and intermediate pivots**:** adjustability of minus 0.063 inch, plus 0.125 inch.

2.3 LOCKSETS, LATCHSETS, DEADBOLTS**:**

A. Mortise Locksets and Latchsets**:** as scheduled.

1. Chassis**:** cold-rolled steel, handing field-changeable without disassembly.
2. Universal lock case – 10 functions in one case.
3. Floating mounting tabs automatically adjusts to fit a beveled door edge.
4. Latchbolts**:** 0.75 inch throw stainless steel anti-friction type.
5. Lever Trim**:** through-bolted, accessible design, cast lever or solid extruded bar type levers as scheduled. Filled hollow tube design unacceptable.

   a) Spindles**:** security design independent breakaway. Breakage of outside lever does not allow access to inside lever's hubworks to gain wrongful entry.
   b) Inside lever applied by screwless shank mounting – no exposed trim mount screws.
   c) Levers rotate up or down for ease of use.
   d) Vandalgard locks**:** locked lever freely rotates down while remaining securely locked. This feature prevents damage to internal lock components when subjected to excessive force.

6. Furnish solid cylinder collars with wave springs. Wall of collar to cover rim of mortise cylinder.
7. Turnpieces**:** accessible offset turn-lever design not requiring pinching or twisting motions to operate.
8. Deadbolts**:** stainless steel 1-inch throw.
9. Electric operation**:** Manufacturer-installed continuous duty solenoid.
10. Strikes**:** 16 gage curved steel, bronze or brass with 1 inch deep box construction, lips of sufficient length to clear trim and protect clothing.
11. Scheduled Lock Series and Design**:** Schlage L series, 03A design.
12. Certifications**:**

    e) ANSI A156.13, Grade 1 Operational, Grade 1 Security.
    f) ANSI/ASTM F476-84 Grade 31 UL Listed.

13. Accessibility: Require not more than 5 lb to retract the latchbolt or deadbolt, or both, per CBC 2019 11B-404.2.7 and 11B-309.4.

2.4 EXIT DEVICES / PANIC HARDWARE

A. General features**:**

1. Independent lab-tested 1,000,000 cycles.
2. Push-through push-pad design. No exposed push-pad fasteners, no exposed cavities when operated. Return stroke fluid dampeners and rubber bottoming dampeners, plus anti-rattle devices.
3. Deadlocking latchbolts, 0.75 inch projection.
4. End caps**:** impact-resistant, flush-mounted. No raised edges or lips to catch carts or other equipment.
5. No exposed screws to show through glass doors.
6. Non-handed basic device design with center case interchangeable with all functions, no extra parts required to effect change of function.
7. Releasable in normal operation with 15-pound maximum operating force per UBC Standard 10-4, and with 32-pound maximum pressure under 250-pound load to the door.
8. Exterior doors scheduled with XP-series devices**:** Static load force resistance of at least 2000 pounds.
9. Accessibility: Require not more than 5 lb to retract the latchbolt, per CBC 2019 11B-404.2.7 and 11B-309.4.
   a) Mechanical method: Von Duprin “AX-“ feature, where touchpad directly retracts the latchbolt with 5 lb or less of force. Provide testing lab certification confirming that the mechanical device is independent third-party tested to meet this 5 lb requirement.
   b) Electrical method: Von Duprin’s “RX-QEL-“, where lightly pressing the touchpad with 5 lb or less of force closes an electric switch, activating quiet electric latch retraction.

B. Specific features**:**

1. Non-Fire Rated Devices**:** cylinder dogging.
2. Lever Trim**:** breakaway type, forged brass or bronze escutcheon min. 0.130 inch thickness, compression spring drive, match lockset lever design.
3. Rod and latch guards with sloped full-width kickplates for doors fitted with surface vertical rod devices with bottom latches.
4. Fire-Labeled Devices**:** UL label indicating “Fire Exit Hardware”. Vertical rod devices less bottom rod (LBR) unless otherwise scheduled.
5. Delayed Egress Devices**:** As scheduled with Von Duprin panic and DE5300.
6. Electrically Operated Devices**:** Single manufacturer source for electric latch retraction devices, electrically controlled trim, power transfers, power supplies, monitoring switches and controls.

A. ELECTRONIC ACCESS CONTROL LOCKSETS – OFFLINE MORTISE-TYPE

B. MANUFACTURER: “AD-200-MS” SERIES, AS MANUFACTURED BY SCHLAGE, AN ALLEGION COMPANY; SHALL MATCH FACILITY HARDWARE.

C. Requirements: Offline electronic locksets to comply with the following requirements.

1. Type: Mortise, field-reversible handing.
2. Backset: 2-3/4-inch (70 mm), nominal.
3. Latchbolt: 3-piece, beveled, stainless steel with 3/4-inch (19 mm) throw and anti-friction latch.
4. Chassis: Shall accommodate ANSI standard mortise lock prep for 1-3/4-inch (44 mm) doors standard, or 1-3/8-inch (35 mm) to 2-3/4-inch (70 mm) thick doors in 1/8-inch (3 mm) increments.
5. Applicable Standards:

    a. Listed, UL 294 - The Standard of Safety for Access Control System Units.
    b. Compliant with A156.25 and A156.13 Series 1000, Grade 1 Operational and Security.
    c. Certified to UL10C, FCC Part15, Florida Building Code Standards TAS 201 large missile impact, TAS 202 and TAS 203.
    d. Compliant with ASTM E330 for door assemblies.
    e. Compliant with ICC / ANSI A117.1, NFPA 101, NFPA 80, and Industry Canada RSS-210.

6. Lockset Functions: Provide locks with following functions, as scheduled, that are field configurable without taking the lock off the door:

    a. Classroom / Storeroom 70.

7. Emergency Override: Lockset shall have the ability to utilize emergency mechanical key override with the following manufacturer’s key systems in the lever:

    a. Full Size Interchangeable Cores from Schlage, Sargent, Corbin Russwin, Medeco, and Yale format by Medeco in up to 6 pin cylinders

8. Levers:

    a. Vandal Resistance: Exterior (secure side) lever designed with ability to rotate freely while door remains securely locked, preventing damage to internal lock components from vandalism by excessive force.
    b. Operation: Outside and inside levers operate independently of each other.
    c. Style: Tubular (03)

9. Power Supply:

    a. Lockset powered by four AA batteries with options for eight AA batteries or a 12V or 24V DC power supply.
    b. Lockset shall have ability to communicate battery status.

10. Features: Locksets shall incorporate the following features.

a. Visual tri-colored LED indicators that indicate activation, additional PIN code credential required, operational systems status, system error conditions and low power conditions.
b. Visual bi-colored LED indicator on interior that is capable of indicating secured/unsecured status of device to occupants on interior.
c. Audible feedback that can be enabled or disabled.
d. Onboard processor with memory capacity of 5,000 users, 5,000 event audit history, up to 16 time zones and up to 32 calendar events.
e. Tamper-Resistant Screws: Tamper torx screws on inside escutcheon for increased security.

11. Adaptability:

a. Networking Capabilities: Network adaptable without removing device from door. Lockset to have the ability to be upgraded in the field from a standalone battery powered configuration to a wireless networked configuration without being removed from the door.
b. Field changeable Reader Modules: Lockset to have the ability to change credential reader technologies without being removed from door.

12. Switches: Provide locksets with the following switches, standard:

a. Door Position Switch
b. Interior Cover Tamper Guard
c. Mechanical Key Override
d. Request to Exit
e. Request to Enter
f. Lock/Unlock Status (Clutch Position).

13. Credential Reader:

a. Credential Reader Configuration: Provide credential reader modules in the following configurations, as indicated in door hardware sets.

1) Keypad.

14. Operation:

a. Lockset shall have ability to be configured at door by handheld programming device the length of time device is unlocked upon access grant.
b. Lockset shall have the ability to communicate identifying information such as firmware versions, hardware versions, serial numbers, and manufacturing dates by handheld programming device.

2.6 CLOSERS

A. Surface Closers**:** [4040XP]

1. Full rack-and-pinion type cylinder with removable non-ferrous cover and cast iron body. Double heat-treated pinion shaft, single piece forged piston, chrome-silicon steel spring.
2. ISO 2000 certified. Units stamped with date-of-manufacture code.

3. Independent lab-tested 10,000,000 cycles.
4. Non-sized, non-handed, and adjustable. Place closer inside building, stairs, and rooms.
5. Plates, brackets and special templating when needed for interface with particular header, door and wall conditions and neighboring hardware.
6. Adjust doors to open with not more than 5.0-pounds pressure to open at exterior doors and 5.0-pounds at interior doors. As allowed per 2016 California Building Code Section 11B-404.2.9, local authority may increase the allowable pressure for fire doors to achieve positive latching, but not to exceed 15-pounds.
   a) Exception: exterior doors' pressure-to-open may be increased to 8.5-pounds if: at a single location, and one of a bank of eight leafs or fraction of eight, and one leaf of this bank is fitted with a low- or high-energy operator.
7. Separate adjusting valves for closing speed, latching speed and backcheck, fourth valve for delayed action where scheduled.
8. Extra-duty arms (EDA) at exterior doors scheduled with parallel arm units.
9. Exterior door closers**:** tested to 100 hours of ASTM B117 salt spray test, furnish data on request.
10. Exterior doors**:** seasonal adjustments not required for temperatures from 120 degrees F to -30 degrees F, furnish checking fluid data on request.
11. Non-flaming fluid, will not fuel door or floor covering fires.
12. Pressure Relief Valves (PRV) not permitted.

B. Overhead Concealed Closers**:** Power transmitted to door separately from hanging means. Closer spindle does not support the door. Cast iron cylinders with hydraulically checked rack and pinion construction and single piece forged pistons. Separate non-critical sweep and latch speed valves.

13. (6030) double-acting, concealed in 1-3/4inch x 4inch tube, forged single-lever arm & extruded track power transmission, concealed-in-track bumpers where scheduled, independent latch and power adjustment valves for either direction of swing.

C. Fire/Life-Safety Hold-Open Closers [4040SE]**:** Integrate with UL listed fire/life-safety alarm systems.

2.7 OTHER HARDWARE

A. Automatic Flush Bolts**:** Low operating force design.

B. Overhead Stops**:** Non-plastic mechanisms and finished metal end caps. Field-changeable hold-open, friction and stop-only functions.

C. Kick Plates**:** Four beveled edges, .050 inches minimum thickness, height and width as scheduled. Sheet-metal screws of bronze or stainless steel to match other hardware.

D. Door Stops**:** Provide stops to protect walls, casework or other hardware.

1. Unless otherwise noted in Hardware Sets, provide floor type with appropriate fasteners. Where floor type cannot be used, provide wall type. If neither can be used, provide overhead type.

2. Locate overhead stops for maximum possible opening. Consult with Owner for furniture locations. Minimum**:** 90deg stop / 95deg deadstop. Note degree of opening in submittal.

E. Seals**:** At head & jambs. Inelastic, rigid back, not subject to stretching. Self-compensating for warp, thermal bow, door settling, and out-of-plumb. Adhesive warranted for life of installation.

1. Proposed substitutions**:** submit for approval.
2. Three-fingered type at hinge jambs of doors fitted with continuous hinges where jamb leaf of hinge is fastened to the frame reveal.

F. Sound-reducing adjustable seals: coordinate lockset backsets, rim exit device strikes, and parallel arm closers. Fabricate 7ga “Z”-brackets as bridging pieces to facilitate installation. Brackets: mild carbon steel, or stainless steel.

G. Automatic door bottoms**:** low operating force units. Doors with automatic door bottoms plus head and jamb seals cannot require more than two pounds operating force to open when closer is disconnected.

1. Include automatic type door bottoms, as opposed to fixed sweeps, at stairs and elevator lobbies to allow fine-tuning of pressurization systems.

H. Thresholds**:** As scheduled and per details. Comply with CBC 2019 11B-404.2.5. Substitute products**:** certify that the products equal or exceed specified material’s thickness. Proposed substitutions**:** submit for approval.

2. Saddle thresholds**:** 0.125 inches minimum thickness.
3. Exteriors**:** Seal perimeter to exclude water and vermin. Use sealant complying with requirements in Division 7 "Thermal and Moisture Protection". Minimum 0.25 inch diameter fasteners and lead expansion shield anchors, or Red-Head #SFS-1420 (or approved equivalent) Flat Head Sleeve Anchors. National Guard Products’ “COMBO” or Pemko Manufacturing’s “FHSL”.
4. Fire-rated openings, 90-minutes or less duration**:** use thresholds to interrupt floor covering material under the door where that material has a critical radiant flux value less than 0.22 watts per square centimeter, per NFPA 253. Use threshold unit as scheduled. If none scheduled, include a 0.25in high 5in wide saddle in the bid, and request direction from Architect.
   a) City of Los Angeles**:** regardless of critical radiant flux values of organic-material floor coverings, furnish metal, concrete, or stone thresholds at fire-rated openings.
5. Fire-rated openings, 3-hour duration**:** Thresholds, where scheduled, to extend full jamb depth.
6. Acoustic openings**:** Set units in full bed of Division-7-compliant, leave no air space between threshold and substrate.
7. Plastic plugs with wood or sheet metal screws are not an acceptable substitute for specified fastening methods.
8. Fasteners**:** Generally, exposed screws to be Phillips or Robertson drive. Pinned TORX drive at high security areas. Flat head sleeve anchors (FHSL) may be slotted drive. Sheet metal and wood screws**:** full-thread. Sleeve nuts**:** full length to prevent door compression.

I. Through-bolts**:** Do not use. Coordinate with wood doors; ensure provision of proper blocking to support wood screws for mounting panic hardware and door closers. Coordinate with metal doors and frames; ensure provision of proper reinforcement to support machine screws for mounting panic hardware and door closers.

1. Exception**:** surface-mounted overhead stops, holders, and friction stays.

J. Silencers**:** Interior hollow metal frames, 3 for single doors, 4 for pairs of doors. Leave no unfilled/uncovered pre-punched silencer holes. Intent**:** door bears against silencers, seals make minimal contact with minimal compression – only enough to effect a seal.

K. Key Control Software**:** Same manufacturer as key cylinders, supply to Owner.

2.8 FINISH**:**

A. Generally**:** BHMA 626 Satin Chromium.

1. Areas using BHMA 626: furnish push-plates, pulls and protection plates of BHMA 630, Satin Stainless Steel, unless otherwise scheduled.

B. Door closers**:** factory powder coated to match other hardware, unless otherwise noted.

1. Provide satin-chrome plated arms, tracks and covers where scheduled bright metallic powder coat (MTLPC) not available.

2.9 KEYING REQUIREMENTS**:**

A. Key System**:** Existing Schlage Everest T key system. Initiate and conduct meeting(s) with Owner to determine system structure, furnish Owner's written approval of the system; do not order keys or cylinders without written confirmation of actual requirements from the Owner. Furnish temporary construction-keyed and permanent cylinders. Contractor to demonstrate to the Owner that temporary keys no longer operate the locking cylinders at the end of the project.

PART 3 - EXECUTION

3.1 ACCEPTABLE INSTALLERS**:**

A. Can read and understand manufacturers' templates, suppliers' hardware schedule and printed installation instructions. Can readily distinguish drywall screws from manufacturers' furnished fasteners. Available to meet with manufacturers' representatives and related trades to discuss installation of hardware.

3.2 PREPARATION**:**

A. Ensure that walls and frames are square and plumb before hardware installation. Make corrections before commencing hardware installation. Installation denotes acceptance of wall/frame condition.

B. Locate hardware per SDI-100 and applicable building, fire, life-safety, accessibility, and security codes.

1. Notify Architect of code conflicts before ordering material.
2. Locate latching hardware between 34 inches to 44 inches above the finished floor, per California Building Code, Section 1010.1.9.2 and 11B-404.2.7.
3. Locate panic hardware between 36 inches to 44 inches above the finished floor.
4. Where new hardware is to be installed near existing doors/hardware scheduled to remain, match locations of existing hardware.

C. Overhead stops**:** before installing, determine proposed locations of furniture items, fixtures, and other items to be protected by the overhead stop's action.

D. Existing frames and doors to be retrofitted with new hardware**:**

1. Field-verify conditions and dimensions prior to ordering hardware. Fill existing hardware cut outs not being reused by the new hardware. Remove existing hardware not being reused, return to Owner unless directed otherwise.
2. Remove existing floor closers not scheduled for reuse, fill cavities with non-shrinking concrete and finish smooth.
3. Cut and weld existing steel frames currently prepared with 2.25 inch height strikes. Cut an approximate 8 inch section from the strike jamb and weld in a reinforced section to accommodate specified hardware's strike.
4. Provide wrap-around repair plates at doors where required to cover the original preparation and allow installation of new hardware.

3.3 INSTALLATION

A. Install hardware per manufacturer's instructions and recommendations. Do not install surface-mounted items until finishes have been completed on substrate. Set units level, plumb and true to line and location. Adjust and reinforce attachment substrate for proper installation and operation. Remove and reinstall or replace work deemed defective by Architect.

1. Gaskets**:** install jamb-applied gaskets before closers, overhead stops, rim strikes, etc; fasten hardware over and through these seals. Install sweeps across bottoms of doors before astragals, cope sweeps around bottom pivots, trim astragals to tops of sweeps.
2. When hardware is to be attached to existing metal surface and insufficient reinforcement exists, use RivNuts, NutSerts or similar anchoring device for screws.
3. Use manufacturers' fasteners furnished with hardware items, or submit Request for Substitution with Architect.
4. Replace fasteners damaged by power-driven tools.

B. Locate floor stops no more that 4 inches from walls and not within paths of travel. See paragraph 2.2 regarding hinge widths, door should be well clear of point of wall reveal. Point of door contact no closer to the hinge edge than half the door width. Where situation is questionable or difficult, contact Architect for direction.

C. Core concrete for exterior door stop anchors. Set anchors in approved non-shrink grout.

D. Locate overhead stops for minimum 90 degrees at rest and for maximum allowable degree of swing.

E. Drill pilot holes for fasteners in wood doors and/or frames.

F. Lubricate and adjust existing hardware scheduled to remain. Carefully remove and give to Owner items not scheduled for reuse.

G. Field-verify existing conditions and measurements prior to ordering hardware. Fill existing hardware cut outs not being used by the new hardware.

H. Remove existing hardware not being reused. Tag and bag removed hardware, turn over to Owner.

I. Where existing wall conditions will not allow door to swing using the scheduled hinges, provide wide-throw hinges and if needed, extended arms on closers.

J. Provide manufacturer's recommended brackets to accommodate the mounting of closers on doors with flush transoms.

3.4. ADJUSTING

A. Adjust and check for proper operation and function. Replace units, which cannot be adjusted to operate freely and smoothly.

1. Hardware damaged by improper installation or adjustment methods**:** repair or replace to Owner's satisfaction.
2. Adjust doors to fully latch with no more than 1 pound of pressure.
   a) Door closer valves: turn valves clockwise until at bottom – do not force. Turn valves back out one and one-half turns and begin adjustment process from that point. Do not force valves beyond three full turns counterclockwise.
3. Adjust delayed-action closers on fire-rated doors to fully close from fully-opened position in no more than 10 seconds.
4. Adjust door closers per 1.9 this section.

B. Inspection of fire door assemblies and means-of-egress panic-hardware doors**:** Per 2016 NFPA-80 5.2.1: hire an independent third-party inspection service to prepare a report listing these doors, and include a statement that there are zero deficiencies with the fire-rated assemblies and the openings with panic hardware. [make reference to Div 01 testing/commissioning section] [have Architect's specwriter consider using this text: Certification, Testing and Quality Control shall be in accordance with Division 01 45 23 Testing and Inspection services. All doors hardware and installation will be inspected by a third party selected by the architect/owner

Div 01 45 23:

1. Per 2016 NFPA-80 5.2.1: Use a third party inspector not associated with the construction, supply or installation of this project to develop a field survey of the doors and hardware. Survey is to be done by a member certified as a FDAI (Fire Door Assembly Inspector), Certified AHC (Architectural Hardware Consultant) or a certified testing laboratory: UL or Intertek. Certified Inspectors may be found at DHI.org, Intertek, or CAFDI.org.]

C. Fire-rated doors**:**

1. Wood doors**:** adjust to 0.125 inches clearance at heads, jambs, and meeting stiles.
2. Steel doors**:** adjust to 0.063 inches minimum to 0.188 inches maximum clearance at heads, jambs, and meeting stiles.
3. Adjust wood and steel doors to 0.75 inches maximum clearance (undercut) above threshold or finish floor material under door.

D. Final inspection**:** Installer to provide letter to Owner that upon completion installer has visited the Project and has accomplished the following**:**

1. Has re-adjusted hardware.
2. Has evaluated maintenance procedures and recommend changes or additions, and instructed Owner's personnel.
3. Has identified items that have deteriorated or failed.
4. Has submitted written report identifying problems.

3.5 DEMONSTRATION**:**

A. Demonstrate mechanical hardware and electrical, electronic and pneumatic hardware systems, including adjustment and maintenance procedures.

3.6 PROTECTION/CLEANING**:**

A. Cover installed hardware, protect from paint, cleaning agents, weathering, carts/barrows, etc. Remove covering materials and clean hardware just prior to substantial completion.

B. Clean adjacent wall, frame and door surfaces soiled from installation / reinstallation process.

3.7 SCHEDULE OF FINISH HARDWARE

A. See door schedule in drawings for hardware set assignments.

B. Do not order material until submittal has been reviewed, stamped, and signed by Architect's door hardware consultant.

Hardware Group No. 01
For use on Door #(s):
214 243

QTY		DESCRIPTION	CATALOG NUMBER		FINISH	MFR
3	EA	HINGE	3CB1 5 X 4.5		630	IVE
1	EA	ELEC CLASSROOM LOCK	AD-200-MS-70-KP-TLR-J 4AA BATTERY		626AM	SCE
1	EA	FSIC CORE	23-030 EV29 T		626	SCH
1	EA	SURFACE CLOSER	4040XP RW/PA		689	LCN
1	EA	ARMOR PLATE	8400 36" X 2" LDW B-CS		630	IVE
1	EA	WALL STOP	WS406/407CVX		630	IVE
1	EA	GASKETING	488SGY PSA		Gy	ZER

KEY TO EXISTING SCHLAGE EVEREST T SYSTEM.

Hardware Group No. 02
For use on Door #(s):
242

QTY		DESCRIPTION	CATALOG NUMBER		FINISH	MFR
3	EA	HINGE	3CB1 5 X 4.5		630	IVE
1	EA	ELEC CLASSROOM LOCK	AD-200-MS-70-KP-TLR-J 4AA BATTERY		626AM	SCE
1	EA	FSIC CORE	23-030 EV29 T		626	SCH
1	EA	OH STOP	100S		630	GLY
1	EA	SURFACE CLOSER	4040XP RW/PA		689	LCN
1	EA	ARMOR PLATE	8400 36" X 2" LDW B-CS		630	IVE
1	EA	GASKETING	488SGY PSA		Gy	ZER

KEY TO EXISTING SCHLAGE EVEREST T SYSTEM.

Hardware Group No. 03
For use on Door #(s):
240 245 246 255 E204 E248

QTY		DESCRIPTION	CATALOG NUMBER		FINISH	MFR
3	EA	HINGE	3CB1 4.5 X 4.5		630	IVE
1	EA	ELEC CLASSROOM LOCK	AD-200-MS-70-KP-TLR-J 4AA BATTERY		626AM	SCE
1	EA	FSIC CORE	23-030 EV29 T		626	SCH
1	EA	SURFACE CLOSER	4040XP RW/PA		689	LCN
1	EA	KICK PLATE	8400 12" X 2" LDW B-CS		630	IVE
1	EA	WALL STOP	WS406/407CVX		630	IVE
1	EA	GASKETING	488SGY PSA		Gy	ZER

KEY TO EXISTING SCHLAGE EVEREST T SYSTEM.

Hardware Group No. 04
For use on Door #(s):
244 254

QTY		DESCRIPTION	CATALOG NUMBER		FINISH	MFR
3	EA	HINGE	3CB1 4.5 X 4.5		630	IVE
1	EA	ELEC CLASSROOM LOCK	AD-200-MS-70-KP-TLR-J 4AA BATTERY		626AM	SCE
1	EA	FSIC CORE	23-030 EV29 T		626	SCH
1	EA	SURFACE CLOSER	4040XP RW/PA		689	LCN
1	EA	ARMOR PLATE	8400 36" X 2" LDW B-CS		630	IVE
1	EA	WALL STOP	WS406/407CVX		630	IVE
1	EA	GASKETING	488SGY PSA		Gy	ZER

KEY TO EXISTING SCHLAGE EVEREST T SYSTEM.

Hardware Group No. 05
For use on Door #(s):
249

QTY		DESCRIPTION	CATALOG NUMBER		FINISH	MFR
3	EA	HINGE	3CB1 4.5 X 4.5		630	IVE
1	EA	ELEC CLASSROOM LOCK	AD-200-MS-70-KP-TLR-J 4AA BATTERY		626AM	SCE
1	EA	FSIC CORE	23-030 EV29 T		626	SCH
1	EA	OH STOP	100S		630	GLY
1	EA	SURFACE CLOSER	4040XP RW/PA		689	LCN
1	EA	KICK PLATE	8400 12" X 2" LDW B-CS		630	IVE
1	EA	GASKETING	488SGY PSA		Gy	ZER

KEY TO EXISTING SCHLAGE EVEREST T SYSTEM.

Hardware Group No. 06
For use on Door #(s):
253

QTY		DESCRIPTION	CATALOG NUMBER		FINISH	MFR
3	EA	HINGE	3CB1 4.5 X 4.5		630	IVE
1	EA	ELEC CLASSROOM LOCK	AD-200-MS-70-KP-TLR-J 4AA BATTERY		626AM	SCE
1	EA	FSIC CORE	23-030 EV29 T		626	SCH
1	EA	OH STOP	100S		630	GLY
1	EA	SURFACE CLOSER	4040XP RW/PA		689	LCN
1	EA	ARMOR PLATE	8400 36" X 2" LDW B-CS		630	IVE
1	EA	GASKETING	488SGY PSA		Gy	ZER

KEY TO EXISTING SCHLAGE EVEREST T SYSTEM.

Hardware Group No. 07
For use on Door #(s):
251 256

QTY		DESCRIPTION	CATALOG NUMBER		FINISH	MFR
3	EA	HINGE	3CB1 4.5 X 4.5		630	IVE
1	EA	ELEC CLASSROOM LOCK	AD-200-MS-70-KP-TLR-J 4AA BATTERY		626AM	SCE
1	EA	FSIC CORE	23-030 EV29 T		626	SCH
1	EA	OH STOP & HOLDER	100F		630	GLY
1	EA	KICK PLATE	8400 12" X 2" LDW B-CS		630	IVE
1	EA	GASKETING	488SGY PSA		Gy	ZER

KEY TO EXISTING SCHLAGE EVEREST T SYSTEM.

Hardware Group No. 08
For use on Door #(s):
235

QTY		DESCRIPTION	CATALOG NUMBER		FINISH	MFR
3	EA	HINGE	3CB1 4.5 X 4.5		630	IVE
1	EA	ELEC CLASSROOM LOCK	AD-200-MS-70-KP-TLR-J 4AA BATTERY		626AM	SCE
1	EA	FSIC CORE	23-030 EV29 T		626	SCH
1	EA	OH STOP & HOLDER	100H		630	GLY
1	EA	ARMOR PLATE	8400 36" X 2" LDW B-CS		630	IVE
1	EA	GASKETING	488SGY PSA		Gy	ZER

KEY TO EXISTING SCHLAGE EVEREST T SYSTEM.

Hardware Group No. 09
For use on Door #(s):
203 E202

QTY		DESCRIPTION	CATALOG NUMBER		FINISH	MFR
3	EA	HINGE	3CB1 4.5 X 4.5		630	IVE
1	EA	STOREROOM LOCK	L9080T 03A		630AM	SCH
1	EA	FSIC CORE	23-030 EV29 T		626	SCH
1	EA	SURFACE CLOSER	4040XP RW/PA		689	LCN
1	EA	KICK PLATE	8400 12" X 2" LDW B-CS		630	IVE
1	EA	WALL STOP	WS406/407CVX		630	IVE
1	EA	GASKETING	488SGY PSA		Gy	ZER

KEY TO EXISTING SCHLAGE EVEREST T SYSTEM.

Hardware Group No. 10
For use on Door #(s):
250 257

QTY		DESCRIPTION	CATALOG NUMBER		FINISH	MFR
3	EA	HINGE	3CB1 4.5 X 4.5 NRP		630	IVE
1	EA	STOREROOM LOCK	L9080T 03A		630AM	SCH
1	EA	FSIC CORE	23-030 EV29 T		626	SCH
1	EA	ELECTRIC STRIKE	6211 FSE CON 12/16/24/28 VAC/VDC		630	VON
1	EA	OH STOP	100S		630	GLY
1	EA	SURFACE CLOSER	4040XP RW/PA		689	LCN
1	EA	KICK PLATE	8400 12" X 2" LDW B-CS		630	IVE
1	EA	GASKETING	488SGY PSA		Gy	ZER
1	EA	POWER SUPPLY	PS902 120/240 VAC		LGR	SCE

CARD READER, ELECTRIFIED HARDWARE, POWER SUPPLY, DPS, AND WIRING BY SECURITY CONTRACTOR; COORDINATION ITEMS: POWER/CONDUIT/WIRING/ELECTRONIC SECURITY SYSTEM; ALL ACCESS CONTROL EQUIPMENT SPECIFIED UNDER SECTION 28 13 11 BY SECURITY CONTRACTOR.
KEY TO EXISTING SCHLAGE EVEREST T SYSTEM.

Hardware Group No. 11
For use on Door #(s):
206 E208 E210 E212 E225 E227
E229 E231 E233

QTY		DESCRIPTION	CATALOG NUMBER		FINISH	MFR
3	EA	HINGE	3CB1HW 5 X 4.5		630	IVE
1	EA	PUSH/PULL LATCH	HL6 9010 2 3/4" A		630AM	SCH
1	EA	OH STOP	100S		630	GLY
1	EA	ARMOR PLATE	8400 36" X 2" LDW B-CS		630	IVE
1	EA	GASKETING	488SGY PSA		Gy	ZER

Hardware Group No. 12
For use on Door #(s):
E222 E223

QTY		DESCRIPTION	CATALOG NUMBER		FINISH	MFR
3	EA	HINGE	3CB1HW 5 X 4.5		630	IVE
1	EA	PUSH/PULL LATCH	HL6 9010 2 3/4" A		630AM	SCH
1	EA	OH STOP	100S		630	GLY
1	EA	SURFACE CLOSER	4040XP RW/PA		689	LCN
1	EA	ARMOR PLATE	8400 36" X 2" LDW B-CS		630	IVE
1	EA	GASKETING	488SGY PSA		Gy	ZER

Hardware Group No. 13
For use on Door #(s):
215 216

QTY		DESCRIPTION	CATALOG NUMBER		FINISH	MFR
3	EA	HINGE	3CB1HW 5 X 4.5		630	IVE
1	EA	PUSH/PULL LATCH	HL6 9010 2 3/4" A		630AM	SCH
1	EA	SURFACE CLOSER	4040XP RW/PA		689	LCN
1	EA	ARMOR PLATE	8400 36" X 2" LDW B-CS		630	IVE
1	EA	WALL STOP	WS406/407CVX		630	IVE
1	EA	GASKETING	488SGY PSA		Gy	ZER

Hardware Group No. 14
For use on Door #(s):
E218 E220

QTY		DESCRIPTION	CATALOG NUMBER		FINISH	MFR
3	EA	HINGE	3CB1HW 5 X 4.5		630	IVE
1	EA	PUSH/PULL LATCH	HL6 9010 2 3/4" A		630AM	SCH
1	EA	ARMOR PLATE	8400 36" X 2" LDW B-CS		630	IVE
1	EA	WALL STOP	WS406/407CVX		630	IVE
1	EA	GASKETING	488SGY PSA		Gy	ZER

Hardware Group No. 15
For use on Door #(s):
E209 E211 E219 E221 E224 E226
E228 E230 E232

QTY		DESCRIPTION	CATALOG NUMBER		FINISH	MFR
3	EA	HINGE	3CB1 4.5 X 4.5		630	IVE
1	EA	PRIVACY LOCK	L9040 03A L583-363 L283-722		630AM	SCH
1	EA	OH STOP	100S		630	GLY
1	EA	KICK PLATE	8400 12" X 2" LDW B-CS		630	IVE

Hardware Group No. 16
For use on Door #(s):
241

QTY		DESCRIPTION	CATALOG NUMBER		FINISH	MFR
3	EA	HINGE	3CB1 4.5 X 4.5		630	IVE
1	EA	PRIVACY LOCK	L9040 03A L583-363 L283-722		630AM	SCH
1	EA	SURFACE CLOSER	4040XP RW/PA		689	LCN
1	EA	KICK PLATE	8400 12" X 2" LDW B-CS		630	IVE
1	EA	WALL STOP	WS406/407CVX		630	IVE

Hardware Group No. 17
For use on Door #(s):
247 252 258 259

QTY		DESCRIPTION	CATALOG NUMBER		FINISH	MFR
3	EA	HINGE	3CB1 4.5 X 4.5		630	IVE
1	EA	PRIVACY LOCK	L9040 03A L583-363 L283-722		630AM	SCH
1	EA	SURFACE CLOSER	4040XP RW/PA		689	LCN
1	EA	KICK PLATE	8400 12" X 2" LDW B-CS		630	IVE
1	EA	WALL STOP	WS406/407CVX		630	IVE
1	EA	GASKETING	488SGY PSA		Gy	ZER

Hardware Group No. 18
For use on Door #(s):
207 213 217 234

QTY		DESCRIPTION	CATALOG NUMBER		FINISH	MFR
1	EA	PIVOT SET	7253 SET		626	IVE
1	EA	PRIVACY LOCK	L9040 03A L583-363 L283-722		630AM	SCH
1	EA	EMERGENCY STOP LATCH	SCR 4550		626	ABH
2	EA	KICK PLATE	8400 12" X 2" LDW B-CS		630	IVE
2	EA	WALL STOP	WS406/407CVX		630	IVE

Hardware Group No. 19
For use on Door #(s):
238

QTY		DESCRIPTION	CATALOG NUMBER		FINISH	MFR
1	EA	CONT. HINGE	112HD		628	IVE
1	EA	PANIC HARDWARE	PA-AX-98-NL-OP-110MD-WH		630AM	VON
1	EA	RIM CYLINDER	20-021		626	SCH
1	EA	ELECTRIC STRIKE	6113 FSE 12/24 VAC/VDC		630	VON
1	EA	90 DEG OFFSET PULL	8190EZHD 10" A		630-316	IVE
1	EA	SURFACE CLOSER	4040XP RW/PA		689	LCN
1	EA	PA MOUNTING PLATE	4040XP-18PA (AS REQ'D)		689	LCN
1	EA	WALL STOP	WS406/407CVX		630	IVE
1	EA	THRESHOLD	655A-223		A	ZER
1	EA	POWER SUPPLY	PS902 120/240 VAC		LGR	SCE

CARD READER, ELECTRIFIED HARDWARE, POWER SUPPLY, AND WIRING BY SECURITY CONTRACTOR; COORDINATION ITEMS: POWER/CONDUIT/WIRING/ELECTRONIC SECURITY SYSTEM;
ALL ACCESS CONTROL EQUIPMENT SPECIFIED UNDER SECTION 28 13 11 BY SECURITY CONTRACTOR.
ALUM SEALS BY DR MANUF
KEY TO EXISTING SCHLAGE EVEREST T SYSTEM.

Hardware Group No. 20
For use on Door #(s):
E260

QTY	DESCRIPTION	CATALOG NUMBER	FINISH	MFR
1		BALANCE OF HARDWARE EXISTING		

Hardware Group No. 21
For use on Door #(s):
E201

QTY	DESCRIPTION	CATALOG NUMBER	FINISH	MFR
1		BALANCE OF HARDWARE EXISTING		

Hardware Group No. 22
For use on Door #(s):
205

QTY		DESCRIPTION	CATALOG NUMBER		FINISH	MFR
4	EA	HINGE	5BB1HWSC 5		630	IVE
2	EA	ELECTRIC HINGE	5BB1HWSC 5 CON TW8		630	IVE
2	EA	ELEC PANIC HARDWARE	LX-9447-EO-LBR (& LESS TOP ROD)		626	VON
1	EA	DELAYED EXIT LOGIC CONTROLLER	DE5300 24 VDC		US32D	VON
1	EA	MORTISE CYLINDER	20-001 114 (VERIFY)		626	SCH
2	EA	MAGNETIC LOCK	M450P 12/24 VDC		628	SCE
2	EA	AUTO OPERATOR	SW200i		626	BES
2	EA	KICK PLATE	8400 12" X 1" LDW B-CS		630	IVE
1	EA	POWER SUPPLY	PS902 120/240 VAC		LGR	SCE

ELECTRIFIED HARDWARE, POWER SUPPLY, AND WIRING BY SECURITY CONTRACTOR;
COORDINATION ITEMS: POWER/CONDUIT/WIRING/ELECTRONIC SECURITY SYSTEM;
ALL ACCESS CONTROL EQUIPMENT SPECIFIED UNDER SECTION 28 13 11 BY SECURITY CONTRACTOR.
NOTE: USER PLANS TO NOT USE TOP & BOTTOM RODS. INPACT DEVICE NOT TESTED LESS BOTH RODS. THIS WILL VOID WARRANTY.
NOTE: LX SWITCH NOT TESTED WITH DE5300.
USE RELAY BETWEEN PS904 AND MAGLOCK. LX SWITCH DISCONNECTS POWER.
VALID CREDENTIAL WILL RELEASE MAGLOCK AND ENGAGE AUTO OPERATOR.
KEY TO EXISTING SCHLAGE EVEREST T SYSTEM.

Hardware Group No. 23
For use on Door #(s):
236 237 239

QTY		DESCRIPTION	CATALOG NUMBER		FINISH	MFR
1	SET	TRACK & HARDWARE	9675 (CONFIRM QTY REQ'D)			HAG
1	EA	SURFACE BOLT	SB1630 BL		652	IVE
2	EA	FLUSH PULL	227		626	IVE
1	EA	WALL STOP	411R-W		WHT	IVE

END OF SECTION

SECTION 08 80 00
GLAZING

PART 1 - GENERAL

1.01 SUMMARY

A. This Section includes glazing for the following products and applications, including those specified in other Sections where glazing requirements are specified by reference to this Section:

B. Interior Glazing:

1. Glazing at interior door lites
2. Glazing at interior fixed hollow metal framed windows
3. Glazing at exterior storefront door

C. Related Sections:

1. Section 08-11-13 “Hollow Metal Doors, Windows and Frames”
2. Section 08-41-13 “Aluminum-Framed Entrances and Storefronts.”

1.02 PERFORMANCE REQUIREMENTS

A. General: Provide glazing systems capable of withstanding normal thermal movement and wind and impact loads (where applicable) without failure, including loss or glass breakage attributable to the following: defective manufacture, fabrication, and installation; failure of sealants or gaskets to remain watertight and airtight; deterioration of glazing materials; or other defects in construction.

B. Glass Design: Glass thickness designations indicated are minimums and are for detailing only. Confirm glass thicknesses by analyzing Project loads and in-service conditions. Provide glass lites in the thickness designations indicated for various size openings, but not less than thicknesses and in strengths (annealed or heat treated) required to meet or exceed the following criteria:

1. Glass Thicknesses: Select minimum glass thicknesses to comply with ASTM E 1300, according to the following requirements:
   a. Probability of Breakage: 8 lites per 1000.

C. Thermal Movements: Provide glazing that allows for thermal movements resulting from the following maximum change (range) in ambient and surface temperatures acting on glass framing members and glazing components. Base engineering calculation on surface temperatures of materials due to both solar heat gain and nighttime-sky heat loss.

1.03 SUBMITTALS

A. Product Data: For each glass product and glazing material indicated.

B. Glazing Schedule: Use same designations indicated on Drawings for glazed openings in preparing a schedule listing glass types and thicknesses for each size opening and location.

C. Product Certificates: For glass and glazing products, from manufacturer.

1.04 QUALITY ASSURANCE

A. Installer Qualifications: An experienced installer who has completed glazing similar in material, design, and extent to that indicated for this Project; whose work has resulted in glass installations with a record of successful in-service performance.

B. Safety Glazing Products: Comply with testing requirements in CBC 2046 201.

1. Subject to compliance with requirements, obtain safety glazing products permanently marked with certification label acceptable to authorities having jurisdiction.
2. Where glazing units are specified in Part 2 articles for glazing lites more than 9 sq. ft. in area provide glazing products that comply with Category II materials, and for lites 9 sq. ft. or less in area, provide glazing products that comply with Category I or II materials.

C. Glazing Publications: Comply with published recommendations of glass product manufacturers and organizations below, unless more stringent requirements are indicated. Refer to these publications for glazing terms not otherwise defined in this Section or in referenced standards.

1. GANA Publications: GANA's "Glazing Manual."
2. AAMA Publications: AAMA GDSG-1, "Glass Design for Sloped Glazing," and AAMA TIR-A7, "Sloped Glazing Guidelines."
3. IGMA Publication for Sloped Glazing: IGMA TB-3001 "Sloped Glazing Guidelines."
4. IGMA Publication for Insulating Glass: SIGMA TM-3000, "Glazing Guidelines for Sealed Insulating Glass Units."

1.05 DELIVERY, STORAGE, AND HANDLING

A. Protect glazing materials according to manufacturer's written instructions and as needed to prevent damage to glass and glazing materials from condensation, temperature changes, direct exposure to sun, or other causes.

PART 2 - PRODUCTS

2.01 GLASS PRODUCTS

A. Safety Glazing: Provide safety glazing as required by CBC 2406 for hazardous locations as indicated on drawings.

1. Safety Glass: Fully tempered float glass.

2.02 GLAZING TAPES

A. Identical to product used in test assembly to obtain fire-resistance rating.

2.03 MISCELLANEOUS GLAZING MATERIALS

A. General: Provide products of material, size, and shape complying with referenced glazing standard, requirements of manufacturers of glass and other glazing materials for application indicated, and with a proven record of compatibility with surfaces contacted in installation.

B. Cleaners, Primers, and Sealers: Types recommended by sealant or gasket manufacturer.

C. Blocks and Spacers: Elastomeric blocks or continuous extrusions with a Shore, Type A durometer hardness required by glass manufacturer to maintain glass lites in place for installation indicated.

D. Perimeter Insulation for Fire-Resistive Glazing: Identical to product used in test assembly to obtain fire-resistance rating.

2.05 FABRICATION OF GLAZING UNITS

A. Fabricate glazing units in sizes required to glaze openings indicated for Project, with edge and face clearances, edge and surface conditions, and bite complying with written instructions of product manufacturer and referenced glazing publications, to comply with system performance requirements.

PART 3 - EXECUTION

3.01 EXAMINATION

A. Examine framing and glazing, with Installer present, for compliance with the following:

1. Manufacturing and installation tolerances, including those for size, squareness, and offsets at corners.

B. Proceed with installation only after unsatisfactory conditions have been corrected.

3.02 PREPARATION

A. Clean glazing channels and other framing members receiving glass immediately before glazing. Remove coatings not firmly bonded to substrates.

3.03 GLAZING, GENERAL

A. Comply with combined written instructions of manufacturers of glass, sealants, gaskets, and other glazing materials, unless more stringent requirements are indicated, including those in referenced glazing publications.

B. Protect glass edges from damage during handling and installation. Remove damaged glass from Project site and legally dispose of off Project site. Damaged glass is glass

with edge damage or other imperfections that, when installed, could weaken glass and impair performance and appearance.

C. Install blocks in rabbets, sized and located to comply with referenced glazing publications, unless otherwise required by glass manufacturer.

3.04 TAPE GLAZING

A. Position tapes on fixed stops so that, when compressed by glass, their exposed edges are flush with or protrude slightly above sightline of stops.

B. Install tapes continuously, but not necessarily in one continuous length. Do not stretch tapes to make them fit opening.

3.05 CLEANING AND PROTECTION

A. Protect glass from contact with contaminating substances resulting from construction operations, including weld splatter. If, despite such protection, contaminating substances do come into contact with glass, remove substances immediately as recommended by glass manufacturer.

B. Remove and replace glass that is broken, chipped, cracked, or abraded or that is damaged from natural causes, accidents, and vandalism, during construction period.

C. Wash glass on both exposed surfaces in each area of Project not more than four days before date scheduled for inspections that establish date of Substantial Completion. Wash glass as recommended in writing by glass manufacturer.

END OF SECTION

SECTION 09 00 10
GYPSUM BOARD AND METAL FRAMING SYSTEMS

A. Gypsum Board: United States Gypsum Company, or equivalent.

1. Gypsum Board: ASTM C36, fire resistive type (type x) throughout, UL rated; 5/8" thick, maximum permissible length; ends square cut, tapered edges.

2. Acoustic Gypsum Board: Multi-layer gypsum panels, ASTM C1766, fire resistive type (type x), UL rated; 5/8" thick, maximum permissible length; ends square cut, tapered edges.
   a. Certainteed “Silent FX”
   b. Pabco “QuietRock ES”

3. USG System Folder SA926—USG Shaft Wall Systems: Sheetrock Gypsum Liner Panels, Sheetrock Firecode X panels, C-H studs, E-studs, J-Runner, Jamb Strut. Install proprietary system per manufacturer's instructions.

B. Accessories:

1. Acoustical Insulation: ASTM C665; preformed glass fiber, friction fit type, unfaced, 3-1/2" thickness or as indicated on drawings.

2. Thermal Insulation at Furring: ASTM C612; preformed rigid or semi-rigid glass fiber boards, friction fit type, unfaced, 1-1/2" thickness or as indicated on drawings.

3. Acoustical Sealant: Non-hardening, non-skinning, for use in conjunction with gypsum board; No. 3131 - manufactured by W.W. Henry or approved equivalent.

4. Corner Beads and Trim: Metal, ASTM C 1047 and C 840, hot dip galvanized.

5. Joint Materials: ASTM C475; reinforced tape, joint compound, adhesive, and water.

6. Prime Coat: U.S. Gypsum “First Coat” or Hamilton “Prep Coat”.

C. Metal Framing and Furring Installation:

Metal Stud and Joist Framing: Manufacturer shall be a member of the Steel Stud Manufacturer's Association, and provide products covered by ICC Evaluation Report #3064P. Metal Studs and Tracks: ASTM C645 (non load bearing); galvanized sheet steel. Unless otherwise detailed, studs and track shall be 20 gauge material, Vertical studs shall have 1-5/8" flange; sill track shall have 1-1/2" flange; slip track shall have flanges as detailed. Dietrich "SLP-TRK" is an acceptable alternate to double slip track at top of wall condition.
Install studs and joists plumb and level, in accordance with ASTM C754 and manufacturer's ICC Evaluation Report, 16" on center typical U.N.O. Connections shall be welded and screwed as detailed on the drawings.

Install acoustical sealant where indicated and at gypsum board perimeter at metal framing, and at penetrations of partitions by conduit, pipe, duct work, and rough-in boxes.

Install double studs at open ends of partitions that do not intersect cross partitions.

Complete framing ready to receive gypsum board.

1. Stud sections- SSMA section with 1-5/8" flanges, 20 gauge minimum.

2. Bottom Tracks - SSMA section with 1-1/2" legs, 16 gauge minimum, unpunched.

3. Top Tracks, slip connection- SSMA section with 2" legs, 14 gauge minimum, unpunched.

4. Top Tracks, fixed connection- SSMA section with 1-1/2" legs, 16 gauge minimum, unpunched.

D. Bridging: Unpunched channel shaped members designed for use with the studs, formed from hot dip zinc coated steel, 16 gauge.

E. Strapping, Lateral Bracing, Clip Angles and other Accessories: Manufacturer's standard components formed from hot dip zinc coated steel, 16 gauge minimum.

F, Backing Plates:
1. Continuous backing plates installed behind cement board at inside face of parapet walls to receive fasteners for roofing base flashings: 16 gauge galvanized steel sheet.
2. For grab bars, handrail brackets, etc.: 16 gauge steel track section or steel plate 3/16" thick, of proper size to accommodate fastenings.

G. "Z" furring members: Steel, 16 gauge minimum, of size and profile indicated.

H. Gypsum Board Installation: Install gypsum board in accordance with GA-201, GA-216, GA-600 and manufacturer's instructions, with self-tapping screws, except as otherwise noted.

I. Joint Treatment: All joints, including internal and external corners, shall be filled and taped and 3-coat finished. All fastener heads and metal trim shall be 3-coat finished.

J. Prime Coat: Thoroughly remove all dust with a large damp sponge. Roller or airless spray apply prime coat in accordance with prime coat manufacturer's published application recommendations for full and complete coverage.

K. Skim Coat: A thin coat of joint compound, or a material manufactured especially for this purpose, applied over the entire surface to fill imperfections in the joint work, smooth the paper texture, and provide a uniform surface. Excess compound is immediately sheared off, leaving a film of skim coating compound completely covering the paper.

L. Finish: Gypsum board shown to be painted shall be Level 5, as defined by GA-214-96, "Recommended levels of Gypsum Board Finish" at walls and ceiling, or as appropriate to match existing adjacent finish.

M. Repair of damaged gypsum board at fire rated wall assemblies: Small holes up to 1” may be filled full depth with USG Firecode Compound. Larger holes or damage shall be repaired in accordance with Gypsum Association GA-225.

END OF SECTION

SECTION 09 00 11

GYPSUM BOARD SHAFT WALL ASSEMBLIES

PART 1 - GENERAL

1.1 SUMMARY

A. Section Includes:
   1. Gypsum board shaft wall assemblies.
   2. Supplementary components and accessories normally furnished or necessary for a complete installation, whether or not such items are indicated on the Drawings or included in the Specifications.

1.2 REFERENCES

A. Abbreviations and Acronyms:
   1. BMT: Base Metal Thickness.msg
   2. MSG: Manufacturer's Standard Gage for Sheet Steel.
   3. HDG: Hot Dip Galvanized.

B. Definitions:
   1. Manufacturer: Means the shaft wall assembly manufacturer, unless otherwise indicated.

1.3 ADMINISTRATIVE REQUIREMENTS

A. System Description:
   1. Description: Non-loadbearing gypsum wall partition assemblies consisting of steel framing members, gypsum liner panels friction-fit into shaft wall assemblies, and gypsum board panels applied to faces.
   2. Application: Installed vertically to enclose stairwell enclosures, elevator shafts, and other shafts; installed horizontally to enclose fire-resistive duct enclosures; and and installed elsewhere as indicated.

B. Performance Requirements:
   1. Interior Partition Uniformly Distributed Lateral Live Load: At least 5 pounds per square foot.
   2. Design Loads: Shaft wall assemblies must also accommodate, resist, distribute, or transfer, as applicable, other loads to which they are subjected, including attachment of any architectural components, non-structural components, equipment, and similar items.
   3. Superstructure Displacement:
      a. Vertical Displacement of Adjacent Stories (Live Load Deflection): Allow for at least 1/2 inch vertical live load structure deflection, unless otherwise indicated on the structural drawings and general notes.

1.4 SUBMITTALS

A. Action Submittals: Submit the following for responsive action (formal review and approval).
   1. Product Data: Submit manufacturer's product data, specifications, and all other information necessary to show conformance to the Contract Documents, excluding material safety data sheets (MSDSs), which are returned to the Contractor without review or responsive action.

B. Informational Submittals: Submit the following for information (informal review: responsive action not expected or required, except to record non-conformance with submittal requirements).
   1. Manufacturer's Instructions: Submit manufacturer-prepared published instructions for proper installation of furnished shaft wall assemblies.
      a. If manufacturer's instructions are unavailable or do not apply to specific project conditions, then consult the manufacturer's representative and obtain project-specific supplemental instructions printed on manufacturer's letterhead.
      b. Promptly distribute supplemental instructions to the Architect, who may have comments that lead to contract modifications or minor changes in the work.

1.5 QUALITY ASSURANCE

A. Source Limitations:
   1. Shaft wall assemblies must be obtained through one source from the same manufacturer (to ensure compatibility, regulatory conformance, and a warrantable installation).
      a. Certain items may be obtained from more than one manufacturer, but only when used for separate installations.
   b. Items provided for each different installation must be obtained from the same source and manufacturer.
   2. Gypsum panel products must be manufactured in North America by a domestic company from gypsum mined in North America; synthetic gypsum recovered from coal-fired plants operating in North America (FGD gypsum); or a combination of both.
   3. Provide secondary materials, components, accessories and other items from sources required, recommended, or accepted by the primary manufacturer for actual in- service conditions applicable to the project.

B. Quality Standards:
   1. Comply with all requirements of the California Building Code (CBC).
   2. Comply with ASTM C 754 requirements for installation of lightgage metal framing, except conform to the framing sizes and spacing indicated.
   3. Comply with the requirements of ASTM C 840 that apply to framing installation

C. Qualifications:
   1. Installer: Company or individuals must have at least 5 years' experience installing shaft wall assemblies for at least 30 previous projects similar to this project in size, material, design, and complexity.

1.6 HANDLING

A. Receiving: Inspect all deliveries for deteriorated, damaged, and defective items.
   1. Reject items that are not packaged in a manner that prevents damage; or that exhibit deterioration or damage or have damaged or open packaging or containers.
   2. Reject items that are not transported, delivered, or protected in conformance with manufacturer-recommended transport, delivery, and receiving requirements.
   3. Unload and store only inspected and accepted items.

B. Storage: Store unloaded items indoors as shipped, upright in their original packaging or containers, within dry, well-ventilated, broom-cleaned and enclosed storage areas.
   1. Furnish adequate dunnage and bracing during storage.
      2. Prevent stored items from contacting the floor, from soiling and staining, and from deterioration and damage.
      3. Do not leave items uncovered where they might be exposed to weather or become wet; or exposed to heat or sudden changes in temperature or relative humidity; or other sources of deterioration and damage, including dust and other airborne contaminants.

   C. Handling: Handle items in conformance with manufacturer's instructions and other requirements and recommendations, and in a manner that that prevents damage. Avoid damage to packaging and containers.

   D. Damaged Item Replacement: Promptly remove and replace deteriorated, damaged, or defective shaft wall materials with undamaged new shaft wall materials that do not exhibit deterioration, damage, or defects.

   E. Packaging Waste Management: Do not burn or bury construction waste at the project site. Remove and legally dispose of all construction waste away from the project site.

PART 2 - PRODUCTS

2.1 MANUFACTURERS

A. Manufacturers: Provide products manufactured by one of the following, or equal.
   1. CertainTeed Corp.
   2. GP Building Products.
   3. National Gypsum Co.
   4. USG Corp.

2.2 STEEL FRAMING

A. Materials: HDG Metallic-coated steel sheet for lightgage framing conforming to ASTM A 645, and manufactured from HDG metallic-coated steel sheet conforming to ASTM A 1003, NS33 (Non-Structural Grade 33), with at least a G40 coating weight designation (mass designation) on both surfaces with equal coating weight on each surface. Gage-equivalent drywall framing (G40e, G40EQ, and similar equivalent protective coatings) is prohibited.

B. Studs:
   1. Description: Manufacturer's standard pre-punched CH-, CT-, and I-shaped framing.
   2. Requisite Properties:
      a. Depth: Indicated on the Drawings.
      b. Thickness: At least 30 mils (20-gage).
      c. Flanges: At least 1-1/2-inch wide unstiffened flanges.

C. Jamb Studs:
   1. Description: Manufacturer's standard pre-punched J-shaped framing.
   2. Requisite Properties:
      a. Depth: Indicated on the Drawings.
      b. Thickness: At least 30 mils (20-gage).
      c. Flanges: At least 3-inch wide unstiffened flanges.

D. Runner Track:
   1. Description: Manufacturer's standard un-punched U-shaped framing.
   2. Requisite Properties:
      a. Depth: Indicated on the Drawings.
      b. Thickness: At least 30 mils (20-gage).
      c. Flanges: At least 2-inch wide unstiffened flanges.

E. Deflection Track:
   1. Description: Slotted roll- or brake-formed track installed in head-of-wall deflection conditions to accommodate vertical movement caused by normal head-of-wall and floor extension or compression.
   2. Product: Provide one of the following, or equal.
      a. "MaxTrack" slotted deflection track or "BlazeFrame" fire stop deflection track manufactured by ClarkDietrich Building Systems.
      b. "CEMCO Slotted Track (CST)" manufactured by CEMCO.

2.3 WALL PANELS

A. Gypsum Liner Panels:
   1. Description: Mold- and moisture-resistant gypsum-based panels conforming to ASTM C 1396, enclosed in a moisture- and mold-resistant glass mat on both sides.
   2. Products: Provide "SHEETROCK Glass-Mat Liner Panels" manufactured by USG Corp., or equal.
   3. Requisite Properties:
      a. Size: Provide at least 2-foot by 8-foot sheets.
      b. Thickness: One inch.
      c. Edges: Double beveled.
      d. Facers: Heat-cured, acrylic-coated, fiberglass mat on the face side, back side, and around long edges. Water repellent face and backing papers are prohibited.

B. Tile Backing Board and Installation Materials: Specified in Section 09 28 15.

C. Gypsum Board Panels and Installation Materials: Specified in Section 09 29 00.

2.4 ACCESSORIES

A. Sill Liner Gaskets:

1. Description: Self-adhering closed cell polyethylene foam air and moisture barrier.
2. Applications: Install between floor deck and interior wall runner track or sill plates at shafts, hoistways, and other locations where necessary or indicated.
3. Products: Provide 1/4-inch thick “Protecto Energy Plate Liner”, or equal.

B. Shims: Load bearing, non-leaching, high-density multimonomer plastic.

C. Screw Fasteners: Provide #6-32 UNC 2B (0.138-inch shank diameter, 32 threads per inch) manufactured by at least one-inch long, pan head, coarse thread, self-drilling uncoated bi-metal screw fasteners specified in Section 05 05 23, unless another fastener type is explicitly indicated; or supplied, required, recommended, or accepted by the manufacturer for actual in-service conditions applicable to the project.

D. Power-Actuated Fasteners: Specified in Section 05 05 23.

E. Other Accessories: Provide other accessories and secondary items normally furnished or necessary for a complete installation; or supplied, required, recommended, or accepted by the manufacturer for actual in-service conditions applicable to the project.

PART 3 - EXECUTION

3.1 EXAMINATION

A. Oversight: Ensure an adequate number of supervisors are present and proper supervision practices are followed at the project site before the installer begins work and at all times during installation.

B. Verification: Verify in-place supporting and adjacent construction conforms to the manufacturer’s requirements or recommendations and satisfies all other conditions that might affect the quality of installation or the durability, appearance, or performance of installed and adjacent items.

C. Evaluation and Assessment:

1. Identify project conditions that do not conform to the manufacturer’s instructions and other requirements and recommendations.
2. Perform or arrange and pay costs for all remedial work necessary to correct or improve deficient conditions, without limitation, before the installer begins work.

3.2 INSTALLATION

A. General Requirements:

1. Install shaft wall assemblies using materials and methods required, recommended, or accepted by the manufacturer, along with manufacturer-recommended accessories and techniques.
2. Installed shaft wall assemblies must be warrantable. Do not install, correct, or replace shaft wall assemblies in a manner that results in any warranty or guarantee becoming void.

B. Special Techniques:

1. Do not bridge architectural or building expansion joints with shaft wall assemblies; frame both sides of expansion joints separately.
2. At penetrations in shaft wall, maintain fire-resistance rating of shaft-wall assembly by installing supplementary shaft wall assemblies around perimeter of penetration and fire protection behind boxes containing wiring devices, elevator call buttons, elevator floor indicators, and similar items.
3. Isolate perimeter of gypsum panels from building structure to prevent cracking of panels, while maintaining continuity of fire-rated construction.
4. Install control joints in conformance with ASTM C 840 and in specific locations approved by Architect, while maintaining fire-resistance rating of gypsum board shaft wall assemblies.
5. Seal gypsum board with acoustical sealant at perimeter of each assembly where it abuts other work and at joints and penetrations within each assembly. Install acoustical sealant to withstand dislocation by air-pressure differential between shaft and external spaces; maintain an airtight and smoke-tight seal; and comply with ASTM C 919 requirements or with manufacturer's written instructions, whichever are more stringent.
6. At elevator shafts where shaft wall assemblies cannot be positioned within 4 inches of the shaft face of structural beams, floor edges, and similar projections into shaft, provide 1/2- or 5/8-inch- thick gypsum board cants covering tops of projections. No recesses allowed (at steel beams especially).
   a. Slope cant panels at least 75 degrees from horizontal. Set base edge of panels in adhesive and secure top edges to shaft walls at 24 inches O.C. with screws fastened to shaft-wall shaft wall assemblies.
   b. Where shaft wall assemblies is required to support gypsum board cants, install shaft wall assemblies at 24 inches on center and extend studs from the projection to shaft-wall shaft wall assemblies.

C. Interface with Adjacent Items: materials, components, and accessories normally furnished or necessary to securely attach shaft wall assemblies to supporting construction.

D. Installation Tolerances: Install shaft wall assemblies within the following tolerance variations.

1. Maximum out of Plumb: Not more than L/960 of span, or 1/8-inch in 10 feet.
2. Maximum out of Level: Not more than L/960 of span, or 1/8-inch in 10 feet,
3. Maximum out of Plane: Fastening surfaces of adjacent framing members may not vary by more than 1/8-inch.
4. Maximum Stud Spacing Variance: Not more than 1/8-inch. Cumulative error may not exceed minimum fastening requirements of sheathing or other finishing materials.

3.3 CORRECTION AND REPAIR

A. Non-conforming, damaged, and defective work must be brought into conformance with the Contract Documents. Correct and repair as necessary, without limitation, including arranging all correction and repair work and paying all correction and repair costs, until accepted in writing by the Architect.

B. Corrective and repair work must be performed in conformance with a correction and repair plan submitted to and accepted in writing by the Architect before correction or repair work begins. At a minimum, correction and repair plans must include

1. written descriptions of non-conforming, damaged, and defective work;
2. supporting sketches, diagrams, photographs, and other visual depictions of non-conforming, damaged, and defective work; and
3. similar written descriptions and visual depictions of Contractor-proposed corrections and repairs.

C. Arrange and pay costs for removing and replacing work that cannot be corrected or repaired to the Architect's acceptance.

3.4 CLEANING

A. Waste Management: After completing the work of this specification section, leave work areas free from debris, waste, scrap, equipment, tools, and other items.

3.5 PROTECTION

A. Protect installed shaft wall assemblies in place from deterioration and damage until Substantial Completion. Remove and replace wet, moisture-, or mold-damaged panels.
   1. Indications panels are wet or moisture damaged include discoloration, sagging, or irregular shape.
   2. Indications that panels are mold damaged include fuzzy or splotchy surface contamination and discoloration.

B. Do not store anything on, adjacent to, or against installed shaft wall assemblies unless they are protected from damage, as accepted in writing by the manufacturer's representative. Do not use installed shaft wall assemblies as work surfaces.

C. Remove protection when it's no longer needed and before Substantial Completion.

END OF SECTION

SECTION 09 00 20
INTERIOR GYPSUM PLASTER

A. Where shown on drawings or where patching of existing plastered walls is required, provide metal lath and plaster finish applied to wall framing. Lath shall be 3.4 lb. galvanized expanded metal. Provide 3-coat gypsum plaster finish to match existing, maximum 1:3 gypsum to sand ratio, in conformance with CBC chapter 25 and USG SYSTEM SA920 manufacturer's recommendations.

END OF SECTION

This Page Left Blank Intentionally

SECTION 09 00 30
CERAMIC TILE

A. Provide wall and floor tile and perform work in accordance with the Tile Council of America (TCA) Handbook for Ceramic Tile Installation, latest edition.

B. Wall tile shall be glazed ceramic tile; see separate color and materials supplement. Install per TCNA recommendations for tile over cementitious backer board in accordance with TCNA W244c. For installation of tile over existing mortar bed, install per TCNA W241.

C. Floor tile shall be 2" x 2" unglazed ceramic tile, see separate color and materials supplement. Install per TCNA recommendations for thinset tile over concrete subfloor in accordance with TCNA F122.

D. Shower Enclosure tile shall be 2" x 2" unglazed ceramic tile on the floor, wall tile to match balance of room. See separate color and materials supplement. Install per TCNA recommendations for tile over full mortar bed over concrete subfloor in accordance with TCNA B415 and B421. Where sidewall of shower extends beyond shower enclosure, extend the waterproof wall membrane minimum 24” beyond enclosure.

E. Provide cove, cap and angle trim shapes for all corners and edge conditions.

F. Threshold: one-piece white marble threshold, full depth and width of frame opening, beveled both sides, radiused edges. Installation in accordance with TCNA Handbook for Ceramic Tile Installation - Method TR611.

G. The installed dry surface static coefficient of friction for finish surface materials shall be not less than 0.60 for level walking surfaces when tested in accordance with procedures outlined in ASTM Test Method C-1028-89.

END OF SECTION

This Page Left Blank Intentionally

SECTION 09 00 40
PAINTING

A. Materials: All material shall be manufacturer's first quality and best grade and shall be delivered in original, unopened containers. Materials shall not be diluted by addition of thinners except as recommended by manufacturer's label instructions.

B. Examination and Preparation: Verify that substrate conditions are ready to receive work.

Correct minor defects and clean surfaces that affect work of this Section. Protect adjacent surfaces against damage and stains.

Gypsum Board Surfaces: Fill minor defects with latex compounds. Spot prime defects after repair. The first coat shall be roller applied and include such repeated touching up of suction spots of overall application of sealer as necessary to produce a uniform color and gloss.

Galvanized Surfaces: Remove surface contamination and oils and wash with solvent. Apply coat of etching primer.

Exposed metal work, both interior and exterior, including unplated plumbing, piping, and trim, shall be thoroughly cleaned before application of paint. Remove rust, scale, grease and pickling solution. Wash with solvent if necessary.

Shop Primed Steel Surfaces: Sand and scrape to remove loose primer and rust, clean surfaces with solvent. Prime bare steel surfaces.

Demolition: Where existing partitions, walls, floors, ceiling, roof or floor construction, curbs, fixtures, outlets, ducts, piping, conduit, trim and other such items are shown to be removed, existing remaining construction and new patch and repair work thereto, shall be painted to match existing and/or new adjacent construction and finish.

Existing Painted Surfaces: Sand or scrape to remove any loose or peeling paint. Repair defects and sand surfaces smooth. Lightly sand existing glossy surfaces.

C. Application: Apply products in accordance with manufacturer's instructions.

All edges of paint adjoining other materials or colors shall be sharp, straight, and clean, and without overlapping.

Exposed ducts, piping, conduits, ferrous or galvanized metal work, factory primed equipment, and other such features for which a paint process is not specifically designated, are to be finished to match adjacent painted walls or ceilings if the area or space in which they occur is scheduled to be painted.

All closets, alcoves, recesses and other such accessory spaces shall be finished the same as adjoining rooms, unless shown otherwise on the drawings.

Remove unfinished louvers, grilles, covers, and access panels and paint separately. Paint dampers and ducts visible behind louvers and grilles flat black.

D. Schedule - Exterior Paint Processes

Note: All paint processes below are Dunn Edwards products to establish level of quality.

Metal-Galvanized:

Process S. (semi-gloss):

Pre-treat	SC-ME01-1 Krud-Cutter
1 coat primer	UGPR00 Ultra-Grip
2 coats semi-gloss	ASHL50 Aristoshield

Metal-Ferrous:

Process S (semi-gloss):

1 coat primer	ENPR00 Enduraprime
2 coats semi-gloss	ASHL50 Aristoshield

Note: Where required, stripe coat all welds, joints, and outside edges prior to applying full prime coat of Enduraprime.

Aluminum::

Process S (semi-gloss):

1 coat primer	UGPR00 Ultra-Grip
2 coats semi-gloss	ASHL50 Aristoshield

E. Schedule - Interior Paint Processes

Note: All paint processes below are Dunn Edwards products to establish level of quality.

Gypsum Board:

Process E (eggshell)

1 coat sealer	VNPL 00 Vinylastic Plus
2 coats eggshell	SPMA30, Suprema

Process S (semi-gloss)

1 coat sealer	VNPL 00 Vinylastic Plus
2 coats semi-gloss	SPMA50, Suprema (1st coat roller applied)

Previously Painted Surfaces:

Process E (eggshell)

1 coat primer	BIPR00-1 Block-It Premium
2 coats eggshell	SPMA30, Suprema

Process S (semi-gloss)

1 coat sealer	BIPR00-1 Block-It Premium
2 coats semi-gloss	SPMA50, Suprema (1st coat roller applied)

Existing Interior Concrete:

Process E (eggshell)

1 coat primer	UGPR00 Ultra-Grip
2 coats eggshell	SPMA30, Suprema

Process S (semi-gloss)

1 coat sealer	UGPR00 Ultra-Grip
2 coats semi-gloss	SPMA50, Suprema (1st coat roller applied)

Wood:

Process WN (wood-natural)

1 coat stain	Old Masters Wiping Stain
1 coat sealer	Old Masters Waterborne Polyurethane
2 coats clear finish	Old Masters Waterborne Polyurethane

Process S (semi-gloss):

1 coat primer	UGPR00 Ultra-Grip
2 coats semi-gloss	SPMA50, Suprema (1st coat roller applied)

Hollow Metal Doors and Frames::

Process S. (semi-gloss):

1 coat primer	ENPR00, Enduraprime
2 coats semi-gloss	ENPX50, Enduracat

Metal-Galvanized:

Process S. (semi-gloss):

Pre-treat	SC-ME01-1 Krud-Cutter
1 coat primer	UGPR00 Ultra-Grip
2 coats semi-gloss	SPMA50, Suprema

Metal-Ferrous:

Process S (semi-gloss):

1 coat primer	ENPR00 Enduraprime
2 coats semi-gloss	SPMA50, Suprema

END OF SECTION

SECTION 09 51 13
ACOUSTICAL CEILINGS

PART 1 GENERAL

1.01 SECTION INCLUDES

A. Suspended metal grid ceiling systems.

B. Acoustical tiles.

C. Seismic restraints.

D. Perimeter trim, penetration trim and suspension.

1.02 SYSTEM DESCRIPTION

A. Install system capable of supporting imposed loads to a deflection of 1/360 of span maximum.

B. Conform to the applicable portions of the applicable governing building codes itemized in Section 01 41 13 - Summary of Applicable Codes.

C. Conform to applicable portions of the California Building Code for fire rated assembly and combustibility requirements for materials.

1.03 SUBMITTALS

A. Submit as specified in Section 01 33 01 - Submittals.

B. Product Data: Provide data on metal grid system components and acoustical units.

C. Samples: Submit two samples, 12 X 12 inch in size, illustrating material and finish of each type of acoustical unit.

D. Samples: Upon request by the Engineer, submit two samples, each 12 inches long, of metal suspension system main runner, cross runner, and edge trim.

E. Samples: Upon request by the Engineer, submit two 24 inch long drapery pocket samples, including joint and end closure.

F. Manufacturer's Installation Instructions: Indicate special procedures, perimeter conditions requiring special attention.

1.04 QUALIFICATIONS

A. Manufacturer: Company specializing in the manufacture or products specified in this Section with minimum five year documented experience.

B. Applicator: Company specializing in performing the work of the Section with minimum five years documented experience and approved by manufacturer. A California Contractor's State License Board Class C-2 license is required.

1.05 ENVIRONMENTAL REQUIREMENTS

A. Maintain uniform temperature of minimum 60 degrees F, and maximum humidity of 40 percent prior to, during, and after acoustical unit installation.

1.06 SEQUENCING

A. Sequence work to ensure acoustical ceilings are not installed until building is enclosed, sufficient heat is provided, dust generating activities have terminated, and overhead work is completed, tested, and approved. Install acoustical units after all interior wet work is dry.

PART 2 PRODUCTS

2.01 SUSPENSION SYSTEM

A. Scope of suspension system work is limited to replacement of existing grid members that are damaged.

B. Manufacturer: USG Donn DX/DXL or Armstrong Prelude XL.

C. Grid: ASTM C635, heavy duty assembly, 15/16” wide face; components die cut and interlocking.

D. Accessories: Seismic clips, stabilizer bars, clips, edge moldings, and hold down clips required for suspended grid system.

E. Grid Materials: Commercial quality cold rolled steel, with galvanized coating.

F. Grid Finish: Color to be flat white.

G. Support Channels and Hangers: Galvanized steel, size and type to suit application.

H. Touch-up Paint: Type and color to match grid units.

2.02 ACOUSTICAL UNITS

A. AT-1: USG "Mars Healthcare High-NRC / High CAC” Acoustical Tile #86343, 2’x2’x1", SLT tapered tegular edge, color flat white, 80 NRC 40 CAC.

B. AT-2: USG “Sheetrock Gypsum Ceiling Panels” #3270, 2’x2’x1/2”, square edge, color flat white, 40 CAC, weight = 2.0 psf.

PART 3 EXECUTION

3.01 EXAMINATION

A. Verify that conditions are ready to receive work.

B. Verify that layout of hangers will not interfere with other work.

C. Beginning of installation signifies acceptance of existing conditions.

3.02 INSTALLATION - SUSPENSION SYSTEM REPAIR

A. Install repair components in system in accordance with ASTM C636, ASTM E580, manufacturer's instructions, and the 2019 California Building Code. Install system after all major above ceiling work is complete.

B. Seismic Bracing: Laterally brace suspension systems as shown on drawings and as required by the designated building code.

C. Do not support ceiling fixtures or outlets on main runners or cross runners if weight causes total dead load to exceed deflection capability. Support loads by supplementary hangers located within 3 inches of each corner; or support components independently, as specified in the designated building code.

D. Do not eccentrically load system, or produce rotation of runners.

E. Coordinate the location of hangers with other work. Where components prevent the regular spacing of hangers, reinforce the system to span the extra distance.

F. Hang system independent of walls, columns, ducts, pipes and conduit. Where carrying members are spliced, avoid visible displacement of face plane of adjacent members.

G. Install edge molding at intersection of ceiling and vertical surfaces, using longest practical lengths. Miter corners. Provide edge moldings and suspension system at junctions with other interruptions and penetrations.

H. Where round obstructions or penetrations occur, provide preformed collars to match edge molding, Fry Reglet Corporation "Column Collar", or equal approved by Engineer prior to installation.

3.03 INSTALLATION - ACOUSTICAL UNITS

A. Install acoustical units level, in a uniform plane, free from damage, twist, warp or dents.

B. Scribe and cut panels at borders and penetrations to provide a neat, precise fit. For tegular edge units, kerf cut edge to match factory edge and paint cut edge to match factory white color.

3.04 TOLERANCES

A. Variation from Flat and Level Surface: 1/8 inch in 10 feet.

B. All exposed-to-view surfaces shall be flush and level. Upon completion, the ceiling shall present a true, level, and even surface with all joints in alignment.

C. Following installation, dirty or discolored surfaces of acoustical units shall be cleaned and left free from defects. Units that are damaged or improperly installed shall be removed and new units provided as directed.

END OF SECTION

SECTION 09 65 16
RESILIENT FLOORING

PART 1 GENERAL

1.01 SECTION INCLUDES:

A. Resilient sheet flooring.

B. Resilient base, cove base.

1.02 SUBMITTALS

A. Submit as specified in Section 01 33 01 - Submittals.

B. Product Data: Provide data on specified products, describing physical and performance characteristics; sizes, patterns and colors available.

C. Submit two sets of samples, 3 x 3 inches minimum in size, illustrating color and pattern for each floor material specified or indicated.

D. Submit two sets of 2 inch long samples of base material illustrating color and pattern for each base material specified or indicated.

E. Manufacturer's Installation Instructions: Indicate special procedures, perimeter conditions requiring special attention, and recommendations for preparation of substrate.

F. Manufacturer's Certificate: Certify that Products meet or exceed specified requirements.

G. Submit manufacturers published slip resistance and coefficient of friction test results conducted by an independent testing laboratory.

1.03 REGULATORY REQUIREMENTS

A. Conform to the applicable portions of the 2019 California Building Code.

B. Conform to applicable portions of the designated applicable code for flame/smoke rating requirements in accordance with ASTM E84.

C. Conform to applicable requirements of the Americans with Disabilities Act (ADA), Accessibility Guidelines for Buildings and Facilities (and Appendix) for slip resistance and static coefficient of friction for walking surfaces.

1.04 SLIP RESISTANCE

A. The installed dry surface static coefficient of friction for finish surface materials shall be not less than 0.60 for level walking surfaces when tested in accordance with procedures outlined in ASTM Test Method D-2047-82.

1.05 QUALIFICATIONS

A. Manufacturer: Company specializing in the manufacture of products specified in this section with minimum five years documented experience.

B. Installer: Company specializing in performing the work of this section with minimum five years documented experience and approved by material manufacturer. A California Contractor's State License Board Class C-15 license is required.

1.06 DELIVERY, STORAGE, AND HANDLING

A. Deliver, store, protect and handle products at site as specified in Section 01 65 01.

B. Protect roll materials from damage by storing on end.

1.07 ENVIRONMENTAL REQUIREMENTS

A. Store materials for three days prior to installation in area of installation to achieve temperature stability.

B. Maintain ambient temperature required by resilient material and adhesive manufacturer three days prior to, during, and 24 hours after installation of materials.

1.08 MAINTENANCE DATA

A. Submit as specified in Section 01 78 23.

B. Maintenance Data: Include maintenance procedures, recommended maintenance materials, and suggested schedule for cleaning, stripping, and re-waxing.

1.09 WARRANTY

A. The Contractor shall warrant resilient flooring against defects in material and workmanship for a period of one year after the date of acceptance of the building by the Agency.

1.10 MOCK-UP

A. Provide mock-up of each type of resilient flooring system specified with accessories.

B. Construct mock-up, approximately 120 square feet for each type, illustrating joint treatment and surface finish and accessories installation. Mock-up will establish a minimum standard of quality for this work.

C. Locate where directed by the Engineer.

D. Mock-up, if approved, may remain as part of the work.

PART 2 PRODUCTS

2.01 SUBSTITUTIONS

A. As specified in Section 01 25 01.

2.02 MATERIALS - FLOORING

A. See separate color and materials supplement for resilient sheet flooring and tile.

2.02 MATERIALS - BASE

A. Manufacturer: Armstrong, Burke, or equal; 6" high or match existing base height. Standard color; see separate color and materials supplement.

B. Provide premolded external corner and end units for resilient base. Color, height and profile to match specified base material.

PART 3 EXECUTION

3.01 EXAMINATION

A. Verify that surfaces are smooth and flat with maximum variation of 1/8 inch in 10 feet, and are ready to receive work.

B. Verify floor and lower wall surfaces are free of substances that may impair adhesion of adhesive and finish materials.

C. Verify concrete floors are dry to a maximum moisture content of 7 percent, and exhibit negative alkalinity, carbonization, or dusting.

D. Beginning of installation signifies acceptance of existing substrate and site conditions.

3.02 PREPARATION

A. Resilient flooring work shall not be started until windows and openings are satisfactorily closed. All wet work, such as plaster, ceramic tile, and other such work, shall be previously installed, inspected and approved and dry.

B. At all areas to receive resilient flooring, remove existing floor finish and base. Remove any existing adhesive that is incompatible with the new adhesives or flooring.

C. Floor surfaces that are to receive flooring shall be clean, thoroughly dry, smooth, firm, and sound, and free from springiness, oil, dirt, curing compounds, or any other damaging material. Floor surfaces shall be swept, vacuumed, and damp-mopped when necessary, to remove dust and soil, and shall be scrubbed with a strong detergent solution, thoroughly rinsed, and spot-primed when necessary to remove oil or grease stains.

D. Remove sub-floor ridges and bumps. Fill minor or local low spots, cracks, joints, holes, and other defects with sub-floor filler to achieve smooth, flat, hard surface.

E. Prohibit traffic until filler is cured.

F. Vacuum clean substrate.

3.03 INSTALLATION - GENERAL

A. Fit flooring neatly into breaks and recesses against walls, around pipes, under saddles or threshold, and around permanent cabinets and fixtures.

B. Extend flooring and base into toe spaces, closets, alcoves, storage rooms, and similar recesses and under and behind equipment and fixtures, unless shown otherwise.

C. Install flooring on covers occurring within finish floor areas. Maintain overall continuity of color and pattern with pieces of flooring installed on covers.

D. Do not install sheet flooring over expansion joints.

3.04 INSTALLATION - SHEET FLOORING

A. Install in accordance with manufacturer's published instructions.

B. Spread only enough adhesive to permit installation of materials before initial set.

C. Set flooring in place, press with 100 pound roller to attain full adhesion.

D. Lay flooring with joints and seams parallel to building lines to produce minimum number of seams.

E. Install sheet flooring parallel to width of room. Provide minimum of 1/3 full roll width. Double cut sheet; provide continuously heat welded seal.

F. Terminate flooring at centerline of door openings where adjacent floor finish is dissimilar.

G. Install edge strips at unprotected or exposed edges, and where flooring terminates. Secure metal strips after installation of flooring with stainless steel screws.

H. Turn flooring up to form base where cove base is shown or specified. Back floor and wall junction with cove stick, 7/8" minimum radius. Provide cap strip to terminate base.

I. Scribe flooring to walls, columns, cabinets, floor outlets, and other appurtenances to produce tight joints.

J. Install flooring in pan type floor access covers. Maintain floor pattern.

3.04 INSTALLATION – RESILIENT TILE

A. Install in accordance with manufacturer's published instructions for fully-adhered installation.

B. Spread only enough adhesive to permit installation of materials before initial set.

C. Set flooring in place, press with 100 pound roller to attain full adhesion.

D. Lay flooring with edges parallel to building lines to produce minimum number of seams.

E. Layout flooring so that all flooring can be installed while staying off of freshly installed tiles. Sequence work zones with widths not wider than installers' reach.

F. Install plank-style flooring with staggered ends, minimum 6" offsets from adjacent strips.

G. Scribe tile to walls, columns, cabinets, floor outlets, and other appurtenances to produce tight joints.

H. Install flooring in pan type floor access covers. Maintain floor pattern.

3.06 INSTALLATION - BASE

A. Install base on all walls as indicated and on fronts, toe spaces and finished backs and ends of cabinets. Scribe base accurately to abutting materials.

B. All cracks and voids in wall shall be filled with approved crack filler. Irregular surfaces shall be brought to a smooth finish with a satisfactory smoothing compound.

C. Fit joints tight and vertical. Maintain minimum measurement of 24 inches between joints.

D. Miter internal corners. At external corners, use premolded units. At exposed ends, use premolded units.

E. Install base on solid backing. Bond tight to wall and floor surfaces.

F. Scribe and fit to door frames and other interruptions.

3.07 CLEANING

A. Clean work as specified in Section 01 74 10 - Cleaning.

B. Remove excess adhesive from floor, base, and wall surfaces without damage.

C. Clean, seal, and wax floor and base surfaces in accordance with manufacturer's instructions.

3.08 PROTECTION OF FINISHED WORK

A. Protect finished work as specified in Ventura County Standard Specifications, Part 1 - General Provisions.

B. Prohibit traffic on floor finish for 48 hours after installation.

END OF SECTION

SECTION 09 68 13

TILE CARPETING

PART 1 - GENERAL

1.1 SUMMARY

A. Section Includes:
1. Modular carpet tile.
2. Surface preparation.
3. Installation materials.
4. Supplementary components and accessories normally furnished or necessary for a complete installation, whether or not such items are indicated on the Drawings or included in the Specifications.

B. Related Requirements:
1. Section 03 35 10 for concrete flatwork finishing and curing; and for preventative MVER products.
2. Section 09 05 16 for preparation of concrete slabs for finish carpet; and for remedial MVER products.

1.2 REFERENCES

A. Abbreviations and Acronyms:
1. CRI: The Carpet and Rug Institute, Inc.
2. ICRI: International Concrete Repair Institute, Inc.
3. MVER: Moisture Vapor Emission Rate.

B. Definitions:
1. Manufacturer: Means the carpet manufacturer, unless otherwise indicated.

1.3 ADMINISTRATIVE REQUIREMENTS

A. Coordination: Verify chemical and adhesive compatibility of selected carpet adhesives with installed curing compounds and installed moisture vapor emission control systems, based on current product formulations.

B. Preinstallation Meeting:
1. Carpet manufacturer's representative and installer must attend the preinstallation meeting specified in specification section 03 35 10.
2. Schedule a separate additional preinstallation meeting between the Contractor, the Architect, carpet manufacturer's representatives and installers, and the entities and individuals responsible for conducting concrete substrate testing.
3. Hold the meeting after submittal approval and at least 10 business days before beginning installation.
4. During the meeting, review the Contract Documents, submittals, project conditions, and installation sequence and methods, including special details and conditions that might

affect installation.

5. Identify and discuss adverse or unfavorable conditions detrimental to protecting stored materials or to installation; or to the quality, durability, appearance, or performance of installed carpet. Resolve each condition.
6. Finalize construction schedule.
7. Record significant discussions and distribute meeting minutes. Do not begin installation until disagreements are successfully resolved to the satisfaction of all parties.

C. Sequencing:

1. Schedule carpet deliveries to the project site only after the building is enclosed with a permanent enclosure; “wet work” within storage areas (including concrete, cast underlayment, mortaring, grouting, plastering, and gypsum board finishing) is complete and cured or dried to a condition of equilibrium; storage areas are broom- and vacuum-clean; and the HVAC system is activated, operating, and maintaining ambient conditions at occupancy levels.
2. Install carpet only after concrete is cured to a condition of equilibrium; is sufficiently dry to bond with carpet adhesives; and has alkalinity (pH), MVER, and RH within ranges required, recommended, or accepted by the manufacturer. Provide chemically and adhesively compatible treatment when required or necessary to reduce pH and MVER to within allowable limits required, recommended, or accepted by the manufacturer.
3. Substrate repairs must be completed after surface preparation.
4. Before beginning installation, final light fixtures must be completely installed, energized, and fully illuminated to at least the same type and level of illumination, and color temperature, maintained in the room or space after the building is occupied.
5. Install carpet only after penetrating items are installed.
6. Install carpet only after all other finishing operations are complete, especially overhead finishes.
7. After carpet installation, maintain ambient conditions within a range required, recommended, approved, or accepted by the manufacturer until Final Completion.

D. Scheduling:

1. Concrete Curing: Allow enough time in the construction schedule for concrete to cure for at least 28 days before beginning surface preparation and installation.
2. Acclimation: Allow sufficient time in the construction schedule to acclimate carpet and installation materials to specified ambient conditions for at least 48 hours before installation begins.
3. Primer Installation: Carpet must be applied within 24 hours of primer installation. Re-prime surfaces exposed for more than 24 hours; follow manufacturer’s instructions for re-priming.
4. Access Restrictions: Close spaces during installation; keep closed to foot traffic after installation for at least 48 hours and to rolling traffic for at least 72 hours.

1.4 SUBMITTALS

A. Action Submittals: Submit the following for responsive action (formal review and approval).

1. Product Data: Submit manufacturer’s product data, specifications, typical installation details, and all other information necessary to show conformance to the Contract

Documents, excluding material safety data sheets (MSDSs), which are returned to the Contractor without review or responsive action.

2. Shop Drawings:
   a. Submit dimensioned plans drawn to scale and showing carpet and seam layouts.
   b. Include project-specific dimensioned details drawn to scale showing conditions not detailed on the product data; or that are detailed, but not in a manner specific to the project. Cross-reference details to plans.
3. Samples: Submit at least 8-inch square representative samples of each carpet color, finish, and variety.

B. Informational Submittals: Submit the following for information (informal review: responsive action not expected or required, except to record non-conformance with submittal requirements).
   1. Manufacturer's Instructions: Submit manufacturer-prepared published instructions for proper installation of furnished carpet.
      a. If manufacturer's instructions are unavailable or do not apply to specific project conditions, then consult the manufacturer's representative and obtain project-specific supplemental instructions printed on manufacturer's letterhead.
      b. Promptly distribute supplemental instructions to the Architect, who may have comments that lead to contract modifications or minor changes in the work.
   2. Qualification Statements: Submit written descriptions confirming experience specified in QUALITY ASSURANCE article below.

C. Maintenance Material Submittals:
   1. Before Final Completion, deliver to the Owner floor cleaning materials, equipment, accessories, and instructions; and extra stock materials to replace those worn or damaged as a result of normal occupancy.
   2. Furnish at least 2 percent of the total installed for each carpet type, color, composition, grade, finish, and variety, but not less than one unopened box or container.

1.5 QUALITY ASSURANCE

A. Source Limitations:
   1. Carpet must be obtained through one source from the same manufacturer (to ensure compatibility, regulatory conformance, and a warrantable installation).
      a. Certain items may be obtained from more than one manufacturer, but only when used for separate installations.
      b. Items provided for each different installation must be obtained from the same source and manufacturer.
   2. Provide secondary materials, components, accessories and other items from sources required, recommended, or accepted by the primary manufacturer for actual in- service conditions applicable to the project.

A. Regulatory Requirements:
   1. Radiant Flux Classification: Provide carpet having an average critical radiant flux value of at least 0.45 (Class I), when tested in conformance with ASTM E 648.
   2. Carpeting must conform to the requirements of California Building Code Section 11B-302.2
   3. Carpet must be securely attached and must have a firm cushion, pad, or backing or

no cushion or pad. It must have a level loop, textured loop, level cut pile, or level cut/uncut pile texture. Pile height must be 1/2-inch maximum.

4. Exposed edges must be fastened to floor surfaces and must have trim on the entire length. Carpet edges must conform to the requirements of California Building Code Section 11B-303.

B. Quality Standards:

1. Installation Standard: Comply with The Carpet and Rug Institute publication CRI 104, "*Standard for Installation of Commercial Carpet*" requirements that apply to each in-service condition indicated.
2. Installation Standard: Install carpet in conformance with The Carpet and Rug Institute publication CRI 105, "*Standard for Installation of Residential Carpet*" requirements that apply to each in-service condition indicated.

C. Qualifications:

1. Installer: Company or individuals must have at least 5 years' experience installing carpet for at least 30 previous projects similar to this project in size, material, design, and complexity.
2. Supervisors: Individuals must have at least 7 years' experience installing carpet for at least 30 previous projects similar to this project in size, material, design, and complexity, including at least 2 years' supervisory experience directing and leading carpet installers.

1.6 HANDLING

A. Receiving: Inspect all deliveries for deteriorated, damaged, and defective items.

1. Reject items that are not packaged in a manner that prevents damage; or that exhibit deterioration or damage or have damaged or open packaging or containers.
2. Reject items that are not transported, delivered, or protected in conformance with manufacturer-recommended transport, delivery, and receiving requirements.
3. Unload and store only inspected and accepted items.

B. Storage: Store unloaded items indoors as shipped, upright in their original packaging or containers, within dry, well-ventilated, broom-cleaned and enclosed storage areas. Furnish adequate dunnage and bracing during storage.

1. Prevent stored items from contacting the floor, from soiling and staining, and from deterioration and damage.
2. Do not leave items uncovered where they might be exposed to weather or become wet; or exposed to heat or sudden changes in temperature or relative humidity; or other sources of deterioration and damage, including dust and other airborne contaminants.

C. Handling: Handle items in conformance with manufacturer's instructions and other requirements and recommendations, and in a manner that that prevents damage.

1. Avoid damage to packaging and containers, and contamination of contents.
2. Rotate inventory; do not use items the shelf life of which is expired.

D. Damaged Item Replacement: Promptly remove and replace deteriorated, damaged, or defective carpeting with undamaged new carpeting that do not exhibit deterioration, damage, or defects.

E. Packaging Waste Management: Do not burn or bury construction waste at the project site. Remove and legally dispose of all construction waste away from the project site.

1.7 PROJECT CONDITIONS

A. Ambient Conditions: Install carpet only when ambient temperature, RH, and other environmental conditions fall within ranges required, recommended, or accepted by the manufacturer.

B. Existing Conditions:
   1. Surface Conditions: Surfaces receiving carpet must be dry. Install carpet only when substrate moisture content, vapor emission rate, and surface temperature fall within ranges required, recommended, or accepted by the manufacturer..
   2. Ventilation: Maintain adequate ventilation during and after installation and curing, setting, or drying. Where natural ventilation is inadequate, use forced-air circulation or mechanical ventilation as necessary for the installations indicated.
   3. Illumination: Provide permanent lighting or illuminate work spaces to at least the same level occurring in the room or space after Final Completion.

PART 2 - PRODUCTS

2.1 MANUFACTURERS

A. Manufacturers: Provide products manufactured by one of the following, or equal.
   1. Bently Mills.
   2. Interface, Inc.
   3. Mannington Commercial.
   4. Millikin & Co.
   5. Mohawk Carpet, LLC.
   6. Shaw Contract.
   7. Tandus Centiva.

2.2 MODULAR CARPET TILE

A. Description: CRI Green Label Plus Certified modular carpet tile floor covering.

B. Products: See separate color and materials supplement.

2.3 SURFACE PREPARATION

A. Substrate Testing and Surface Preparation: Perform testing and corrective work, and prepare substrates in conformance with the requirements of Section 09 05 16.

B. Concrete Surface Profiling: Provide ICRI concrete surface profile CSP 1 to CSP 2 (between 0 and 3 mils), unless otherwise explicitly required, recommended, or accepted in writing by the covering manufacturer. Conformance to the requirements of Section 09 05 16.

2.4 INSTALLATION MATERIALS

A. Concrete Repair:
   1. Description: Trowel-grade cementitious products used to fill and repair portions of indoor and outdoor concrete flatwork.
   2. Product: Provide “ARDEX CP” manufactured by ARDEX Engineered Cements, or equal, unless another type is explicitly indicated or otherwise supplied, required, recommended, or accepted by the manufacturer

B. Trowelable Leveling and Patching Compounds: Specified in Section 03 54 16, or as otherwise supplied, required, recommended, or accepted by the manufacturer for the applications indicated.

C. Moisture Vapor Transmission Reduction Coating: Specified in Section 03 35 09 (preventative) or Section 09 05 16 (remedial), unless another coating is supplied,

   required, recommended, accepted by the by manufacturer for actual in-service conditions applicable to the project.

D. Primer and Adhesives: With assistance from selected manufacturer, provide water-based solvent-free primers and adhesives supplied, required, recommended, or accepted by the manufacturer for in-service installation conditions, including temperature, relative humidity, and substrate porosity; and expected foot traffic, wheeled traffic, and fire- resistance ratings.

2.5 ACCESSORIES

A. Metal Floor Trim:
   1. Floor Transitions:
      a. Description: Metal profiles designed to provide a smooth transition between tile coverings and flooring at lower elevations; or finished concrete.
      b. Product: Provide “Schluter-RENO-U” manufactured by Schluter Systems, or equal.
      c. Material: Stainless steel.
   2. Edge Strips:
      a. Description: L-shaped profile with 1/8-inch wide visible surface and integrated trapezoid-perforated anchoring leg and grout joint spacer.
      b. Product: Provide “Schluter-SCHIENE” edging manufactured by Schluter Systems, or equal.
      c. Material: Stainless steel.

B. Other Accessories: Provide accessories and secondary items normally furnished or necessary for a complete installation; or supplied, required, recommended, or accepted by the manufacturer for actual in-service conditions applicable to the project.

PART 3 - EXECUTION

3.1 EXAMINATION

A. Oversight: Ensure an adequate number of supervisors are present and proper supervision practices are followed at the project site before the installer begins work and at all times during installation.

B. Verification:

1. Verify in-place construction, project conditions, and the work of other specification sections conform to the manufacturer's instructions and other requirements and recommendations.
2. Verify subfloor surfaces are properly secured, smooth, and flat to minimum floor flatness and levelness tolerances required, recommended, or accepted by the manufacturer for the actual in-service conditions applicable to the project.

3. Verify substrates are dry and free of curing compounds, sealers, hardeners, and deleterious and other substances that might interfere with flooring adhesion, appearance, or performance.
4. Verify items penetrating flooring are installed.

C. Evaluation and Assessment:

1. Identify project conditions that do not conform to the manufacturer's instructions and other requirements and recommendations.
2. Perform or arrange and pay costs for all remedial work necessary to correct or improve deficient conditions, without limitation, before the installer begins work.

3.2 PREPARATION

A. Protection:

1. Work Area Protection: Protect work areas from dust and other airborne contaminants during surface preparation and carpet installation. Control and collect dust produced by grinding operations.
2. Adjacent Material Protection: Protect adjacent surfaces against soiling and damage; and from detrimental effects caused by surface profiling operations. Utilize drop cloths, shields, masking, barricades, and other items necessary to protect adjacent surfaces.

B. Substrate Preparation: Prepare substrates as required, recommended, or accepted by the manufacturer without limitation; and in a manner that does not result in any warranty or guarantee becoming void.

1. Remove substrate coatings and other substances that are incompatible with adhesives or that may negatively affect the quality of the installation, durability, appearance, or performance of either the furnished resilient flooring or adhesives.
2. Remove sub-floor ridges and bumps. Fill minor or local low spots, cracks, joints, holes, and other defects with leveling and patching compound. Apply, trowel, and float patching compound to achieve smooth, flat, hard surface. Prohibit traffic until patching compound is cured.
3. Test substrates for alkalinity (pH), MVER, and relative humidity (RH) and perfrom corrective work, and substrate preparation as specified in Section 09 05 16 and required by the manufacturer.
4. Repair damaged sub-floor and fill cracks.
5. Vacuum-clean substrate.

C. Bond Test: Perform and document bond tests as required, recommended, or accepted by the manufacturer, must be performed and documented before beginning installation.

3.3 INSTALLATION

A. General Requirements:

1. Install carpet using materials and methods required, recommended, or accepted by the manufacturer, along with manufacturer-recommended accessories and techniques.
2. Only install carpet under conditions that ensure finishes are free from blemishes and defects.
3. Completed work must match approved samples and mockups, as accepted by the Architect.
4. Installed carpet must be warrantable. Do not install, correct, or replace carpet in a manner that results in any warranty or guarantee becoming void.

B. Special Techniques:

1. Scribe, cut, and fit carpet to butt neatly and tightly to vertical surfaces and permanent fixtures including built-in furniture, cabinets, pipes, outlets, and door frames.
2. Extend carpet into toe spaces, door reveals, closets, and similar openings. Extend carpet to centerline of doors in the closed position.
3. Maintain reference markers, holes, and openings that are in place or marked for future cutting by repeating on carpet as marked on substrates. Use pencil, chalk, or other nonpermanent, non-staining marking device. The use of markers is prohibited.
4. Adhere carpet to substrate to produce a completed installation without open cracks, voids, raising and puckering at joints, telegraphing of adhesive spreader marks, and other surface imperfections.

C. Interface with Adjacent Items: Provide materials, components, and accessories normally furnished or necessary to securely adhere carpet to supporting construction.

3.4 CORRECTION AND REPAIR

A. Non-conforming, damaged, and defective work must be brought into conformance with the Contract Documents. Correct and repair as necessary, without limitation, including arranging all correction and repair work and paying all correction and repair costs, until accepted in writing by the Architect.

B. Corrective and repair work must be performed in conformance with a correction and repair plan submitted to and accepted in writing by the Architect before correction or repair work begins. At a minimum, correction and repair plans must include

1. written descriptions of non-conforming, damaged, and defective work;
2. supporting sketches, diagrams, photographs, and other visual depictions of non-conforming, damaged, and defective work; and
3. similar written descriptions and visual depictions of Contractor-proposed corrections and repairs.

C. Arrange and pay costs for removing and replacing work that cannot be corrected or repaired to the Architect's acceptance.

3.5 CLEANING

A. Cleaning Work: Clean spills, stains, and soiling from all visible carpet surfaces in a manner that does not result in any warranty or guarantee becoming void.

1. Use cleaning materials, equipment, and accessories supplied, and means, methods, techniques, and procedures required, recommended, or accepted by the

manufacturer.

2. Do not use cleaning materials or procedures known to change, or that might change, the appearance of exposed finishes or adjacent surfaces; or cause deterioration or damage to exposed finishes or adjacent surfaces.
3. Protect adjacent surfaces not being cleaned from staining, deterioration, damage, or other detrimental effects caused by cleaning.
4. Arrange and pay costs for removing and replacing work that cannot be cleaned to the Architect's acceptance.

B. Waste Management: After completing the work of this specification section, leave work areas free from debris, waste, scrap, equipment, tools, and other items.

3.6 PROTECTION

A. Protect installed flooring in place from soiling, deterioration, and damage until Substantial Completion. Poly-Tak Surface-Shields, Carpet Mask, and similar masking systems are prohibited.

B. Do not store anything on, adjacent to, or against installed carpet unless it is protected from damage, as accepted in writing by the manufacturer's representative. Do not use installed carpet as work surfaces.

C. Remove protection when it's no longer needed and before Substantial Completion.

END OF SECTION

SECTION 09 72 17
RIGID SHEET WALL PROTECTION

PART 1 GENERAL

1.01 SECTION INCLUDES:

A. Palladium® Rigid Vinyl Sheet for wall protection and decoration.

1.02 SUBMITTALS

A. Submit as specified in Section 01 33 01 - Submittals.

B. Detail Drawings: Mounting details with the appropriate adhesives for specific project substrates.

C. Samples: Verification samples of Palladium® Rigid Vinyl Sheet ,and Beadboard: 8" (203mm) square, of each type and color indicated.

D. Manufacturer's Installation Instruction: Printed installation instructions for Palladium® Rigid Vinyl Sheet.

1.03 REGULATORY REQUIREMENTS

A. Conform to the applicable portions of the 2019 California Building Code.

1.04 SYSTEM DESCRIPTION

A. Performance Requirements: Provide Palladium® Rigid Vinyl Sheet systems that conform to the following requirements of regulatory agencies and the quality control of IPC Door and Wall Protection Systems™, InPro Corporation.

1. Fire Performance Characteristics: Provide UL Classified Palladium® Rigid Vinyl Sheet conforming with the NFPA Class A fire rating. Surface burning characteristics as determined by UL-723 (ASTM E-84), for Palladium® Rigid Vinyl Sheet installed with 3M Fastbond 30, InPro Bond Adhesive, or Formulated Solutions, LLC “XT-2000+" Adhesive shall be a maximum flame spread of 20 and a maximum smoke developed of 350 for .060" (1.5mm) thick material.

1.05 DELIVERY, STORAGE, AND HANDLING

A. Deliver, store, protect and handle products at site as specified in Section 01 65 01.

PART 2 PRODUCTS

2.01 MANUFACTURER

A. Acceptable Manufacturer: IPC Door and Wall Protection Systems, InPro Corporation, PO Box 406 Muskego, WI 53150 USA; Telephone: 800.222.5556, Fax: 888.715.8407, www. inprocorp.com

2.02 MANUFACTURED UNITS

A. Rigid Vinyl Sheet

1. Palladium® Rigid Vinyl Sheet
4'x8' (1.22m x 2.44m) .030" = 1/32" (.8mm), standard
4' x 10' (1.22m x 3.04m) sheets - 030" (.8mm
4' x 120' (1.22m x 36.5m) rolls - 030" (.8mm)

2. Vinyl Accessories:
409 Inside Corner; Length: 8' (2.44m) standard
3348 Outside Corners, no tape,; 3” x 3” x 48”
3396 Outside Corners, no tape,; 3” x 3” x 96”

B. See separate color and materials supplement for specific products.

C. Color Matched Caulk

2.03 MATERIALS

A. Vinyl: Palladium® Rigid Vinyl Sheet shall be manufactured from chemical and stain resistant polyvinyl chloride with the addition of impact modifiers. No plasticizers shall be added (plasticizers may aid in bacterial growth).

2.04 ACCESSORIES

A. Top caps, inside corners, divider bars and outside corners shall be made of extruded PVC.

2.05 FINISHES

A. Color or pattern of Palladium® Rigid Vinyl Sheet to be selected by the architect from the Palladium® Rigid Vinyl Sheet finish selection. Surface shall have a velvet texture.

B. Vinyl Accessories: Top caps, inside corners, divider bars and outside corners shall be of a color matching the IPC.

PART 3 - EXECUTION

3.01 EXAMINATION

A. Examine areas and conditions in which the rigid vinyl sheet will be installed.

1. Complete all finishing operations, including painting, before beginning installation of rigid vinyl sheet materials.

B. Wall surface shall be dry and free from dirt, grease and loose paint.

3.02 PREPARATION

A. Prepare substrate in accordance with Section 09 01 70.

B. General: Prior to installation, clean substrate to remove dust, debris and loose particles.

3.03 INSTALLATION

A. General: Locate the Palladium® Rigid Vinyl Sheet and Beadboard as indicated on the approved detail drawing for the appropriate substrate and in compliance with the IPC installation instructions. Install level and plumb at the height indicated on the drawings.

B. Installation of Palladium® Rigid Vinyl Sheet

1. Adhere to substrate with InPro Bond, a freeze-thaw stable, nonflammable, high strength, water based adhesive that trowels on and allows approximately 20 minutes working time before firming.
2. Adhere to substrate with XT-2000+, a freeze-thaw stable,nonflammable, high strength, water based adhesive that trowels on and allows approximately 20 minutes working time before firming.
3. Adhere to substrate with Fastbond 30, a nonflammable, high strength, water-dispersed contact adhesive, with very little odor. Smooth roll surface.

3.04 CLEANING

A. At completion of the installation, clean surfaces in accordance with the IPC clean-up and maintenance instructions.

END OF SECTION

SECTION 09 81 33

ACOUSTICAL INSULATION, SEALANTS, AND ACCESSORIES

PART 1 - GENERAL

1.1 SUMMARY

A. Section Includes:
1. Concealed acoustical insulation.
2. Acoustical sealants.
3. Acoustical spray.
4. Firestop and acoustical putty pads.
5. Installation materials.
6. Supplementary components and accessories normally furnished or necessary for a complete installation, whether or not such items are indicated on the Drawings or included in the Specifications.

1.2 REFERENCES

A. Definitions:
1. Manufacturer: Means the acoustical insulation or accessory manufacturer, as the context admits, manufacturer, unless otherwise indicated.

1.3 SUBMITTALS

A. Action Submittals: Submit the following for responsive action (formal review and approval).
1. Product Data: Submit manufacturer's product data, specifications, typical installation details, and all other information necessary to show conformance to the Contract Documents, excluding material safety data sheets (MSDSs), which are returned to the Contractor without review or responsive action.

B. Informational Submittals: Submit manufacturer's instructions for information (informal review: responsive action not expected or required, except to record non-conformance with submittal requirements).
1. Submit manufacturer-prepared published instructions for proper installation of furnished insulation.
2. If manufacturer's instructions are unavailable or do not apply to specific project conditions, then consult the manufacturer's representative and obtain project-specific supplemental instructions printed on manufacturer's letterhead.
3. Promptly distribute supplemental instructions to the Architect, who may have comments that lead to contract modifications or minor changes in the work.

1.4 HANDLING

A. Receiving: Inspect all deliveries for deteriorated, damaged, and defective items.
1. Reject items that are not packaged in a manner that prevents damage; or that exhibit deterioration or damage or have damaged or open packaging or containers.

2. Unload and store only inspected and accepted items.

B. Storage: Store unloaded items as shipped, upright in their original containers, indoors within dry, well-ventilated, broom-cleaned, and partially- or permanently-enclosed storage areas.

C. Damaged Item Replacement: Promptly remove and replace items that are deteriorated, damaged, or defective with undamaged new items that do not exhibit deterioration, damage, or defects.

D. Packaging Waste Management: Do not burn or bury construction waste at the project site. Remove and legally dispose of all construction waste away from the project site.

1.5 PROJECT CONDITIONS

A. Existing Conditions: Surfaces receiving acoustical insulation must be dry.

PART 2 - PRODUCTS

2.1 CONCEALED ACOUSTICAL INSULATION

A. Sound Attenuating Fire Blanket Insulation:
1. Description: Asbestos-free mineral fiber blanket insulation conforming to ASTM C 665 requirements for Type I insulation, manufactured from slag and naturally occurring rock.
2. Manufacturers: Provide products manufactured by one of the following
a. Fibrex Insulations Inc.
b. Owens Corning.
c. Roxul Inc.
d. Thermafiber
3. Products: Provide “Thermafiber Sound Attenuating Fire Blankets (SAFB)” manufactured by Owens Corning, or equal. Batts shall be 3” thick, minimum 2.5 pcf density. Batt width shall be 1” wider than stud cavity to allow for “creased” installation.

2.2 ACOUSTICAL SEALANTS

A. Latex-Based Sealants:
1. Application: Installed where indicated at exposed and concealed joints and annular spaces around through-penetrations.
2. Description: Nonsag, paintable, non-staining siliconized acrylic-latex sealant conforming to ASTM C 834 requirements for Type OP (opaque sealant), Grade NF (does not meet the requirements for low temperature flexibility of Grade 0°C classification).
3. Products: Provide one of the following, or equal.
a. “CP 506 Smoke and Acoustic Sealant” manufactured by Hilti, Inc.
b. “QuietZone Acoustic Sealant” manufactured by Owens Corning.
c. “Tremflex 834” manufactured by Tremco, Inc.
d. “Sheetrock Acoustical Sealant” manufactured by USG Corp.

4. Requisite Properties:
   a. Color: White.

B. Non-Drying, Non-Hardening, Non-Skinning Sealants:
   1. Description: Single-component butyl rubber sound dampening elastomeric sealant.
   2. Application: Installed at concealed joints where indicated.
   3. Products: Provide one of the following, or equal.
      a. “BA-98” manufactured by Pecora Corp.
      b. “QuietSeal Acoustical Sealant QS-350” manufactured by Serious Materials, Inc.
   c. “Acoustical Sealant” manufactured by Tremco, Inc.

C. Preformed Tape Sealants:
   1. Description: Compressible, self-extinguishing, UL-listed closed cell polyvinyl chloride foam tape with pressure sensitive adhesive.
   2. Application: Installed at concealed joints where indicated.
   3. Product: Provide “Norseal V740FR” manufactured by Norton Performance Plastics Corp., or equal.
   4. Requisite Properties:
      a. Size: One-inch minimum roll width.
      b. Thickness: At least 3/8-inch.
      c. Density: At least 6 pounds per cubic foot.
      d. Facing: Furnish tape in rolls with protective release liner on non-adhesive face.

2.3 ACOUSTICAL SPRAY

A. Description: Sprayable acrylic latex material.

B. Application: Installed where indicated at exposed and concealed static or minimally dynamic joints or gaps in wall construction.

C. Products: Provide one of the following, or equal.
   1. “CP 572 Smoke and Acoustic Spray” manufactured by Hilti, Inc.
   2. “Spec Seal Smoke & Sound” manufactured by Specified Technologies, Inc.

D. Requisite Properties:
   1. Spray must be mold and mildew resistant in conformance with ASTM G21.
   2. Spray must have a minimum movement capability of at least 12.5 percent.

2.4 FIRESTOP AND ACOUSTICAL PUTTY PADS

A. Description: Sound deadening pads used to seal the external surfaces (back side) of metallic and nonmetallic switch and receptacle boxes to reduce airborne sound transmission in interior partitions.

B. Products:
   1. Fire-Resistance Rated Construction (Firestop Putty Pads): Provide one of the following, or equal.
      a. “CP 617 Firestop Putty Pads” manufactured by Hilti, Inc.

b. “Putty Pads” manufactured by International Protective Coatings
c. “Type FSP Firestop Putty” pads by Nelson Electric.
d. “Putty Pads” manufactured by Specified Technologies, Inc.

2. Elsewhere (Acoustical Putty Pads): Provide one of the following, or equal.
   a. “Lowry Box Pads” manufactured by Henry A. Lowry Co.
   b. “Sound Pad #68” manufactured by LH Dottie Co.

2.5 INSTALLATION MATERIALS

A. Insulation Hangers:
   1. Manufacturer: Provide products manufactured by AGM Industries, Inc., or equal.
   2. Products: Provide the following, or equal.
      a. Anchors: “TACTOO Insul-Hangers” adhesively attached spindle-type anchors.
      b. Adhesive: “BOSS 348 Multi-Purpose Construction Adhesive” manufactured by Accumetric, LLC or other VOC-compliant insulation hanger adhesive.
      c. Insulation Standoff: One-inch “Clutch Clip”.
      d. Insulation Retaining Washers: “Style RC 200” round or “SC 250” square washers.
   3. Requisite Properties:
      a. Base Plate and Insulation Standoff and Retaining Washers: At least 2-inch square by at least 0.149-inch (MSG 28) base metal thickness galvanized perforated steel sheet.
      b. Retaining Washers: At least 1-1/2-inch square or diameter by at least 0.149-inch (MSG 28) base metal thickness galvanized perforated steel sheet.
      c. Spindle: At least 0.106-inch diameter (SWG 12), zinc-coated wire, depth to suit depth of insulation indicated.
      d. Adhesive: Adhesive used with impaling pins must either be manufactured or accepted by the insulation hanger manufacturer. “Peel and press” hangers with self-adhering adhesive backings are prohibited.

B. Mechanical Fasteners: Provide tape, staples, and other devices for fastening insulation as required, recommended, or accepted by the insulation manufacturer.

C. Hanger Wire: At least 0.106-inch diameter (SWG 12) soft temper zinc-coated wire conforming to ASTM A 641, Class 3 or A coating.

D. Adhesive for Bonding Insulation: Product with demonstrated capability to bond insulation securely to substrates indicated without damaging insulation and substrates.

2.6 ACCESSORIES

A. Accessories: Provide accessories and secondary items normally furnished or necessary for a complete installation; or supplied, required, recommended, or accepted by the manufacturer for actual in-service conditions applicable to the project.

PART 3 - EXECUTION

3.1 EXAMINATION

A. Oversight: Ensure an adequate number of supervisors are present and proper supervision practices are followed at the project site before the installer begins work and at all times during installation.

B. Verification: Verify in-place supporting and adjacent construction conforms to the manufacturer's requirements or recommendations and satisfies all other conditions that might affect the quality of installation or the durability, appearance, or performance of installed and adjacent items.

C. Evaluation and Assessment:

1. Identify project conditions that do not conform to the manufacturer's instructions and other requirements and recommendations.
2. Perform or arrange and pay costs for all remedial work necessary to correct or improve deficient conditions, without limitation, before the installer begins work.

3.2 INSTALLATION

A. General Requirements:

1. Install acoustical insulation using materials and methods required, recommended, or accepted by the manufacturer, along with manufacturer-recommended accessories and techniques.
2. Extend acoustical insulation to envelop entire area insulated. Cut and fit tightly around obstructions and fill voids with insulation. Remove projections that interfere with placement.
3. Provide sizes to fit applications indicated and selected from manufacturer's standard thicknesses, widths, and lengths. Apply single layer of acoustical insulation to produce thickness indicated unless multiple layers are otherwise shown or required to make up total thickness.
4. Installed acoustical insulation must be warrantable. Do not install, correct, or replace acoustical insulation in a manner that results in any warranty or guarantee becoming void.

B. Special Techniques:

1. Wall Insulation:
   a. Install acoustical insulation in cavities formed by framing members.
   b. Using SAFB 1 inch wider than regular blankets, bow the blankets slightly to fit into stud cavity. Slit the blankets vertically 1inch deep with a utility knife down the center. Provide lengths that will produce a snug fit between ends.
   c. Place acoustical insulation in cavities formed by framing members to produce a friction fit between edges of insulation and adjoining framing members.
   d. Maintain 3-inch clearance around recessed lighting fixtures not rated for or protected from contact with acoustical insulation.
      e. Stuff loose-fill insulation into miscellaneous voids and cavity spaces where shown. Compact to roughly 40 percent of normal maximum volume.
      f. For metal-framed wall cavities higher than 96 inches, support unfaced blankets mechanically and support faced blankets by taping insulation flanges to metal stud flanges.
2. Ceiling Insulation:
   a. Install blanket acoustical insulation above ceilings where indicated.
   b. Maintain 3-inch clearance of acoustical insulation around recessed lighting fixtures.
3. Acoustical Sealant Installation:
   a. At sound-rated assemblies and elsewhere indicated, seal construction in

conformance with ASTM C 919 with a continuous bead of acoustical sealant at perimeter, behind control joints, and at openings and penetrations.

b. Install acoustical sealant to both faces of partitions at perimeters and through penetrations.

C. Acoustical Installation Requirements:

1. Application: Apply acoustical sealant where shown on drawings and the following.
   a. Both sides and perimeter of door and window frames.
   b. Penetrations of walls and slabs by piping, ventilation ducts, conduits, cables, cable trays.
   c. Perimeter and between gypsum joints of all sound isolating walls and ceilings.
2. Acoustical Sealant:
   a. Use continuous beads of acoustical sealant to seal assemblies at head, sill, perimeter, and penetrations, and joints between layers of sound isolating gypsum board construction.
   b. Comply with ASTM C 919 requirements for use of joint sealants in acoustical applications as applicable to materials and conditions indicated.
3. Sheet Sealant:
   a. In fall full height, sound rated, and sound sensitive walls, cover back and sides of all electrical, telephone, and communication boxes with specified acoustical pads.
   b. Verify unused knockouts are plugged before installing the pads. Mold pads tightly to the boxes and to the adjacent surfaces.
4. Installation:
   a. To seal gaps 3/8-inch in dimension and larger, pack with glass/mineral fiber batt prior to installing sealant materials.
   b. Use compressible closed-cell foam backer rod as required. Uncompressed backer rod width should be 30 to 50 percent greater than joint width.

D. Interface with Adjacent Items: Provide materials, components, and accessories normally furnished or necessary to securely attach acoustical insulation to supporting construction.

3.3 CORRECTION AND REPAIR

A. Non-conforming, damaged, and defective work must be brought into conformance with the Contract Documents. Correct and repair as necessary, without limitation, including arranging all correction and repair work and paying all correction and repair costs, until accepted in writing by the Architect.

B. Corrective and repair work must be performed in conformance with a correction and repair plan submitted to and accepted in writing by the Architect before correction or repair work begins. At a minimum, correction and repair plans must include

1. written descriptions of non-conforming, damaged, and defective work;
2. supporting sketches, diagrams, photographs, and other visual depictions of non-conforming, damaged, and defective work; and
3. similar written descriptions and visual depictions of Contractor-proposed corrections and repairs.

C. Arrange and pay costs for removing and replacing work that cannot be corrected or repaired to the Architect's acceptance.

3.4 CLEANING

A. Waste Management: After completing the work of this specification section, leave work areas free from debris, waste, scrap, equipment, tools, and other items.

3.5 PROTECTION

A. Protect installed acoustical insulation in place from becoming wet, deterioration, and damage until covering.

B. Do not store anything adjacent to or against installed acoustical insulation unless it is protected from damage, as accepted in writing by the manufacturer's representative. Do not use installed acoustical insulation as work surfaces.

C. Remove protection when it's no longer needed and before covering.

END OF SECTION

SECTION 10 11 16

MARKERBOARDS

PART 1 - GENERAL

1.1 SUMMARY

A. Section Includes:
   1. Porcelain enamel steel markerboards.
   2. Supplementary components and accessories normally furnished or necessary for a complete installation, whether or not such items are indicated on the Drawings or included in the Specifications.

1.2 REFERENCES

A. Definitions:
   1. Manufacturer: Means the markerboard manufacturer, unless otherwise indicated.

1.3 SUBMITTALS

A. Action Submittals: Submit the following for responsive action (formal review and approval).
   1. Product Data: Submit manufacturer's product data, specifications, typical installation details, and all other information necessary to show conformance to the Contract Documents, excluding material safety data sheets (MSDSs), which are returned to the Contractor without review or responsive action.
   2. Shop Drawings: Include project-specific dimensioned details drawn to scale showing conditions not detailed on the product data; or that are detailed, but not in a manner specific to the project.
   3. Samples:
      a. Submit at least 8-inch square representative samples of each markerboard color, finish, and variety.
      b. Submit at least 8-inch long representative samples of each markerboard trim type, color, finish, and variety.

B. Informational Submittals: Submit manufacturer's instructions for information (informal review: responsive action not expected or required, except to record non-conformance with submittal requirements).
   1. Submit manufacturer-prepared published instructions for proper installation of furnished markerboards.
   2. If manufacturer's instructions are unavailable or do not apply to specific project conditions, then consult the manufacturer's representative and obtain project-specific supplemental instructions printed on manufacturer's letterhead.
   3. Promptly distribute supplemental instructions to the Architect, who may have comments that lead to contract modifications or minor changes in the work.

C. Closeout Submittals: Submit copies of manufacturer's instructions and other requirements and recommendations for markerboard maintenance, cleaning, and repair to the Architect

as a condition of project closeout.

1.4 QUALITY ASSURANCE

A. Source Limitations:
   1. Markerboards must be obtained through one source from the same manufacturer (to ensure compatibility, regulatory conformance, and a warrantable installation).
      a. Certain items may be obtained from more than one manufacturer, but only when used for separate installations.
      b. Items provided for each different installation must be obtained from the same source and manufacturer.
   2. Provide secondary materials, components, accessories and other items from sources required, recommended, or accepted by the primary manufacturer for actual in- service conditions applicable to the project.

1.5 HANDLING

A. Receiving: Inspect all deliveries for deteriorated, damaged, and defective items.
   1. Reject items that are not packaged in a manner that prevents damage; or that exhibit deterioration or damage or have damaged or open packaging or containers.
   2. Reject items that are not transported, delivered, or protected in conformance with manufacturer-recommended transport, delivery, and receiving requirements.
   3. Unload and store only inspected and accepted items.

B. Storage: Store unloaded items indoors as shipped, upright in their original packaging or containers, within dry, well-ventilated, broom-cleaned and enclosed storage areas.

C. Handling: Handle items in conformance with manufacturer's instructions and other requirements and recommendations, and in a manner that that prevents damage. Avoid damage to packaging and containers, and contamination of contents.

D. Damaged Item Replacement: Promptly remove and replace deteriorated, damaged, or defective markerboards with undamaged new markerboards that do not exhibit deterioration, damage, or defects.

E. Packaging Waste Management: Do not burn or bury construction waste at the project site. Remove and legally dispose of all construction waste away from the project site.

PART 2 - PRODUCTS

2.1 MANUFACTURERS

A. Manufacturers: Provide products manufactured by one of the following, or equal.
   1. Claridge Products and Equipment, Inc.
   2. Clarus Glassboards.
   3. MorreCo Inc.
   4. PolyVision Corp.

2.2 PORCELAIN ENAMEL STEEL MARKERBOARDS

A. Description: Balanced, 3-ply high-pressure laminate boards consisting of face sheet, core

material, and backing.

B. Product: Provide “Series 3” manufactured by Claridge Products and Equipment, Inc., or equal.

C. Requisite Properties:
1. Style: “Type A”, or equal.
2. Size: Indicated on the Drawings.
3. Thickness: 1/2-inch.
4. Writing Surface Color: Light gray.
5. Writing Surface Finish: Matte.
6. Trim: 5/8 inch wide clear anodized extruded aluminum.

D. Materials:
1. Face Sheet: At least 0.0209-inch BMT (MSG 25) porcelain-enameling sheet conforming to ASTM A 424 Type I (direct cover coat), commercial steel (CS), tension- leveled to a flatness of 5 I-units or less.
2. Core Panel: At least 1/4-inch thick high-density fiberboard (hardboard) conforming to ANSI/AHA A135.4 requirements for Class 1 (tempered) hardboard, S1S (one smooth side).
3. Backing Sheet: At least 0.005-inch thick aluminum foil.

E. Construction:
1. Provide units in a single un-spliced panel.
2. Where the dimensions shown exceed available sizes, provide two or more equal size pieces acceptable to the Architect.
3. Where the dimensions cause delivery in separate units, pre-fit components at the factory, disassemble for delivery, and make final joints at the site. Use splines at joints to maintain surface alignment.

2.3 ACCESSORIES

A. Accessories: Provide accessories and secondary items normally furnished or necessary for a complete installation; or supplied, required, recommended, or accepted by the manufacturer for actual in-service conditions applicable to the project.

PART 3 - EXECUTION

3.1 EXAMINATION

A. Oversight: Ensure an adequate number of supervisors are present and proper supervision practices are followed at the project site before the installer begins work and at all times during installation.

B. Verification: Verify in-place supporting and adjacent construction conforms to the manufacturer’s requirements or recommendations and satisfies all other conditions that might affect the quality of installation or the durability, appearance, or performance of installed and adjacent items.

C. Evaluation and Assessment:

1. Identify project conditions that do not conform to the manufacturer's instructions and other requirements and recommendations.
2. Perform or arrange and pay costs for all remedial work necessary to correct or improve deficient conditions, without limitation, before the installer begins work.

3.2 INSTALLATION

A. General Requirements:
1. Install markerboards using materials and methods required, recommended, or accepted by the manufacturer, along with manufacturer-recommended accessories and techniques.
2. Set items true to line, to required levels and lines, and plumb, level, and square, without warp or rack, with flush well-fitted joints, and in alignment with adjacent construction
3. Installed markerboards must be warrantable. Do not install, correct, or replace markerboards in a manner that results in any warranty or guarantee becoming void.

B. Interface with Adjacent Items: Provide materials, components, and accessories normally furnished or necessary to securely attach markerboards to supporting construction.

C. Installation Tolerances: Install markerboards to an allowable tolerance variation of not more than 1/4-inch from true position and not more than 1/8-inch from plumb, level, and alignment.

3.3 CORRECTION AND REPAIR

A. Non-conforming, damaged, and defective work must be brought into conformance with the Contract Documents. Correct and repair as necessary, without limitation, including arranging all correction and repair work and paying all correction and repair costs, until accepted in writing by the Architect.

B. Corrective and repair work must be performed in conformance with a correction and repair plan submitted to and accepted in writing by the Architect before correction or repair work begins. At a minimum, correction and repair plans must include
1. written descriptions of non-conforming, damaged, and defective work;
2. supporting sketches, diagrams, photographs, and other visual depictions of non-conforming, damaged, and defective work; and
3. similar written descriptions and visual depictions of Contractor-proposed corrections and repairs.

C. Arrange and pay costs for removing and replacing work that cannot be corrected or repaired to the Architect's acceptance.

3.4 CLEANING

A. Cleaning Work: Clean all visible markerboard surfaces in a manner that does not result in any warranty or guarantee becoming void.
1. Use cleaning materials, equipment, and accessories supplied, and means, methods, techniques, and procedures required, recommended, or accepted by the manufacturer.
2. Do not use cleaning materials or procedures known to change, or that might change, the appearance of exposed finishes or adjacent surfaces; or cause deterioration or

damage to exposed finishes or adjacent surfaces.

3. Protect adjacent surfaces not being cleaned from staining, deterioration, damage, or other detrimental effects caused by cleaning.
4. Arrange and pay costs for removing and replacing work that cannot be cleaned to the Architect's acceptance.

B. Waste Management: After completing the work of this specification section, leave work areas free from debris, waste, scrap, equipment, tools, and other items.

3.5 PROTECTION

A. Protect installed markerboards in place from soiling, deterioration, and damage until Substantial Completion.

B. Do not store anything on or adjacent to or against installed markerboards unless they are protected from damage, as accepted in writing by the manufacturer's representative. Do not use installed markerboards as work surfaces.

C. Remove protection when it's no longer needed and before Substantial Completion.

END OF SECTION

SECTION 10 26 00

CORNER GUARDS

PART 1 GENERAL

1.01 Summary

A. This section includes the following types of wall protection systems:
   1. Corner Guards

1.02 References

A. National codes (IBC, UBC, SBCCI, BOCA and Life Safety)

B. American Society for Testing and Materials (ASTM)

C. Underwriters Laboratories (UL)

1.03 Submittals

A. General: Submit the following in accordance with conditions of contract and Division 1.

B. Product data and detailed specifications for each system component and installation accessory required, including installation methods for each type of substrate.

C. Shop drawings showing locations, extent and installation details of corner guards. Show methods of attachment to adjoining construction.

D. Samples for verification purposes: Submit one 6’ long full size sample.

1.04 Quality Assurance

A. Installer qualifications: Engage an installer who has no less than 3 years experience in installation of systems similar in complexity to those required for this project.

B. Manufacturer’s qualifications: Not less than 5 years experience in the production of specified products and a record of successful in-service performance.

C. Code compliance: Assemblies should conform to all applicable codes.

D. Single source responsibility: Provide all components of the wall protection system manufactured by the same company to ensure compatibility of color, texture and physical properties.

1.05 Delivery, Storage and Handling

A. Deliver materials to the project site in unopened original factory packaging clearly labeled to show manufacturer.

B. Store materials in original, undamaged packaging in a cool, dry place out of direct sunlight and exposure to the elements. A minimum room temperature of 40°F (4°C) and a maximum of 100°F (38°C) should be maintained.

PART 2 PRODUCTS

2.01 Manufacturers

A. Interior surface protection products shall be manufactured by InPro Corporation or equal.

2.02 Materials

A. Type 304 Stainless Steel, 16 gauge, #4 satin finish.

2.03 Corner Guards

A. Minimum 3” x 3” x 96”, with 1/8” radius corner. Edges of wings shall have slight angle to provide tight fit to wall.

2.04 Adhesive

A. Field-applied heavy duty adhesive as recommended by manufacturer.

PART 3 EXECUTION

3.01 Examination

A. Verification of conditions: Examine areas and conditions under which work is to be performed and identify conditions detrimental to proper or timely completion.

1. Do not proceed until unsatisfactory conditions have been corrected.

3.02 Preparation

A. Surface preparation: Prior to installation, clean substrate to remove dirt, debris and loose particles. Perform additional preparation procedures as required by manufacturer's instructions.

3.03 Installation

A. Install the work of this section in strict accordance with the manufacturer's recommendations, using only approved mounting hardware, and locating all components firmly into position, level and plumb.

B. Temperature at the time of installation must be between 65°-75°F (18°-24°C) and be maintained for at least 48 hours after the installation.

3.04 Cleaning

A. General: Immediately upon completion of installation, clean guards and accessories in accordance with manufacturer’s recommended cleaning method.

3.05 Protection

A. Protect installed materials to prevent damage by other trades. Use materials that may be easily removed without leaving residue or permanent stains.

END OF SECTION

SECTION 10 26 13
HANDRAIL AND CHAIR RAIL

PART 1 - GENERAL

1.01 SECTION INCLUDES:

A. Complete G2-800 Series Handrail System,

B. G2-800 replacement covers, corners, and returns for existing handrails to remain.

C. 2600 Chair Rail System

1.02 SUBMITTALS

A. Submit as specified in Section 01 33 01 - Submittals.

B. Detail Drawings: Mounting details with the appropriate fasteners for specific project substrates.

C. Samples: Verification samples of handrail and chair rail covers, corners, and returns, 8” long, of each type and color indicated.

D. Manufacturer's Installation Instruction: Printed installation instructions for handrail and chair rail systems.

1.03 REGULATORY REQUIREMENTS

A. Conform to the applicable portions of the 2019 California Building Code.

1.04 SYSTEM DESCRIPTION

A. Performance Requirements: Provide complete handrail system, handrail replacement covers, corners, and returns, and chair rail systems, that conform to the following requirements of regulatory agencies and the quality control of IPC Door and Wall Protection Systems,, InPro Corporation.

1. Fire Performance Characteristics: Provide UL Classified Palladium® Rigid Vinyl Sheet conforming with the NFPA Class A fire rating. Surface burning characteristics as determined by UL-723 (ASTM E-84), for Palladium® Rigid Vinyl Sheet installed with 3M Fastbond 30, InPro Bond Adhesive, or Formulated Solutions, LLC “XT-2000+" Adhesive shall be a maximum flame spread of 20 and a maximum smoke developed of 350 for .060" (1.5mm) thick material.

1.05 DELIVERY, STORAGE, AND HANDLING

A. Deliver, store, protect and handle products at site as specified in Section 01 65 01.

PART 2 - PRODUCTS

2.01 MANUFACTURER

A. Acceptable Manufacturer: IPC Door and Wall Protection Systems, InPro Corporation, PO Box 406 Muskego, WI 53150 USA; Telephone: 800.222.5556, Fax: 888.715.8407, www. inprocorp.com

2.02 MANUFACTURED UNITS

A. Handrail system, replacement cover, corners, and returns

1. G2-800 Handrail 5-1/2” high x 1-1/2” gripping diameter

B. Chair Rail Profile

1. 2600 Chair Rail, 3” high x 1” depth

2.03 MATERIALS

A. Handrail Vinyl: : Snap-on covers of .080" (2mm) thickness shall be extruded from chemical and stain resistant unplasticized polyvinyl chloride (uPVC) with the addition of impact modifiers. No plasticizers shall be added.

B. Chair Rail Vinyl: Snap on cover of .070" (1.8mm) thickness shall be extruded from chemical and stain resistant polyvinyl chloride with the addition of impact modifiers. No plasticizers shall be added (plasticizers may aid in bacterial growth).

C. Aluminum: Continuous aluminum retainer of .060" (1.5mm) thickness shall be fabricated from 6063-T5 aluminum, with a mill finish.

2.04 COMPONENTS

A. End caps, outside corners and inside corners shall be made of injection molded thermoplastics.

B. Fasteners: All mounting system accessories appropriate for substrates indicated on the drawings shall be provided.

2.05 FINISHES

A. Vinyl Covers: Colors of the handrail covers and chair rail to be selected by the architect from the IPC finish selection. Chair rail surface shall have a woodgrain texture.

B. Molded Components: End caps, outside corners and inside corners shall be of a color matching the handrail covers and chair rail. Handrail surface shall have a peblette texture. Chair rail surface shall have a woodgrain texture.

PART 3 - EXECUTION

3.01 EXAMINATION

A. Examine areas and conditions in which the handrail covers and chair rail will be installed.

1. Complete all finishing operations, including painting, before beginning installation of handrail covers and chair rail.

B. Wall surface shall be dry and free from dirt, grease and loose paint.

C. Verify that steel track backing has been installed at all bracket locations.

3.02 PREPARATION

A. General: Prior to installation, clean substrate to remove dust, debris and loose particles.

3.03 INSTALLATION; HANDRAIL COVERS AND RETURNS

A. General: Existing handrail covers, corners, and returns are to be removed and discarded. Existing aluminum handrail retainer, fasteners, and brackets are to be removed and re-installed only as necessary for installation of returns and Rigid Sheet Wall Protection specified under a separate section.

B. Installation of the complete handrail system and replacement handrail covers, corners, and returns.

1. Cut the aluminum retainer to the desired length, allowing 3-1/4" for each return, 1/4" for each outside corner and 4-11/16" for each inside corner.
2. Slide reveals onto returns and corners. Attach returns, inside corners, outside corners and brackets to the aluminum retainer. Install brackets 4” from ends of a run. Bracket spacing shall be maximum of 32” o.c.
2. Mount the aluminum retainer to the wall using the provided or existing fasteners; replace any existing fasteners that are damaged.
3. Cut the vinyl cover to fit between the returns and/or corners.
NOTE: Trim all factory edges square before installation. Position the vinyl cover on the aluminum retainer starting at the top of the retainer and pivoting the vinyl cover over the bottom of the retainer until it snaps into place.

3.04 INSTALLATION; CHAIR RAIL

A. General: Locate the chair rail as indicated on the approved detail drawing for the appropriate substrate and in compliance with the IPC installation instructions. Install chair rail level and plumb at the height indicated on the drawings.

B. Installation of 2600 Chair Rail:

1. Cut the aluminum retainer to the desired length, allowing 1-5/16" (33mm) for each end cap and inside corner, and 5/16" (8mm) for each outside corner.

2. Using a 1/4" drill bit, drill holes in the centerline of the aluminum retainer 4" (102mm) from each end and spaced evenly over the entire length (6 anchors per 12' (3.66m) length).
3. Position and level the aluminum retainer on the wall, allowing for end caps, inside corners, and outside corners, and transfer mounting holes to the wall with a marker. Drill 1/4" (6mm) holes at each mark and position the ALLIGATOR anchors into the holes on the wall. Mount the retainer with #10 x 1-3/4" phillips pan head screws and tighten the screws to secure the retainer.
4. Slide the end caps, inside corners, outside corners or picture frame corners onto the aluminum, leaving a 1/16" gap for adjustments, and secure them by using one 1-1/4" self-tapping screw per end cap or two per corner.
5. Cut the vinyl cover to the distance between the end caps/corners. NOTE: Trim all factory edges square before installation. Position the vinyl cover on the aluminum retainer starting at one end and working to the other end by pushing the cover over the aluminum until it snaps into place.

3.05 CLEANING

A. At completion of the installation, clean surfaces in accordance with the IPC clean-up and maintenance instructions.

END OF SECTION

SECTION 10 28 13

COMMERCIAL TOILET ACCESSORIES

PART 1 - GENERAL

1.1 SUMMARY

A. Section Includes:
   1. Commercial toilet accessories.
   2. Supplementary components and accessories normally furnished or necessary for a complete installation, whether or not such items are indicated on the Drawings or included in the Specifications.

1.2 REFERENCES

A. Definitions:
   1. Manufacturer: Means the toilet accessory manufacturer, unless otherwise indicated.

1.3 SUBMITTALS

A. Action Submittals: Submit the following for responsive action (formal review and approval).
   1. Product Data: Submit manufacturer's product data, specifications, typical installation details, and all other information necessary to show conformance to the Contract Documents, excluding material safety data sheets (MSDSs), which are returned to the Contractor without review or responsive action.
   2. Shop Drawings: Include project-specific dimensioned details drawn to scale showing conditions not detailed on the product data; or that are detailed, but not in a manner specific to the project.

B. Informational Submittals: Submit manufacturer's instructions for information (informal review: responsive action not expected or required, except to record non-conformance with submittal requirements).
   1. Submit manufacturer-prepared published instructions for proper installation of furnished toilet accessories.
   2. If manufacturer's instructions are unavailable or do not apply to specific project conditions, then consult the manufacturer's representative and obtain project-specific supplemental instructions printed on manufacturer's letterhead.
   3. Promptly distribute supplemental instructions to the Architect, who may have comments that lead to contract modifications or minor changes in the work.

1.4 QUALITY ASSURANCE

A. Source Limitations:

1. Toilet accessories must be obtained through one source from the same manufacturer (to ensure compatibility, regulatory conformance, and a warrantable installation).
   a. Certain items may be obtained from more than one manufacturer, but only when used for separate installations.

b. Items provided for each different installation must be obtained from the same source and manufacturer.

2. Provide secondary materials, components, accessories and other items from sources required, recommended, or accepted by the primary manufacturer for actual in- service conditions applicable to the project.

B. Regulatory Requirements:

1. Elements of sanitary facilities must be mounted at locations in conformance with California Building Code Sections 11B-602 through 11B-612.
2. Grab bars in toilet facilities and bathing facilities must conform to the requirements of California Building Code Section 11B-609. Grab bars and any wall or other surfaces adjacent to grab bars must be free of sharp or abrasive elements and must have rounded edges. The space around the grab bars must be as follows:
   a. 1-1/2-inch between the grab bar and the wall.
   b. 1-1/2-inch minimum between the grab bar and projecting objects below and at the ends.
   c. 12 inches minimum between the grab bar and projecting objects above.

1.5 HANDLING

A. Receiving: Inspect all deliveries for deteriorated, damaged, and defective items.

1. Reject items that are not packaged in a manner that prevents damage; or that exhibit deterioration or damage or have damaged or open packaging or containers.
2. Reject items that are not transported, delivered, or protected in conformance with manufacturer-recommended transport, delivery, and receiving requirements.
3. Unload and store only inspected and accepted items.

B. Storage: Store unloaded items indoors as shipped, upright in their original packaging or containers, within dry, well-ventilated, broom-cleaned and enclosed storage areas.

C. Handling: Handle items in conformance with manufacturer's instructions and other requirements and recommendations, and in a manner that that prevents damage. Avoid damage to packaging and containers, and contamination of contents.

D. Damaged Item Replacement: Promptly remove and replace deteriorated, damaged, or defective toilet accessories with undamaged new toilet accessories that do not exhibit deterioration, damage, or defects.

E. Packaging Waste Management: Do not burn or bury construction waste at the project site. Remove and legally dispose of all construction waste away from the project site.

PART 2 - PRODUCTS

2.1 MANUFACTURERS

A. Manufacturers: Provide products manufactured by one of the following, or equal.

1. Bobrick Washroom Equipment, Inc.
2. Go-Jo Purell
3. Georgia Pacific Compact
4. American Specialties, Inc

2.2 COMMERCIAL TOILET ACCESSORIES

A. Products: .Toilet & Shower rooms:
   1. Paper Towel Dispenser: Bobrick Model #B-262
   2. Soap Dispenser: Purell ES8 Model #7734-01 with #7745-GPH-18 Wall Guard
   3. Toilet Tissue Dispenser: Compact Model #56782
   4. Seat Cover Dispenser: Bobrick Model #B-221
   5. Channel Frame Mirror: Bobrick Model #B-165, 24”x42”, (not required at PT. Shower rooms or at Toilet rooms adjoining Peds rooms.
   6. Grab Bar: Bobrick Model #B-5086 with peened non-slip surface.
   7. Coat Hook: Bobrick Model #B-76717.

B. Products: at ceramic tile shower stalls (in addition to products in 2.2.A above):
   1. Folding Seat: Bobrick Model # B-5181, phenolic color selected by Agency
   2. Shower Curtain Rods: Bobrick Model # B-6047
   3. Soap Dish: Bobrick Model # B-4390
   4. Shower Curtain Hooks: Bobrick Model # B-204-1, 12 hooks

C. Products: Janitor Closet
   1. Shelf with Utility Hook and Mop Strip: Bobrick Model #B-298 8” x 24”.
   2. Utility Hook Strip: Bobrick Model #B-223 x 48”.

D. Products: Sinks / Lavatories not in Toilet Rooms:
   1. Paper Towel Dispenser: Bobrick Model #B-262
   2. Soap Dispenser: Purell ES8 Model #7734-01 with #7745-GPH-18 Wall Guard

E. Materials:
   1. Stainless-Steel Sheet: ASTM A 666 (annealed and tempered) Type 304 tension leveled to a flatness of 5 I-units or less.
   2. Mirrored Glass: ASTM C 1503, Q-1 Mirror Select Quality.

2.3 ACCESSORIES

A. Lavatory Shield:
   1. Description: Rigid high-impact PVC molded enclosure, white finish, covering all supply and drain piping assemblies below lavatory. Scribe and cut top of enclosure to fit underside of lavatory if it is not factory pre-fit to the lavatory. Field-drill three 1/2” diameter holes in bottom of enclosure to allow drainage.
   2. Manufacturers: Provide products manufactured by one of the following, or equal.
      a. IPS Corporation Trubro Lav Shield
      b. Zurn Z6900 - VG

B. Fastenings: Provide backings, inserts, loose connection hardware, fasteners, anchors, attachments, connectors, and other items supplied, required, recommended, or accepted by the manufacturer for actual in-service conditions applicable to the project.

C. Other Accessories: Provide other accessories and secondary items normally furnished or necessary for a complete installation; or supplied, required, recommended, or accepted by the manufacturer for actual in-service conditions applicable to the project.

PART 3 - EXECUTION

3.1 EXAMINATION

A. Oversight: Ensure an adequate number of supervisors are present and proper supervision practices are followed at the project site before the installer begins work and at all times during installation.

B. Verification: Verify in-place supporting and adjacent construction conforms to the manufacturer's requirements or recommendations and satisfies all other conditions that might affect the quality of installation or the durability, appearance, or performance of installed and adjacent items.

C. Evaluation and Assessment:

1. Identify project conditions that do not conform to the manufacturer's instructions and other requirements and recommendations.
2. Perform or arrange and pay costs for all remedial work necessary to correct or improve deficient conditions, without limitation, before the installer begins work.

3.2 INSTALLATION

A. General Requirements:

1. Install toilet accessories using materials and methods required, recommended, or accepted by the manufacturer, along with manufacturer-recommended accessories and techniques.
2. Set items true to line, to required levels and lines, and plumb, level, and square, without warp or rack, with flush well-fitted joints, and in alignment with adjacent construction
3. Installed toilet accessories must be warrantable. Do not install, correct, or replace toilet accessories in a manner that results in any warranty or guarantee becoming void.

B. Interface with Adjacent Items: Provide materials, components, and accessories normally furnished or necessary to securely attach toilet accessories to supporting construction.

C. Installation Tolerances: Install toilet accessories to an allowable tolerance variation of not more than 1/4-inch from true position and not more than 1/8-inch from plumb, level, and alignment.

3.3 CORRECTION AND REPAIR

A. Non-conforming, damaged, and defective work must be brought into conformance with the Contract Documents. Correct and repair as necessary, without limitation, including arranging all correction and repair work and paying all correction and repair costs, until accepted in writing by the Architect.

B. Corrective and repair work must be performed in conformance with a correction and repair plan submitted to and accepted in writing by the Architect before correction or repair work begins. At a minimum, correction and repair plans must include

1. written descriptions of non-conforming, damaged, and defective work;
2. supporting sketches, diagrams, photographs, and other visual depictions of non-conforming, damaged, and defective work; and
3. similar written descriptions and visual depictions of Contractor-proposed corrections and repairs.

C. Arrange and pay costs for removing and replacing work that cannot be corrected or repaired to the Architect's acceptance.

3.4 CLEANING

A. Cleaning Work: Clean all visible toilet accessory surfaces in a manner that does not result in any warranty or guarantee becoming void.
1. Use cleaning materials, equipment, and accessories supplied, and means, methods, techniques, and procedures required, recommended, or accepted by the manufacturer.
2. Do not use cleaning materials or procedures known to change, or that might change, the appearance of exposed finishes or adjacent surfaces; or cause deterioration or damage to exposed finishes or adjacent surfaces.
3. Protect adjacent surfaces not being cleaned from staining, deterioration, damage, or other detrimental effects caused by cleaning.
4. Arrange and pay costs for removing and replacing work that cannot be cleaned to the Architect's acceptance.

B. Waste Management: After completing the work of this specification section, leave work areas free from debris, waste, scrap, equipment, tools, and other items.

3.5 PROTECTION

A. Protect installed toilet accessories in place from soiling, deterioration, and damage until Substantial Completion.

B. Do not store anything on or adjacent to or against installed toilet accessories unless they are protected from damage, as accepted in writing by the manufacturer's representative. Do not use installed toilet accessories as work surfaces.

C. Remove protection when it's no longer needed and before Substantial Completion.

END OF SECTION

SECTION 10 44 00

FIRE PROTECTION SPECIALTIES

PART 1 - GENERAL

1.1 SUMMARY

A. Section Includes:
   1. Fire extinguishers.
   2. Fire extinguisher cabinets.
   3. Supplementary components and accessories normally furnished or necessary for a complete installation, whether or not such items are indicated on the Drawings or included in the Specifications.

1.2 REFERENCES

A. Definitions:
   1. Manufacturer: Means the fire protection specialty manufacturer, unless otherwise indicated.

1.3 ADMINISTRATIVE REQUIREMENTS

A. Coordination:
   1. Coordinate size of fire extinguisher cabinets to ensure specified fire extinguishers and capacities are accommodated.
   2. Coordinate sizes and locations of fire protection specialty cabinets with wall depths.
   3. Final location of fire extinguisher cabinets is subject to fire marshal approval.
      a. Verify cabinet locations with both the fire marshal and the Architect during the framing stage of the project.
      b. Positioning of cabinets at locations other than where indicated are at no additional cost to the Owner.
   4. Where extinguishers are not indicated, assume cabinets and extinguishers are located within 75 feet of any point in the building, or at a rate of one for each 3,000 square feet of building area, or portion thereof, whichever yields the greater number of fire extinguishers.

1.4 SUBMITTALS

A. Action Submittals: Submit the following for responsive action (formal review and approval).
   1. Product Data: Submit manufacturer's product data, specifications, typical installation details, and all other information necessary to show conformance to the Contract

   Documents, excluding material safety data sheets (MSDSs), which are returned to the Contractor without review or responsive action.
   2. Shop Drawings:
      a. Submit dimensioned plans and elevations drawn to scale and showing fire protection specialty locations, sizes, and extents of all items, accessories, and

trim. Label manufactured items by product name.

b. Include project-specific dimensioned details drawn to scale showing conditions not detailed on the product data; or that are detailed, but not in a manner specific to the project. Cross-reference details to plans and elevations.

B. Informational Submittals: Submit manufacturer's instructions for information (informal review: responsive action not expected or required, except to record non-conformance with submittal requirements).

1. Submit manufacturer-prepared published instructions for proper installation of furnished fire protection specialties.
2. If manufacturer's instructions are unavailable or do not apply to specific project conditions, then consult the manufacturer's representative and obtain project-specific supplemental instructions printed on manufacturer's letterhead.
3. Promptly distribute supplemental instructions to the Architect, who may have comments that lead to contract modifications or minor changes in the work.

1.5 QUALITY ASSURANCE

A. Source Limitations:

1. Fire protection specialties must be obtained through one source from the same manufacturer (to ensure compatibility, regulatory conformance, and a warrantable installation).
   a. Certain items may be obtained from more than one manufacturer, but only when used for separate installations.
   b. Items provided for each different installation must be obtained from the same source and manufacturer.
2. Provide secondary materials, components, accessories and other items from sources required, recommended, or accepted by the primary manufacturer for actual in- service conditions applicable to the project.

B. Regulatory Requirements:

1. Mounting Height: When installed within the cabinet, bracket-mounted extinguisher handles height must conform to the prescribed limits for an ADA-accessible front-approach reach.
2. UL Listing:
   a. Provide UL-listed fire extinguishers bearing the UL listing mark for type, fire classification, and rating specified.
   b. Provide cabinets with the same fire rating as wall in which they are installed.

1.6 HANDLING

A. Receiving: Inspect all deliveries for deteriorated, damaged, and defective items.

1. Reject items that are not packaged in a manner that prevents damage; or that exhibit deterioration or damage or have damaged or open packaging or containers.
2. Reject items that are not transported, delivered, or protected in conformance with manufacturer-recommended transport, delivery, and receiving requirements.
3. Unload and store only inspected and accepted items.

B. Storage: Store unloaded items indoors as shipped, upright in their original packaging or containers, within dry, well-ventilated, broom-cleaned and enclosed storage areas.

C. Handling: Handle items in conformance with manufacturer's instructions and other requirements and recommendations, and in a manner that that prevents damage. Avoid damage to packaging and containers, and contamination of contents.

D. Damaged Item Replacement: Promptly remove and replace deteriorated, damaged, or defective fire protection specialties with undamaged new fire protection specialties that do not exhibit deterioration, damage, or defects.

E. Packaging Waste Management: Do not burn or bury construction waste at the project site. Remove and legally dispose of all construction waste away from the project site.

PART 2 - PRODUCTS

2.1 MANUFACTURERS

A. Manufacturers: Provide products manufactured by one of the following, or equal.
   1. Activar Construction Products Group, Inc. (JL Industries).
   2. Larsen's Manufacturing Co.

2.2 FIRE EXTINGUISHERS

A. Description: UL-listed, multi-purpose chemical portable fire extinguishers conforming to NFPA 10 requirements for portable extinguishers, and bearing the UL listing mark for type, fire classification, and rating specified.

B. Product:
   1. Product: "Cosmic 5E", multi-purpose dry chemical extinguishers manufactured by JL Industries, or equal.
      a. Capacity: 5 lbs.
      b. UL Rating: 3A:40B:C.
      c. Mounting Bracket: MB 818C with chrome strap: .
   d. Overall Diameter: Not more than 41/4 inches.

2.3 FIRE EXTINGUISHER CABINETS

A. Description: Fire extinguisher cabinet, non-rated.

B. Product:.
   1. "Cosmopolitan" manufactured by JL Industries, or equal,Model: "8136-V-10-PRH".
   2. Material: #4 stainless steel door and trim, rolled steel tub.
   3. Door:
      a. Door Style: Vertical Duo.
      b. Glazing: Clear Acrylic.
      c. Letters: None.
   4. Trim: Semi-Recessed.
      a. Maximum 1-1/2" projection.
   5. Rough Opening Size: Maximum 4-1/8" depth.
   6. Door Hardware: Flush Pull Handle.

PART 3 - EXECUTION

3.1 EXAMINATION

A. Oversight: Ensure an adequate number of supervisors are present and proper supervision practices are followed at the project site before the installer begins work and at all times during installation.

B. Verification: Verify in-place supporting and adjacent construction conforms to the manufacturer's requirements or recommendations and satisfies all other conditions that might affect the quality of installation or the durability, appearance, or performance of installed and adjacent items.

C. Evaluation and Assessment:

1. Identify project conditions that do not conform to the manufacturer's instructions and other requirements and recommendations.
2. Perform or arrange and pay costs for all remedial work necessary to correct or improve deficient conditions, without limitation, before the installer begins work.

3.2 INSTALLATION

A. General Requirements:

1. Install fire protection specialties using materials and methods required, recommended, or accepted by the manufacturer, along with manufacturer-recommended accessories and techniques.
2. Set items true to line, to required levels and lines, and plumb, level, and square, without warp or rack, with flush well-fitted joints, and in alignment with adjacent construction
3. Installed fire protection specialties must be warrantable. Do not install, correct, or replace fire protection specialties in a manner that results in any warranty or guarantee becoming void.

B. Interface with Adjacent Items: Provide materials, components, and accessories normally furnished or necessary to securely attach fire protection specialties to supporting construction.

C. Installation Tolerances: Install fire protection specialties to an allowable tolerance variation of not more than 1/4-inch from true position and not more than 1/8-inch from plumb, level, and alignment.

3.3 ADJUSTING

A. Verify smooth and quiet fire protection specialty door and hardware operation.

B. Lubricate and adjust operating parts and hardware to function properly, free from warp, twist, binding, and distortion. Confirm latches and locks engage securely without forcing or binding.

C. Replace items that do not operate freely in a safe and reliable manner.

3.4 CORRECTION AND REPAIR

A. Non-conforming, damaged, and defective work must be brought into conformance with the Contract Documents. Correct and repair as necessary, without limitation, including arranging all correction and repair work and paying all correction and repair costs, until accepted in writing by the Architect.

B. Corrective and repair work must be performed in conformance with a correction and repair plan submitted to and accepted in writing by the Architect before correction or repair work begins. At a minimum, correction and repair plans must include

1. written descriptions of non-conforming, damaged, and defective work;
2. supporting sketches, diagrams, photographs, and other visual depictions of non-conforming, damaged, and defective work; and
3. similar written descriptions and visual depictions of Contractor-proposed corrections and repairs.

3.5 CLEANING

A. Cleaning Work: Clean all visible fire protection specialty surfaces in a manner that does not result in any warranty or guarantee becoming void.

1. Use cleaning materials, equipment, and accessories supplied, and means, methods, techniques, and procedures required, recommended, or accepted by the manufacturer.
2. Do not use cleaning materials or procedures known to change, or that might change, the appearance of exposed finishes or adjacent surfaces; or cause deterioration or damage to exposed finishes or adjacent surfaces.
3. Protect adjacent surfaces not being cleaned from staining, deterioration, damage, or other detrimental effects caused by cleaning.
4. Arrange and pay costs for removing and replacing work that cannot be cleaned to the Architect's acceptance.

3.6 PROTECTION

A. Protect installed fire protection specialties in place from soiling, deterioration, and damage until Substantial Completion.

B. Do not store anything on or adjacent to or against installed fire protection specialties unless they are protected from damage, as accepted in writing by the manufacturer's representative. Do not use installed fire protection specialties as work surfaces.

C. Remove protection when it's no longer needed and before Substantial Completion.

END OF SECTION

SECTION 10 51 13
METAL LOCKERS

PART 1 - GENERAL

1.1 SUMMARY

A. Section Includes

1. Knocked-down, quiet metal lockersS

1.2 DEFINITIONS

A. Uncoated Steel Sheet Thicknesses: Indicated as the minimum thicknesses.

1.3 SUBMITTALS

A. Product Data: Include construction details, material descriptions, dimensions of individual components and profiles, and finishes for each type of metal locker.

B. Shop Drawings: Include plans, elevations, sections, details, and attachments to other work.

1. Show base, sloping tops and other accessories.
2. Include locker identification system.

C. Samples for Verification: For metal lockers and locker benches, in manufacturer's standard sizes.

1.4 QUALITY ASSURANCE

A. Installer Qualifications: An authorized representative of metal locker manufacturer for installation and maintenance of units required for this Project.

B. Source Limitations: Obtain metal lockers and accessories through one source from a single manufacturer.

C. Product Options: Drawings indicate size, profiles, and dimensional requirements of metal lockers and are based on the specific system indicated. Refer to Section 01- 01600, "Product Requirements."

1. Do not modify intended aesthetic effects, as judged solely by Agency's Representative, except with Agency Representative's approval. If modifications are proposed, submit comprehensive explanatory data to Agency's Representative for review.

D. Regulatory Requirements: Where metal lockers are indicated to comply with accessibility requirements, comply with the U.S. Architectural & Transportation Barriers Compliance Board's "Americans with Disabilities Act (ADA), Accessibility Guidelines for Buildings and Facilities (ADAAG)."

1. Provide hardware that does not require tight grasping, pinching, or twisting of the wrist, and that operates with a force of not more than 5 lbf.

1.5 DELIVERY, STORAGE, AND HANDLING

A. Do not deliver metal lockers until spaces to receive them are clean, dry, and ready for metal locker installation.

1.6 PROJECT CONDITIONS

A. Field Measurements: Verify the following by field measurements before fabrication and indicate measurements on Shop Drawings:

1. Concealed framing, blocking, and reinforcements that support metal lockers before they are enclosed.
2. Recessed openings.
3. Established Dimensions: Where field measurements cannot be made without delaying the Work, establish recessed opening dimensions and proceed with fabricating metal lockers without field measurements. Coordinate wall and floor construction to ensure that actual recessed opening dimensions correspond to established dimensions.

1.7 COORDINATION

A. Coordinate sizes and locations of framing, blocking, furring, reinforcements, and other related units of Work specified in other Sections to ensure that metal lockers can be supported and installed as indicated.

1.8 WARRANTY

A. Refer to the General Conditions for terms of the Contractor's special warranty of workmanship and materials. General closeout requirements are included in Section "Project Closeout."

B. Special Warranty: Manufacturer agrees to repair or replace components of metal lockers that fail in materials or workmanship, excluding finish, within specified warranty period.

1. Failures include, but are not limited to, the following:
   a. Structural failures.
   b. Faulty operation of latches and other door hardware.
2. Damage from deliberate destruction and vandalism is excluded.
3. Warranty Period for Knocked-Down Metal Lockers: Two years from date of Substantial Completion.

C. Installer shall warrant installation for 1 year.

PART 2 - PRODUCTS

2.1 MATERIALS

A. Cold-Rolled Steel Sheet: ASTM A 1008, Commercial Steel (CS) Type B, suitable for exposed applications.

B. Fasteners: Zinc- or nickel-plated steel, slotless-type exposed bolt heads, and self-locking nuts or lock washers for nuts on moving parts.

C. Anchors: Select material, type, size, and finish required for secure anchorage to each substrate.

1. Provide nonferrous-metal or hot-dip galvanized anchors and inserts.
2. Provide toothed stainless steel expansion sleeves for drilled-in-place anchors.

D. Basis of Design:

1. Lyon (800-323-0082, www.lyonmetal.com).

E. Other acceptable manufacturers subject to compliance with requirements:

1. DeBourgh Mfg. Co. (800-328-8829, www.debourgh.com)
2. Pennco (800-562-1000, www.penncoproducts.com),
3. Republic (800-477-1255, www.republicstorage.com),

2.2 KNOCKED-DOWN, QUIET METAL LOCKERS

A. Locker Configurations and Arrangement as shown on drawings:

1. 4-Tier Lockers.

a. Color to be selected from Manufacturer's standard colors.

B. Body: Assembled by riveting or bolting body components together. Fabricate from unperforated, cold-rolled steel sheet with thicknesses as follows:

1. Tops, Bottoms, and Intermediate Dividers: 0.0209 inch, with single bend at sides.
2. Backs and Sides: 0.0209 inch thick, with full-height, double-flanged connections.

3. Shelves: 0.0209 inch thick, with double bend at front and single bend at sides and back.

C. Frames: Channel formed; fabricated from 0.0528-inch- thick, cold-rolled steel sheet; lapped and factory welded at corners; with top and bottom main frames factory welded into vertical main frames. Form continuous, integral door strike full height on vertical main frames.

1. Cross Frames between Tiers: Channel formed and fabricated from same material as main frames; welded to vertical frame members.
2. Frame Vents: Fabricate face frames with vents.

D. Doors: One-piece; fabricated from 0.0528-inch- thick, cold-rolled steel sheet; formed into channel shape with double bend at vertical edges, and with right-angle single bend at

horizontal edges.

1. Doors less than 12 inches wide may be fabricated from 0.0428-inch- thick, cold-rolled steel sheet.
2. Reinforcement: Manufacturer's standard reinforcing angles, channels, or stiffeners for doors more than 15 inches wide; welded to inner face of doors.
3. Stiffeners: Manufacturer's standard full-height stiffener fabricated from 0.0428-inch- thick, cold-rolled steel sheet; welded to inner face of doors.
4. Sound-Dampening Panels: Manufacturer's standard, designed to stiffen doors and reduce sound levels when doors are closed, of die-formed metal with full perimeter flange and sound-dampening material; welded to inner face of doors.
5. Door Style: Unperforated panel.
   a. Concealed Vents: Slotted perforations in top and bottom horizontal return flanges of doors.

E. Hinges: Self-closing; welded to door and attached to door frame with not less than 2 factory-installed rivets per hinge that are completely concealed and tamper resistant when door is closed; fabricated to swing 180 degrees.

1. Knuckle Hinges: Steel, full loop, 5 or 7 knuckles, tight pin; minimum 2 inches high. Provide not less than 3 hinges for each door more than 42 inches high.
2. Continuous Hinges: Manufacturer's standard, steel continuous hinge.
3. Hinges: Manufacturer's standard, steel continuous or knuckle type.

F. Recessed Door Handle and Latch: Stainless-steel cup with integral door pull, recessed so locking device does not protrude beyond face of door; pry resistant.

1. Multipoint Latching: Finger-lift latch control designed for use with built-in combination locks, built-in key locks, or padlocks; positive automatic and prelocking.

   a. Latch Hooks: Equip doors 48 inches and higher with 3 latch hooks and doors less than 48 inches high with 2 latch hooks; fabricated from minimum 0.0966-inch- thick steel; welded or riveted to full-height door strikes; with resilient silencer on each latch hook.
   b. Latching Mechanism: Manufacturer's standard rattle-free latching mechanism and moving components isolated with vinyl or nylon to prevent metal-to-metal contact, and incorporating a prelocking device that allows locker door to be locked while door is open and then closed without unlocking or damaging lock or latching mechanism.

G. Padlocks: Provide hasp preparation for Owner provided padlock.

H. Equipment: Equip each metal locker with identification plate and the following, unless otherwise indicated:

1. Provide one stainless steel double coat hook and two stainless steel single prong side hooks for each opening at lockers.

I. Accessories:

1. Continuous Base: Fabricated from cold-rolled steel sheet, manufacturer's standard thickness, but not less than 0.0528 inch thick.
   a. Height: 4 inches.
2. Continuous Sloping Tops: Fabricated from cold-rolled steel sheet, manufacturer's standard thickness, but not less than 0.0329 inch thick.
   a. Closures: Hipped-end type.

b. Sloped top corner fillers, mitered.

3. Finished End Panels: Fabricated from 0.0209-inch- thick, cold-rolled steel sheet.

J. Finish: Powder coat.

1. Color(s): Custom color to match Agency's Representative's sample.

2.3 FABRICATION

A. General: Fabricate metal lockers square, rigid, and without warp; with metal faces flat and free of dents or distortion. Make exposed metal edges free of sharp edges and burrs, and safe to touch.

1. Form body panels, doors, shelves, and accessories from one-piece steel sheet, unless otherwise indicated.
2. Provide fasteners, filler plates, supports, clips, and closures as required for a complete installation.

B. Unit Principle: Fabricate each metal locker with an individual door and frame; individual top, bottom, and back; and common intermediate uprights separating compartments.

C. Knocked-Down Construction: Fabricate metal lockers for nominal assembly at Project site using nuts, bolts, screws, or rivets. Factory weld frame members together to form a rigid, one-piece assembly.

D. Hooks: Manufacturer's standard ball-pointed type, aluminum or steel; zinc plated.

E. Identification Plates: Manufacturer's standard etched, embossed, or stamped plates; with numbers and letters at least 3/8 inch high.

F. Continuous Base: Formed into channel or Z profile for stiffness, and fabricated in lengths as long as practicable to enclose base and base ends of metal lockers; finished to match lockers.

G. Continuous Sloping Tops: Fabricated in lengths as long as practicable, without visible fasteners at splice locations; finished to match lockers.

1. Sloped top corner fillers, mitered.

H. Finished End Panels: Designed for concealing unused penetrations and fasteners, except for perimeter fasteners, at exposed ends of nonrecessed metal lockers; finished to match lockers.

1. Provide one-piece panels for double-row (back-to-back) locker ends.

2.4 STEEL SHEET FINISHES

A. General: Comply with NAAMM's "Metal Finishes Manual for Architectural and Metal Products" for recommendations for applying and designating finishes.

B. Factory finish steel surfaces and accessories except stainless-steel and chrome-plated surfaces.

C. Surface Preparation: Clean surfaces of dirt, oil, grease, mill scale, rust, and other contaminants that could impair paint bond. Use manufacturer's standard methods.

D. Powder-Coat Finish: Immediately after cleaning and pretreating, electrostatically apply manufacturer's standard baked-polymer thermosetting powder finish. Comply with resin manufacturer's written instructions for application, baking, and minimum dry film thickness.

PART 3 - EXECUTION

3.1 EXAMINATION

A. Examine walls, floors, and support bases, with Installer present, for compliance with requirements for installation tolerances and other conditions affecting performance of work.

1. For the record, prepare written report, endorsed by Installer, listing conditions detrimental to performance of work.

B. Proceed with installation only after unsatisfactory conditions have been corrected.

3.2 INSTALLATION

A. General: Install level, plumb, and true; shim as required, using concealed shims.

1. Anchor locker runs at ends and at intervals recommended by manufacturer, but not more than 36 inches o.c. Install anchors through backup reinforcing plates, channels, or blocking as required to prevent metal distortion, using concealed fasteners.
2. Anchor single rows of metal lockers to walls near top and bottom of lockers.
3. Anchor back-to-back metal lockers to floor.

B. Knocked-Down Metal Lockers: Assemble knocked-down metal lockers with standard fasteners, with no exposed fasteners on door faces or face frames.

C. Equipment and Accessories: Fit exposed connections of trim, fillers, and closures accurately together to form tight, hairline joints, with concealed fasteners and splice plates.

1. Attach hooks with at least two fasteners.
2. Attach door locks on doors using security-type fasteners.
3. Identification Plates: Identify metal lockers with identification indicated on Drawings.
   a. Attach plates to each locker door, near top, centered, with at least two aluminum rivets.
4. Attach sloping top units to metal lockers, with closures at exposed ends.
5. Attach finished end panels with fasteners only at perimeter to conceal exposed ends of nonrecessed metal lockers.

D. Fixed Locker Benches: Provide not less than 2 pedestals for each bench, uniformly spaced not more than 72 inches apart. Securely fasten tops of pedestals to undersides of bench tops, and anchor bases to floor.

3.3 ADJUSTING, CLEANING, AND PROTECTION

A. Clean, lubricate, and adjust hardware. Adjust doors and latches to operate easily without binding.

B. Protect metal lockers from damage, abuse, dust, dirt, stain, or paint. Do not permit metal

locker use during construction.

C. Touch up marred finishes, or replace metal lockers that cannot be restored to factory-finished appearance. Use only materials and procedures recommended or furnished by metal locker manufacturer.

END OF SECTION

SECTION 12 24 00

MANUAL WINDOW SHADES

PART 1 GENERAL

1.1 SECTION INCLUDES

A. Manually operated, roll-up fabric interior window shades including mounting and operating hardware.

1.2 REFERENCES

A. NFPA 701-99 - Fire Tests for Flame-Resistant Textiles and Films.

B. GREENGUARD Environmental Institute Gold.

C. ANSI/WCMA A100.1-2018.

1.3 SUBMITTALS

A. Submit under provisions of Division 01:

B. Product Data: Manufacturer's data sheets on each product specified, including:
1. Preparation instructions and recommendations.
2. Installation and maintenance instructions.
3. Styles, material descriptions, dimensions of individual components, profiles, features, finishes, and operating instructions.
4. Storage and handling requirements and recommendations.
5. Mounting details and installation methods.

C. Shop Drawings: Plans, elevations, sections, product details, installation details, operational clearances, and relationship to adjacent work.

D. Window Treatment Schedule: For all roller shades. Use same room designations as indicated on the Drawings, field verified window dimensions, quantities, type of shade, controls, fabric, and color, and include opening sizes and key to typical mounting details.

E. Selection Samples: For each finish product specified, one complete set of shade cloth options and aluminum finish color samples representing manufacturer's full range of available colors and patterns.

F. Maintenance Data: Methods for maintaining roller shades, precautions regarding cleaning materials and methods, instructions for operating hardware and controls.

G. Standard manufacturer’s defect warranty: Standard manufacturer’s warranty documents indicating compliance with requirements of Section 1.9 below.

H. Manufacturer's Certificates: Certify products meet or exceed specified requirements.

1.4 QUALITY ASSURANCE

A. Manufacturer Qualifications: Obtain roller shades through one source from a single manufacturer with a minimum of twenty years' experience in manufacturing products comparable to those specified in this section. If manufacturer does not meet minimum experience requirement, please submit life cycle test data showing minimum 2000 complete operational cycles for each year of warranty showing no failure and that shade remains fit for use as an operable shade.

B. NFPA Flame-Test: Passes NFPA 701. Materials tested shall be identical to products proposed for use. Show complete manufacturer data (name, location, contact) and certification from manufacturer that the fabrics sourced for this project comply with the test data provided.

1.5 DELIVERY, STORAGE, AND HANDLING

A. Do not deliver window shades until building is enclosed and construction within spaces where shades will be installed is substantially complete.

B. Deliver products in manufacturer's original, unopened, undamaged containers with labels intact.

C. Label containers and shades according to Window Shade Schedule.

D. Store products in manufacturer's unopened packaging until ready for installation.

1.6 PROJECT CONDITIONS

A. Install roller shades after finish work and ambient temperature, humidity, and ventilation conditions are maintained at levels recommended for project upon completion.

1.7 WARRANTY

A. Hardware and Shade Fabric: Twenty-five-year limited warranty.

PART 2 PRODUCTS

2.1 MANUFACTURERS

A. Acceptable Manufacturer: Draper, Inc., which is located at: 411 S. Pearl P. O. Box 425; Spiceland, IN 47385-0425. ASD. Toll Free Tel: 800-238-7999; Tel: 765-987-7999; Fax: 866-637-5611; Web: www.draperinc.com.

2.2 MANUALLY OPERATED WINDOW SHADES

A. Manually Operated Window Shades with Independent Control: Manually operated, vertical roll-up, fabric window shade with components necessary for complete installation; Clutch-operated FlexShade® as manufactured by Draper, Inc., or approved equivalent.

1. Operation: Bead chain and clutch operating mechanism allowing shade to stop when chain is released. Provide limit stops to prevent shade from being raised or lowered too far.
    1) Clutch mechanism: Fabricated from high carbon steel and molded fiberglass reinforced polyester or injected molded nylon. White or Black color as selected by Architect.
    b. Bead chain loop: Stainless steel bead chain hanging at side of window.
    c. Idler Assembly: Provide roller idler assembly of molded nylon with adjustable or spring-loaded length idler pin to facilitate easy installation, and removal of shade for service.
    d. Bead Chain Hold Down: P-Clip.
2. Single Roller Configuration:
    a. Mounting:
        1) Universal Mounting brackets.
    b. Brackets: Plated stamped steel. Provide size compatible with roller size.
        1) Mounted to window frame.
        2) Finish: White.
3. Roller Tube: Fabricated from extruded aluminum, galvanized steel, or enameled steel. Diameter, wall thickness, and material selected by manufacturer to accommodate shade type and size. Minimum roller diameter 1.5 inches. Tube diameters less than 1.5 inches shall not be acceptable unless manufacturer provides deflection analysis showing deflection limited to <= width(inches)/700 at 1.5 X design load.
4. Fabric to tube attachments: LSE (low surface energy) double sided adhesive specifically developed to attach coated textiles to metal. Adhesive attachment to eliminate horizontal impressions in fabric.
5. Shade slat:
    a. Small flat exposed hem bar: 7/8 inch by 5/16 inch (22 mm by 8 mm) aluminum rectangular hem bar with plastic end caps.

2.3 FABRIC

A. Light-Filtering Fabrics
    1. PVC Coated Fiberglass
    Basketweave: SheerWeave® Series SW2500 by Phifer®: 500 denier fiberglass, vinyl coated and woven into a 2 x 2 basket weave. Fire rating: California U.S. Title 19 (small scale), NFPA 701 TM#1 (small scale), NFPA 101 (Class A Rating), IBC Section 803.1.1 (Class A Rating), BS 5867 Part 2 Type B Performance, NFPA 701 TM#2 (large scale), CAN/ULC-S 109 (large and small scale), CAN/CGSB2-4.162-M80. Bacteria and fungal resistance: ASTM E 2180, ASTM G21, ASTM G22, AATCC30 Part 3, ASTM D 3273, UL GREENGUARD® Mold and Bacteria Standard ASTM 6329; includes Microban® antimicrobial additives. Environmental certification: Certified to UL GREENGUARD and GREENGUARD Gold® standards for low chemical emissions into indoor air during product usage. Safe use: RoHS/Directive 2002/95/EC, US Consumer Product Safety Commission Section 101 and ANSI/WCMA A 100.1-2007 for lead content and REACH (EC 1907/2006) compliant. 1 percent open, .024 inches thick. 16.39 oz/square yard.

B. Color and pattern: As selected by Architect from manufacturer's standard range.

PART 3 EXECUTION

3.1 EXAMINATION

A. Do not begin installation until substrates have been properly prepared.

B. If substrate preparation is the responsibility of another installer, notify Architect of unsatisfactory preparation before proceeding.

3.2 PREPARATION

A. Coordinate requirements for blocking and structural supports to ensure adequate means for installation of window shades.

3.3 INSTALLATION

A. Install in accordance with manufacturer's instructions.

B. Install roller shades level, plumb, square, and true. Allow proper clearances for window operation hardware.

C. Position shades level, plumb, and at proper height relative to adjacent construction. Secure with fasteners recommended by manufacturer.

3.4 TESTING AND DEMONSTRATION

A. Test window shades to verify that operating mechanism and other operating components are functional. Correct deficiencies.

B. Demonstrate operation of shades to Owner's designated representatives.

3.5 PROTECTION

A. Protect installed products until completion of project.

B. Touch-up, repair, or replace damaged products before Substantial Completion.

3.6 SCHEDULES

A. Refer to Drawings for shade types and locations.

END OF SECTION

SECTION 14 42 16

VERTICAL PLATFORM WHEELCHAIR LIFT

PART 1 GENERAL

1.1 SECTION INCLUDES

A. Unenclosed, self-contained vertical platform wheelchair lift.

1.2 REFERENCES

A. ASME A17.1 - Safety Code for Elevators and Escalators.

B. ASME A17.5 - Elevator and Escalator Electrical Equipment.

C. ASME A18.1 - Safety Standard for Platform Lifts and Stairway Chairlifts.

D. ICC/ANSI A117.1 - Accessible and Usable Buildings and Facilities.

E. California Building Code.

F. California Electrical Code.

G. California Title 8.

1.3 SUBMITTALS

A. Submit under provisions of Division 1.

B. Product Data: Manufacturer's data sheets on each product to be used, including:
   1. Submit manufacturer’s installation instructions, including preparation, storage and handling requirements.
   2. Include complete description of performance and operating characteristics.

C. Shop Drawings:
   3. Show typical details of assembly, erection and anchorage.
   4. Include wiring diagrams for power, control, and signal systems.
   5. Show complete layout and location of equipment, including required clearances and coordination with shaftway.

D. Selection Samples: For each finished product specified, provide two complete sets of color chips representing manufacturer's full range of available colors and patterns.

E. Verification Samples: For each finished product specified, two samples, minimum size 1-3/4” x 2-1/4”, representing actual product, color, and patterns.

F. Manufacturer Qualifications: Firm with minimum 20 year’s experience in manufacturing of vertical platform wheelchair lifts, with evidence of experience with similar installations of type specified.

G. Installer Qualifications: Licensed to install equipment of this scope, with evidence of experience with specified equipment. Installer shall maintain an adequate stock of replacement parts, have qualified people available to ensure fulfillment of maintenance and callback service without unreasonable loss of time in reaching project site.

1.4 REGULATORY REQUIREMENTS

H. Provide platform lifts in compliance with:
1. ASME A18.1 - Safety Standard for Platform Lifts and Stairway Chairlifts.
2. ASME A17.1 - Safety Code for Elevators and Escalators.
3. ASME A17.5 - Elevator and Escalator Electrical Equipment.
4. California Building Code.
5. California Electrical Code.
6. California Title 8.

1.5 DELIVERY, STORAGE, AND HANDLING

I. Store products in manufacturer's unopened packaging until ready for installation.

J. Store components off the ground in a dry covered area, protected from adverse weather conditions.

1.6 PROJECT CONDITIONS

K. Do not use wheelchair lift for hoisting materials or personnel during construction period.

1.7 WARRANTY

L. Warranty: Manufacturer shall warrant the wheelchair lift materials and factory workmanship for two years following completion of installation.

M. Extended Warranty: Provide an extended manufacturer’s warranty for the entire warranty period covering the wheelchair lift materials and factory workmanship for the following additional extended period beyond the initial two-year warranty. Preventive Maintenance agreement required.
1. Five additional years.

PART 2 PRODUCTS

2.1 MANUFACTURERS

A. Acceptable Manufacturer: Garaventa Lift;
United States - P.O. Box 1769, Blaine, WA 98231-1769.
Canada – 18920 – 36th Ave., Surrey, BC V3Z 0P6. ASD.
Toll Free: 800-663-6556. Tel: (604) 594-0422. Fax: (604) 594-9915.
Email: productinfo@garaventalift.com Web www.garaventalift.com

B. Requests for substitutions will be considered in accordance with provisions of Division 1.

2.2 UNENCLOSED VERTICAL WHEELCHAIR LIFT

A. Capacity: 750 lbs (340 kg) rated capacity.

B. Mast Height:
   1. Model GVL-OP-42; 45 inches (1143 mm) maximum lifting height.

C. Platform Size and Nominal Clear Platform Dimensions:
   2. Large: 43-1/4 inches (1100 mm) by 60-7/8 inches (1546 mm) clear platform dimensions.

D. Platform Configuration:
   3. Straight Through: Front and rear openings.

E. Landing Openings: Gates shall be self closing type.
   4. Gate Height: 42-1/8 inches (1070 mm).
   5. Platform Gate: Travels with platform and opens at lower landing.
   6. Upper Landing Gate: Installed at upper landing.

F. Power Gate Operators:
   7. Location:
      a. Platform Gate: Travels with platform and opens lower landing.
      b. Upper Landing Gate.
   8. Automatically opens the gate when platform arrives at a landing. Will also open at landing by pressing call button.
   9. ADA Compliant and obstruction sensitive.
   10. Low voltage, 24 VDC with all wiring concealed.

G. Lift Components:
   11. Machine Tower: Aluminum extrusion.
   12. Base Frame: Structural steel.
   13. Platform Side Wall Panels: 16 gauge (1.5 mm) galvanized steel sheet.
   14. Side Guard Panels: 42-1/8 inches (1070 mm) high mounted on platform.
   15. Outdoor Protection: Lift shall include modifications recommended by manufacturer for reliable performance in outdoor climate of project site.

H. Base Mounting at Lower Landing:
   16. Pit Mount: Lift to be mounted in pit with dimensions to meet manufacturer's requirements for the platform size specified. Pit construction shall be in accordance to Section 03300.

I. Hydraulic Drive:
   17. Drive Type: Chain hydraulic.
   18. Emergency Operation: Manual device to lower platform and battery auxiliary power to raise or lower platform.
   19. Safety Devices:
      a. Slack chain safety device.
      b. Shoring device.
   20. Travel Speed: 17 fpm (5.2 m/minute).
   21. Motor: 3.0 hp (2.2 kW); 24 volts DC.
   22. Power Supply:
      a. 120 VAC single phase; 60 Hz on a dedicated 15-amp circuit.
      b. Powered by continuous building mains converted to 24 VDC, equipped with auxiliary power system capable of running lift up and down for a minimum of 5 trips with rated load.

J. Platform Controls: 24 VDC control circuit with the following features.
   23. Direction Control: Continuous pressure rocker switch.
   24. Illuminated and audible emergency stop switch shuts off power to lift and activates audio alarm with battery backup.
   25. Keyless operation.

K. Call Station Controls: 24 VDC control circuit with the following features.
   26. Direction Control:
      a. Illuminated tactile and continuous pressure elevator-style buttons with dual platform courtesy lights and safety light.
   27. Keyless operation.
   28. Call Station Mounting:
      a. Lower:
         1) Wall mounted surface.
      b. Upper:
         1) Wall mounted surface.

L. Safety Devices and Features:
   29. Grounded electrical system with upper, lower, and final limit switches.
   30. Tamper resistant interlock to electrically monitor that the gate is in the closed position and the lock is engaged before lift can move from landing.
   31. Pit stop switch mounted on mast wall.
   32. Electrical disconnect shall shut off power to the lift.
   33. Under platform safety pan with five waterproof safety switches to detect obstruction under platform.

M. Finishes
   34. Extruded aluminum electrostatically applied baked powder finish, semi matte Silver Moon.
   35. Ferrous Components: Electrostatically applied baked powder finish, semi matte.
      a. Color: Silver Moon.

PART 3 EXECUTION

3.1 EXAMINATION

A. Do not begin installation until substrates have been properly prepared.

B. Verify shaft and machine space are of correct size and within tolerances.

C. Verify required landings and openings are of correct size and within tolerances.

D. Verify electrical rough-in is at correct location.

E. If substrate preparation is the responsibility of another installer, notify Architect of unsatisfactory preparation before proceeding.

3.2 PREPARATION

A. Clean surfaces thoroughly prior to installation.

B. Prepare surfaces using the methods recommended by the manufacturer for achieving the best result for the substrate under the project conditions.

3.3 INSTALLATION

C. Install platform lifts in accordance with applicable regulatory requirements including ASME A17.1, ASME A18.1 and the manufacturer's instructions.

D. Install system components and connect to building utilities.

E. Accommodate equipment in space indicated.

F. Startup equipment in accordance with manufacturer’s instructions.

G. Adjust for smooth operation.

3.4 FIELD QUALITY CONTROL

A. Perform tests in compliance with ASME A17.1 or A18.1 and as required by authorities having jurisdiction.

B. Schedule tests with agencies and Architect, Owner, and Contractor present.

3.5 PROTECTION

A. Protect installed products until completion of project.

B. Touch-up, repair or replace damaged products before Substantial Completion.

END OF SECTION

SECTION 22 42 23

PREFABRICATED SHOWERS

PART 1 GENERAL

1.01 SECTION INCLUDES

A. Prefabricated 1-piece acrylic shower enclosure.

B. Shower accessories integral to the shower enclosure.

C. Related Requirements:

1. 2010 ADA Standards for Accessible Design
2. California Building Code, Title 24 Part 2

1.02 SUBMITTALS

A. Submit as specified in specification Division 01.

B. Product Data: Provide data sheet for shower, including all accessories.

C. Manufacturer's Installation Instructions.

1.03 QUALIFICATIONS

A. Manufacturer: Company specializing in the manufacture or products specified in this Section with minimum five year documented experience.

B. Installer: Company specializing in performing the work of the Section with minimum five years documented experience and approved by manufacturer.

1.04 HANDLING

A. Inspect all deliveries for deteriorated, damaged, or defective items. Reject any items that upon inspection are damaged or not in manufacturer’s original packaging.

B. Store items upright in a dry well ventilated and dust free environment.

1.05 SEQUENCING

A. Schedule delivery of showers to jobsite to avoid prolonged on-site storage.

B. Sequence work to ensure showers are not installed until they can be appropriately protected from other work. Install units when all possible overhead work has been completed.

C. Coordinate work with installation of floor and wall finishes.

PART 2 PRODUCTS

2.01 MANUFACTURERS

A. Aquatic, a division of American Bath Company, or equal.

2.02 PREFABRICATED SHOWERS

A. Aquatic model #16030BFSC.

1. One-piece prefabricated shower with smooth acrylic finish, color white.

2. 60” x 30” clear interior dimensions

3. Maximum 1/4” high skirt with vertical face at floor, maximum 1/2” high beveled threshold above skirt.

4. Slip resistant textured bottom conforming to ASTM F-462.

B Factory-supplied accessories

1. ADA-compliant stainless steel grab bars on side wall and back wall.

2. Phenolic white L-shaped fold-up seat.

3. Soap dish

4. Brass drain

PART 3 EXECUTION

3.01 EXAMINATION

A. Examine floors for suitable conditions; floor surface shall be flat and level where showers will be installed. Examine walls for suitable conditions, including coordination of thicknesses of final wall finish.

B. Examine plumbing rough-ins to verify locations of piping connections.

C. Beginning of installation signifies acceptance of existing conditions.

3.02 INSTALLATION

A. Install shower units in strict conformance with manufacturer’s printed installation instructions.

B. Install showers level and plumb. Make connections to specified fixtures from plumbing rough-ins.

C. Seal all penetrations through walls and floor of shower with white silicone sealant. Seal joints between edge of showers and adjacent finishes with clear silicone sealant.

3.03 ADJUSTMENT

A. Inspect, operate, and adjust showers, control valve and handheld sprayhead, and accessories. Replace any damaged or malfunctioning components. Adjust water pressure at controls for proper flow.

3.04 CLEANING AND PROTECTION

A. Clean showers, controls, fittings, and accessories with manufacturer's recommended cleaning methods and products.

B. Provide protective covering for shower and all installed fitting to prevent damage. Protective covering shall prevent access to shower; do not place or store any materials in shower before or after installation.

END OF SECTION

SECTION 27_1000 - STRUCTURED CABLE SYSTEM

PART 1- GENERAL

1.1 GENERAL WORK DESCRIPTION

A. The Contractor shall furnish and install rough-in and raceway for a certified structured cabling system (hereinafter referred to as the “SCS”), as specified herein and as shown on the contract Low Voltage Drawings.

B. The system shall be Contractor furnished / Contractor installed.

C. The SCS shall consist of copper and optical fiber station cable and hardware connecting between work area outlets and telecommunication rooms (i.e. TRs), copper and optical fiber cable and hardware connecting TRs to the HRW main building communication closet (i.e. MDF), and copper and optical fiber cable and hardware connecting the HRW to existing MPOE in the Emergency Generator Building and existing Data Center in the Lab Building.

D. The Contractor shall provide a turnkey installation including all hardware, outlets, jacks, faceplates, station cable, riser cable, patch panels, termination blocks, equipment racks, wire management, ladder rack, labeling, connectors, couplers, sleeves, fire stop sealant, and other miscellaneous installation materials and labor as necessary for a complete, tested and certified structured cabling system.

E. Station cable shall include unshielded twisted pair copper cable.

F. Riser cable shall include multi-pair copper, single mode fiber optic, and multimode fiber optic cables.

G. All cable shall be properly rated for the environment where installed.

H. The work includes only the passive elements of the voice/data network.

I. All active elements including hubs, routers, switches, file servers, power supplies, PC’s, terminals, printers, telephone switching equipment, telephone terminal equipment, telephone instruments, patch cords, jumper cables, etc. will be provided and installed by others.

J. Installation of the structured cabling system will occur simultaneously with building construction, and with installation of numerous other systems including several that will rely on the SCS for connectivity.

K. The Contractor shall coordinate work activities and schedule with other trades, and with the owner to assure on time project completion.

L. The structured cabling system installation shall comply with all applicable codes, standards, and regulations including, but not limited to ANSI, BICSI, EIA/TIA, FCC, IEEE, NFPA, OSHPD, UL, ISO/IEC, state and local codes.

M. Any hardware, cable, accessories or other miscellaneous materials or wire not specified

herein, but necessary for a complete, installed, certified system shall be deemed a part of this specification and provided by the Contractor.

N. Manufacturers and models numbers mentioned herein are intended to establish a required level of performance and quality – not to limit competition. Approved manufacturers are as listed herein.

O. System design cabling standard shall include Category 6 data station cable.

1.2 SUBMITTALS

A. Refer to specification section 27-0500 paragraph 1.5 for submittal requirements.

1.3 QUALIFICATIONS

A. Manufacturer

1. The proposed hardware and cable manufacturer(s) shall have a minimum of seven (7) years' experience manufacturing and installing certified structured cabling systems and shall be ISO 9001 Certified.

B. Contractor

1. The Contractor shall be certified by the hardware and cable manufacturer(s) in all aspects of SCS design, installation and testing. The Contractor's project manager shall have a current BICSI RCDD certification.

C. Certification

1. The Contractor shall submit a letter of certification from the manufacturer of proposed products indicating the Contractor has completed training to install, test and certify the products in compliance with the manufacturer's certification and warranty requirements.

2. Terms and conditions of the manufacturer's warranty shall be submitted with the bid.

1.4 DEFINITIONS

A. The Structured Cabling System (SCS) shall be defined as all required materials including hardware, outlets, termination blocks, racks, cable management, patch panels, twisted pair copper, shielded copper, and fiber optic cable - installed and configured to provide computer data and voice connectivity from each outlet to the network file server, data switch, alarm terminal, or telephone demarcation point. Any miscellaneous materials and/or labor not specified herein, but required for a complete installation of the SCS shall be considered a part of these specifications and shall be provided.

1.5 CABLING AND BASIC REQUIREMENTS

A. Station Cable

1. All station cable including unshielded twisted pair (UTP), shielded multi- conductor cable, and/or fiber optic cable as shown on the Low Voltage Drawings.

B. Riser Cable

1. All riser cable including multiple pair copper and multiple strand fiber optic cables run vertically within the building between floors shall be riser rated.

C. Compliance

1. All cable shall comply with NFPA 13. All cable shall be plenum-rated unless the entire cable path in concealed areas is within conduit.

D. Cable Pathway

1. Placement of all data and voice cables shall be within conduit and/or appropriate hook system.
2. Hook system above accessible ceiling shall utilize HCAI-approved structural support, and shall be provided with capacity to accommodate the structured cabling system plus cable of other low voltage systems.
3. Cable run open above the finished ceiling shall be installed in a neat and orderly fashion run parallel or perpendicular to adjacent walls and supported on "J" hooks or other approved cable support devices.
4. Contractor shall furnish and install cable support devices as necessary at a maximum interval of 48 to 60 inches per TIA/EIA standards along the cable pathway.
5. Cable run open above finished ceiling shall be neatly bundled and secured using removable Velcro tie-wraps or plastic cable ties as approved by the cable manufacturer.
6. Cable shall be routed to avoid EMI/RFI interference from devices such as motors, transformers, ballast, relays, elevator equipment, and to avoid heat producing devices, sharp corners and other potentially harmful locations.

E. Hardware

1. Required hardware includes, but is not limited to, outlets, patch panels, equipment racks, termination blocks, connectors, couplers, fastening devices, wire management, cable ladder racks, labeling materials, miscellaneous hardware and tie-wraps, and any other materials and accessories required to comply with this specification.

1.6 GROUNDING AND BONDING

A. All grounding and bonding shall meet the National Electrical Code (NEC®) and BICSI requirements as well as any local codes that specify additional grounding and/or bonding requirements.

B. Bonding and Grounding –

1. Communication bonding and grounding shall be in accordance with the California Electrical Code and BICSI requirements.
2. Horizontal equipment shall be grounded in compliance with ANSI/NFPA 70 and local requirements and practices.
3. Horizontal equipment includes cross connect frames, patch panels and racks.
4. Horizontal equipment shall be grounded utilizing a #6-AWG or larger bonding conductor to grounding panels provided in each telecommunications room.

C. Bonding and grounding of outlet boxes, conduit, sleeves, and j-hook pathway shall be provided by the electrical contractor. Bonding and grounding of all equipment, patch panels, termination blocks, equipment racks, ladder rack, and other passive hardware within the telecommunication rooms (i.e TRs) shall be provided by the structured cabling system contractor.

1.7 WARRANTY

A. A minimum fifteen (15) year parts and labor warranty shall be provided for the structured cabling system.

B. Extended Product Warranty

1. The Contractor shall warrant the structured cabling system against all defects of products or workmanship, and shall guarantee that the SCS will exceed the specifications of ANSI/TIA/EIA-568-C.1, ANSI/TIA/EIA-568-C.2 (including B.2-1, SP-3727-AD1-TIA/EIA Category 6 Standard for Category 6 option), ANSI/TIA/EIA-568-C.3 and ISO/IEC IS 11801, exceed all the parameter performance requirements of above standards for cabling links/channels, that the installation will exceed the loss and bandwidth requirements of above standards for fiber links/channels, for a fifteen(15) year period from the date of acceptance.
2. The warranty shall apply to all passive SCS components.
3. The system warranty shall cover failure of the SCS to support all applications it was designed to support, as well as additional application(s) introduced in the future by recognized standards or user forums that use the TIA/EIA 568C or ISO/IEC IS 11801 component and link/channel specifications for cabling.
4. The extended warranty shall cover the repair or replacement of defective materials, and labor to diagnose failures and repair or replace defective materials.

C. System Certification

1. Upon successful completion of the installation and subsequent inspection, the customer shall be provided with a numbered certificate, from the manufacturing company, registering the installation and assuring the manufacturer's backing of the system warranty.
2. The structured cabling system assurance certification and warranty shall meet or exceed Avaya Systimax certification and warranty.

1.8 DESCRIPTION

A. Structured Cabling System

1. The Contractor shall furnish and install hardware, cable and accessories for a complete Structured Cabling System (SCS) as shown on the Low Voltage Drawings and specified herein.
2. The SCS system shall serve as a vehicle for transport of data and voice telephony signals throughout the network from designated Agency and telephone company demarcation points to outlets located at various workstations and other locations as indicated on the IT contract drawings and described herein.
3. The structured cabling system shall include station wiring between work station outlets and floor telecommunications rooms (TR's).
4. The Contractor shall coordinate structured cabling system installation with the Agency's IT and Telecommunications staff.
5. Bidders shall be responsible for inspecting cable pathways provided by others to assure proper accessibility is provided for installation, bonding and grounding.
6. All station cable shall be terminated on outlets at the work stations, on 48-port RJ45 patch panels in the TR's.
7. Multiple pair voice riser cable shall be terminated on termination blocks in TR's.
8. Fiber riser cable shall be terminated on fiber patch panels in TR's.
9. All cable, outlets, fiber patch panels, termination blocks, associated hardware, connectors, patch cords and equipment racks shall be furnished and installed by the Contractor as shown on the Low Voltage Drawings and specified herein.

B. Applications
   a. Application standards supported shall include, but not be limited to: IEEE 802.3, 10Base5, 10BASE-T, 100Base-T, 25/155 mbs ATM, IEEE 802.5, 4 Mbps, 16Mbps (328 ft [100m], and TP-PMD.
   b. Additionally, the SCS shall be capable of supporting evolving high-end applications such as Giga-bit Ethernet.

C. Data Equipment

1. Data network equipment, desktop equipment, patch cords and jumper cords will be furnished and installed by others.
2. The Contractor shall furnish and install wiring to, and patch panels and fiber termination equipment at the Agency furnished data equipment.
3. The Contractor shall furnish and install equipment racks for mounting Agency furnished data equipment as shown on the Low Voltage Drawings and specified herein.
4. Patch cords and device jumper cables (category 6 and fiber) will be furnished and installed by others.
5. Installation of data equipment and placement of patch cords shall be provided by others.

1.9 CONTRACTOR QUALIFICATIONS

A. Contractor Certification

1. Contractor must employ and assign a BICSI certified RCDD full time to this project during the bidding, engineering, installation and testing stages.
2. The Contractor selected for this project must be certified by the manufacturer of the approved products, must adhere to the manufacturer’s engineering, installation and testing procedures, and must furnish the approved products for the project.

B. Contractor Experience and Training

1. The Contractor shall be experienced in all aspects of this work and shall be required to demonstrate direct experience on recent systems of similar type and size.
2. The Contractor shall own and maintain tools and equipment necessary for successful installation and testing of optical fiber and Category 6 metallic premise distribution systems and have personnel who are adequately trained in the use of such tools and equipment.

C. Contractor Resume
   1. A resume of qualification shall be submitted with the Contractor's proposal indicating the following:
      a. A list of recently completed projects of similar type and size; provide project name, scope, completion date, contact name, and telephone number for each (emphasis should be placed on providing references for hospital construction projects).
      b. A list of test equipment proposed for use in verifying the installed integrity of proposed systems.
      c. Resumes for the Contractor's Project Manager and on-site installation supervisor(s) who will be assigned to this project.
      d. A list of technical product training attended by the Contractor’s staff who will be assigned to this project.
   2. Provide similar resume(s) for any sub-contractor(s) who will be assigned to this project

and provide a scope of work for each sub-contractor.

1.10 SPECIAL REQUIREMENTS FOR CABLE ROUTING AND INSTALLATION

A. Cabling
1. All communications cabling used throughout this project shall comply with the requirements as outlined in the California Electrical Code Article 800, NFPA 13, BICSI requirements, and any applicable codes.
2. All cabling shall bear appropriate markings for the environment in which they are installed.
3. The Contractor shall be responsible for confirming requirements for plenum or non-plenum cable in each area before installation.

B. Cable Pathway
1. Cable shall be placed in conduit or j-hook pathway wherever possible.
2. Cable shall be separated and bundled by function, and placed in separate sections of the j-hook pathway.
3. In suspended ceiling and raised floor areas where duct, j-hook pathways or conduit are not available, the Contractor shall bundle, in bundles of 50 or less, station wiring with plastic cable ties snug, but not deforming the cable geometry.
4. The cable bundling shall be supported via j hook pathway or other approved cable support hardware attached to the building structure and framework at a maximum interval of maximum of 48 to 60 inches to comply with TIA/EIA standards.
5. The Contractor shall adhere to the manufacturers' requirements for bend radius and pulling tension of all cables.

C. Fire Stopping
1. Sealing of openings between floors, through rated fire and smoke walls, through existing openings and those created by the Contractor for cable to pass through shall be the responsibility of the Contractor.
2. Sealing material and application of this material shall be accomplished in a manner that is acceptable to the local fire and building authorities having jurisdiction over this work.
3. Creation of such openings as are necessary for cable passage between locations as shown on the Low Voltage Drawings shall be the responsibility of the Contractor's work.
4. Any openings created by or for the Contractor and left unused shall also be sealed as part of this work.

D. Sleeves
1. Any openings created by or for the Contractor through rated fire and smoke walls shall be provided with a minimum 1" EMT sleeve.
2. Sleeves shall extend a minimum of six (6) inches on both sides of the fire or smoke wall and shall be fire stopped both inside and around the outside.

E. Contractor Responsibility
1. The Contractor shall be responsible for damage to any surfaces or work disrupted as a result of his work.
2. Repair of surfaces, including repainting, shall be included as necessary.

1.11 EXCEPTIONS

A. Any work external to the confines of this building as shown on the Low Voltage Drawings shall be governed by the provisions of this specification and the applicable drawings.

1.12 INSTALLATION

A. The system shall utilize a network of fiber optic, and unshielded twisted pair, riser, and station cables.

B. Cables and terminations shall be provided and located as shown and in the quantities indicated on the Low Voltage Drawings.

C. Fiber cables shall terminate on modular fiber patch panels and Fiber Distribution Centers (FDC's) located in all TR's, the MDF, and existing campus MPOE and Data Center.

D. All cables and terminations shall be identified at all locations.

E. All cables shall be terminated in an alpha-numeric sequence at all termination locations.

F. All copper cable terminations shall comply with, and be tested to TIA/EIA 568C.1/C.2-1 standards for Category 6 and/or Category 3 installations.

G. Available and unused pairs to the TR's shall be terminated and identified as spare at each location.

H. Station cables shall terminate on one gang modular wall plates at the work area outlet (i.e. WAO).

PART 2 – PRODUCTS

2.0 Approved Manufacturers

A. Approved Manufacturers
1. Contractor shall furnish and install structured cabling system as specified herein, with complete system certification and system warranty by a single manufacturer.
2. Systems that cannot be certified by a single manufacturer, or that carry warranties of multiple manufacturers will not be acceptable.
3. All cable and hardware shall be the standard (i.e. not custom built for this project) products of approved manufacturers.
4. Manufacturers and catalog numbers are listed herein to establish equipment and quality criteria and are not meant to limit competition.
5. Manufacturers for category 6 cable shall be Belden, Berktek, Commscope, Draka Molex, Mohawk, Nordx, or approved equal and shall meet the functional, technical, and performance requirements set forth herein.
6. Approved manufacturers for optical fiber cable shall be Commscope, Corning, Draka Molex, Nordx, or approved equal and shall meet the functional, technical, and performance requirements set forth herein.
7. Approved manufacturers for copper voice riser (ARMM) cable shall be Commscope, Draka Molex, Nordx, Essex, General or approved equal and shall meet the functional, technical, and performance requirements set forth herein.
8. Approved manufacturers for hardware shall be Draka Molex, Nordx, Ortronics, Panduit, Siemon, or approved equal and shall meet the functional, technical, and performance requirements set forth herein.
9. Approved manufacturers for data and ladder racks shall be Chatsworth, Homaco, B-Line, or approved equal and shall meet the functional, technical, and performance requirements set forth herein.
10. Approved manufacturers for system certification and warranty shall be Draka Molex, Nordx, Ortronics, Panduit, Siemon, or approved equivalent and shall meet the

functional, technical, and performance requirements set forth herein.

11. .All cable, hardware, miscellaneous materials or other work not specified herein but necessary for proper installation and certification of the system shall be deemed a part of these specifications.
12. Bidders shall indicate proposed materials manufacturer(s) in their bid.

2.1 WORK AREA OUTLETS

A. Outlets for Voice/Data

1. All communications outlets - except wall telephone outlets - shall consist of one gang modular outlet plates with 6 modular jack openings equipped as follows:
   a. Voice/data outlets [triangle symbol with numeral 4] – shall be equipped with four 8-pin modular category 6- RJ-45 jacks; RJ-45 configuration shall be 568A.
   b. All voice/data outlets serving wall telephone shall be RJ-45, flush mounted jack wall plates with Category 6 RJ-45 jack and instrument hanger posts.
   c. All unused ports shall be equipped with a modular blank dust cover.

2. Outlet Hardware
   a. Category 6 - RJ45 outlets shall be 8-position/ 8-conductor modular jacks with insulation displacement connection for 24 AWG copper cable.
   b. For voice/data outlets - provide removable color coded icon/application inserts for voice, data, and fiber jacks (colors to be determined).
   c. Provide voice icon inserts for 50% of RJ45 jacks, data icon inserts 50% of RJ45 jacks, and fiber icon inserts all fiber jacks.
   d. Provide 20% spare of each icon/application insert.
   e. Provide Commscope or approved equivalent ivory plastic faceplates.
   f. Provide Commscope or approved equivalent ICON inserts as required.
   g. Provide Commscope or approved equivalent blank opening covers as required.

3. All Category 6 outlets shall conform to TIA/EIA 568C.1 Commercial Building Telecommunications Cabling Standard, Horizontal Cable Section, and be UL LISTED 1863 and cUL C22.2 approved, and shall meet or exceed the following electrical and mechanical specifications:

4. Category 6 outlets shall conform to the following electrical specifications:
   a. ANSI/TIA/EIA-568-C.2-1 (SP-3727-AD1) TIA/EIA Category 6 Draft Standard category 6minimum requirements.
   b. Insulation resistance: 500 MW minimum
   c. Dielectric to withstand voltage 1,000 VAC RMS, 60 Hz minimum, contact-to- contact and 1,500 VAC RMS, 60 Hz minimum from any contact to exposed conductive surface.
   d. Contact resistance: 20 mW maximum
   e. Current rating: 1.5 A at 68° F(20°C) per IEC Publication 512-3, Test 5b.
   f. The following tables of requirements shall also be met (NEXT Loss and FEXT tested in both Differential and Common Mode):

Table 1:: Category 6 outlet performance requirement

Parameters	Margin over proposed category 6*	Performance @ 250 MHz*
NEXT Loss	0 dB	46 dB
FEXT	2 dB	37 dB
Insertion Loss (Attenuation)	30%	0.2 dB
Return Loss	4 dB	18 dB
LCL	-	40**

***** Values above 100 MHz is provided for information only, margin applicable to swept frequency range of 1-250 MHz. Not required for conformance testing. ****** Not industry specified at this time.

5. Mechanical Performance:
   a. Plug Insertion Life: 750 insertions
   b. Contact Force: 3.5 oz (99.2 g) minimum using FCC-Approved modular plug
   c. Plug Retention Force: 30 lb (133 N) minimum between modular plug and jack
   d. Temperature Range: -10° to 60°C.
6. Comply with FCC Part 68
7. Provide Commscope or approved equivalent category 6 RJ45 connectors as required.
8. Fiber Optic Connectors
   a. Provide Commscope or approved equivalent ST fiber optic connectors as required.
9. Labeling
   a. All outlets, patch panels, termination blocks, fiber shelves, fiber distribution centers and cables shall be clearly, permanently and uniformly labeled at both ends in accordance with EIA/TIA 606 standards.

2.2 STATION CABLE (HORIZONTAL)

A. Category 6 - 4 UTP Copper Twisted Pair Station Cable

1. Voice and data twisted pair copper cables shall be extended between outlet locations and associated TR's and consist of: category 6, 4 pair 24 awg, or two category 6, 4 pair 23 awg for data, and shall be terminated on the 8 pin RJ45 modular jacks provided at each outlet.
2. Cable jacket shall comply with NEC Article 800 for use as a plenum or non- plenum cable as required. The 4 pair UTP cable shall be UL® and c (UL®) Listed for plenum or non-plenum use as required.
3. All 4 pair Category 6 cables shall conform to TIA/EIA 568C.1/B.2 Commercial Building Telecommunications Cabling Standard, Horizontal Cable Section, and be certified by UL®.
4. Applications standards supported should include, but be not limited to, IEEE 802.3, 1Base5, 10BASE-T; IEEE 802.5, 4 Mbps, 16Mbps (328 ft [100m], and TP-PMD. In addition, these cables shall be capable of supporting evolving high-end applications such as 1000 Base -T and 52/155 Mbps ATM, and shall meet or exceed the electrical and mechanical specifications listed below:
   a. Maximum DC resistance: 28.6 Ω/1,000 ft (9.4 Ω/100 meters)
   b. Maximum DC resistance unbalance: 5%
   c. Maximum Mutual Capacitance @ 1 kHz: 14pF/1000 ft (4.6 nF/100m)
   d. Maximum Capacitance Unbalance (pair to ground): 400pF/1,000 ft (131.2 pF/100m)
   e. Characteristic Impedance: 100 Ω ± 15 Ω from 1-350 Mhz
   f. Maximum outside diameter: .24 in

g. Weight: 21.6 lb. /1000 ft
h. All common conductors shall be manufactured with co-extruded stripes for identification purposes.
j. Cable shall have a test report listing values for Return Loss, Attenuation, Crosstalk, Master Reel number, and Characteristic Impedance attached to each box/reel.
k. The 4 pair UTP cable shall meet the Worst Case performance requirement in the following tables (typical or average performance will not be accepted).

Table 2: Category 6 UTP (Worst Case) Specification Requirement

Frequency	100 (MHz)	200 (MHz)	400 (MHz)
Attenuation (dB)	19.7	28.8	42.7
NEXT (dB)	45.3	40.8	36.3
PS NEXT (dB)	43.3	38.8	34.3
ACR (dB)	25.6	12.0	N/A
PS ACR (dB)	23.6	10.0	N/A
ELFEXT (dB)	28.8	22.8	16.8
PS ELFEXT (dB)	25.8	19.7	13.7
Return Loss (dB)	23.0	21.0	16.9
Propagation Delay (ns)	480	479	479
Delay Skew (ns)	25	25	25

5. Environmental:
   a. Storage temperature: 68°F to 122°F (20°C to 50°C)
   b. Installation Temperature: 32°F to 122°F (0°C to 50°C)
   c. Operating Temperature: -4°F to 140°F (-20°C to 60°C)
6. UL® Verified for Category Category 6 Electrical Performance
7. UL® and c (UL®) Listed for Fire Safety
8. Provide Avaya 1081 non-plenum rated Category 6, or Avaya 2081 plenum rated Category 6 UTP copper twisted pair cable or approved equal as required.

B. Multimode Fiber Optic Station Cable
   1. Refer to section 2.4 - Fiber Optic Cable for multimode fiber optic station cable type.

2.3 COPPER RISER CABLING

A. Copper Riser Cables
   1. Copper riser cable shall be Category 3 - 24 AWG multi-pair copper cable with riser rated jacket (ARMM).
   2. The bending radius and pulling strength requirements of all backbone cables shall be observed during handling and installation.
   3. Multi-pair copper riser cables within the HRW shall be plenum-rated riser type, and placed in conduit, hook system or through-floor sleeves, as described above.
   4. Multi-pair campus underground and overhead copper riser cable rated for exterior use.
   5. Multiple Twisted Pair Copper Riser Cable
      a. The multiple twisted pair copper riser cable shall consist of solid-copper conductors insulated with expanded polyethylene covered by a PVC skin, shall be conformance tested to meet EIA/TIA 568C.2 for Category 3 cables, and shall be UL® and c(UL®) Listed as CMR.
      b. The core shall be overlaid with a corrugated aluminum sheath, which is adhesively bonded to an outer jacket of PVC plastic to form an ARMM sheath.
      c. The copper riser cable shall meet or exceed the following electrical specifications

listed below:

d. Electrical Specifications:
e. Average DC Resistance: 26.5Ω/1,000 ft (8.7Ω/100m), maximum
f. Average DC Resistance Unbalance: 1.7%, maximum
g. Mutual Capacitance @ 1kHz: 16 nF/1000 ft (5.25 nF/100 m), maximum
h. Capacitance Unbalance (pair to ground): 201pF/1,000 ft (65.94 pF/100m) maximum
i. Attenuation (dB/100 m [328 ft.]):

Frequency	Attenuation (Max.)
1.00 MHz	2.3 dB
4.00 MHz	4.9 dB
10.00 MHz	8.5 dB
16.00 MHz	12 dB

j. Worst Pair Near-End Crosstalk (NEXT) dB/100 m [328 ft]:

Frequency	Pair-To-Pair NEXT (Max.)
1.0 MHz	13.8 dB
4.0 MHz	11.2 dB
10.0 MHz	10.2 dB
16.0 MHz	9.2 dB

6. Provide ARMM cable in pair counts as shown on the Low Voltage Drawings.

2.4 FIBER OPTIC CABLING

A. Fiber optic cabling shall be provided between station outlets and associated TR, and for risers between TRs, between TRs and the MDF, between the MDF and the existing campus fiber MDF, and between the MDF and existing buildings.

B. All horizontal and vertical riser fiber optic cables shall be installed in inter-duct to the fiber break-out point. Provide minimum one spare inter-duct in each conduit.

C. Fiber optic cable shall be UL® and c (UL®) Listed and shall be provided in strand counts as shown on the Low Voltage Drawings.

D. Multimode Fiber Specifications:

Core	50 μm ± 3 μm
Core Non-Circularity:	<6%
Core/Cladding Concentricity Error:	<3.0 μm
Numerical Aperture:	0.275 ± 0.015
Cladding diameter:	125 μm ± 2 μm
Cladding Non-Circularity:	<2.0%
Colored Fiber Diameter:	250 μm ± 15 μm
Buffering Diameter:	890 mm ± 50 mm
Minimum Proof Strength:	100,000 psi
Fiber Minimum Bending Radius:	.75 in. (1.91 cm)
Cable Minimum Bending Radius: During Installation: After Installation:	 20 times cable diameter 10 times cable diameter
Operating Temp. Range:	32°F to 122°F (0°C to 50°C)
Storage Temp. Range:	-40°F to 149°F (-40°C to 65°C)

Maximum Fiber Loss:	3.5 db/km at 850 nm 1.0 dB/km at 1300 nm
Minimum Bandwidth:	2200 MHz at 850 nm 1000 MHz at 1300 nm

E. Single mode Fiber Specifications:

Core	8.3 μm
Numerical Aperture:	0.275 ± 0.015
Cladding diameter:	125 μm
Colored Fiber Diameter:	250 μm
Outside Cable Diameter:	0.49 in.
Minimum Proof Strength:	100,000 psi
Tension rating:	600 lbs.
Cable Minimum Bending Radius: During Installation: After Installation:	 20 times cable diameter 10 times cable diameter
Operating Temp. Range:	-40°F to 170°F (-40°C to 77°C)
Storage Temp. Range:	-40°F to 170°F (-40°C to 77°C)
Maximum indoor/outdoor Fiber Loss:	0.5 db/km at 1310 nm 0.5 dB/km at 1550 nm

F. Sheath Construction and Strand Counts:

1. Building fiber optic cables shall be plenum, non-plenum or riser rated and provided in strand counts as follows:
2. Station fiber optic cable:
   a. For non-plenum station fiber provide Commscope or approved equivalent four strand multimode fiber optic cable with non-plenum jacket.
   b. For plenum station fiber, provide Commscope or approved equivalent four strand multi-mode fiber optic cable with plenum rated jacket.
3. Riser fiber optic cable:
   a. For vertical and horizontal multimode riser cable in strand counts as shown on the Low Voltage Drawings.
   b. For vertical and horizontal single mode riser cable in strand counts as shown on the Low Voltage Drawings.
4. Fan-out Kits:
   a. All loose tube, filled cables shall be provided with fan-out kits at each termination point.

2.5 EQUIPMENT RACKS, CABLE MANAGEMENT, AND LADDER RACKS

A. Equipment racks, cable management, and ladder racks shall be provided in the TRs as shown on the Low Voltage Drawings and specified herein to house Contractor provided patch panels and fiber shelves, and Agency-provided network and bio-medical equipment.

B. Equipment racks and cable management shall be the standard (i.e. not custom designed or built for this project) product of a single approved manufacturer.

C. Equipment Racks:
1. Equipment racks shall be standard 84” high EIA 19” wide racks drilled and tapped with 12-24 thread mounting holes on front and back rails for a minimum of 42 standard EIA rack spaces.
2. Equipment racks shall be UL Listed, designed to be self-standing, constructed of steel

or aluminum, shall be firmly fastened to the floor, fastened to ladder rack for extra support, and properly grounded.
3. Provide with front and back vertical cable management on both sides and between racks.
4. Provide with horizontal cable management below, and between each 48 port copper and/or fiber patch panel.
5. Provide with HCAI approved seismic anchorage as required.
6. Provide racks as specified on Low Voltage Drawings or equivalent by approved manufacturer.

D. Cable Management:
1. Vertical cable management shall be provided between racks and at the end of each row of racks as specified on the Low Voltage Drawings, shall extend from the top to bottom of each rack, and shall provide two separate front and back cable channels.
2. Front and back cable channels shall each provide a minimum cross section area of 36 square inches, and shall be provided with permanently affixed latches, covers, or other mechanism to hold cable neatly in place while permitting easy access to add and remove cables. Provide with feed-through holes to permit easy cable passage between front and back channels, openings to permit easy cable passage to rack mounted horizontal cable management and equipment, and openings to permit easy cable passage to ladder rack above.
3. Provide with HCAI approved seismic anchorage as required.
4. Provide vertical cable management as specified on Low Voltage Drawings or equivalent by approved manufacturer.
5. Horizontal cable management shall be provided on the front of each rack below and between each 48-port copper patch panel and fiber shelf.
6. Horizontal cable management shall consist of rack mounted panels provided with a minimum of six cable hooks or bridle rings with minimum cross section area of 4.8 square inches. Provide with latches, covers, cable slots or other permanently affixed mechanism to hold cable firmly in place while permitting easy access to add and remove cables.
7. Provide Chatsworth 11753-719 in black finish, or equivalent by approved manufacturer.

E. Horizontal Ladder Rack:
1. Horizontal ladder rack shall be provided in TRs along each wall, lengthwise across each row of data racks and equipment cabinets, and across each row of racks and cabinets from front to back a minimum of every 60 inches, as shown on the Low Voltage Drawings. Provide horizontal ladder rack in the campus fiber and copper MDFs as necessary to properly support cabling.
2. Ladder rack shall be UL Listed 12 inch wide “telco-style” cable runway and provided with junctions, transitions, and mounting hardware as necessary. Ladder rack shall be properly grounded.
3. Provide with HCAI approved seismic anchorage as required.
4. Provide horizontal ladder rack and brackets sized as specified on Low Voltage Drawings with all necessary accessories or equivalent by approved manufacturer.

2.6 CATEGORY 6 PATCH PANELS

A. Modular Patch Panels jack panels shall be provided in multiples of 48 port capacity with 110/310 style terminations and wired for T568A configuration. Wirewerks Research Labs part number WW-000041.

B. Category 6 Modular Jack Panels shall be used when 8 pin modular plug ended cord administration is required. The patch panel shall exceed the following electrical Specifications:

Table 3: Category 6* patch panel specifications requirement

Parameters	Margin over proposed category 6*	Performance @ 250 MHz*
NEXT Loss	0 dB	46 dB
FEXT	2 dB	37 dB
Insertion Loss (Attenuation)	30%	0.2 dB
Return Loss	4 dB	18 dB
LCL	-	40**

** Values above 100 MHz is provided for information only, margin applicable to swept frequency range of 1-250 MHz. Not required for conformance testing. ** Not industry specified at this time.*

C. All the patch panels shall include rear cable manger, icon/label holders, designation labels, cable ties, and mounting hardware. Designation strips for each jack shall be provided on the patch panel. All cables shall be terminated in numerical sequence and labeled as to outlet number and jack position (A, B, C, D)

D. All the patch panel rear printed circuitry shall be protected by metal enclosure. The termination shall be allowed using multi-pair impact tool to minimize termination time.

E. Provide Commscope 48 port category 6 patch panels in black finish, or approved equal, as required; provide with associated labeling.

2.6 CATEGORY 6 MODULAR PATCH CORDS

A. Patch cords will be furnished by others.

2.7 FIBER PATCH PANELS

A. Fiber Patch Panels:
   1. Fiber station cable and fiber riser cables shall be terminated in TR's on multiple outlet fiber termination shelves mounted in the equipment racks.
   2. Each fiber shelf shall be provided with connector panels and can accommodate 24 ST-type fiber connectors.
   3. Fiber connector performance characteristics shall be as specified for fiber distribution centers in section 2.10. Fiber shelves shall have slides for easy access to internal fiber connections.
   4. Provide Avaya fiber shelf/panel with 24 ST-type fiber connectors as required.

2.8 COPPER RISER AND VOICE STATION CABLE TERMINATIONS

A. Copper Voice Terminations:
   1. TR, MDF, and MPOE locations shall be equipped with 110 termination blocks for termination of copper riser cable, and for cross-connection to station cables.
   2. Provide adequate blocks for termination and cross connection of all voice riser and station cable plus 50% Station cable growth.
   3. Arrange voice termination and cross-connection blocks as shown for typical voice terminations on the Low Voltage Drawings.
   4. Provide cable guides as required to provide a neat installation.

2.9 FIBER OPTIC CONNECTORS

A. Fiber Optic Cable Connectors:

1. Provide field installable, have a quick field termination process per fiber; which does not require power, ST type connectors (for station drops only). Riser shall be ST type connectors.
2. Connectors shall be have an integrated & elongated duplex outer housings which greatly facilitate mating/de-mating
3. The optical connectors shall utilize a precision zirconia ceramic ferrule and have a typical Insertion Loss = 0.50 dB via manual polish method or 0.2 dB using an automatic fiber polisher.
4. Provide Commscope ST connectors for station drops and Commscope ST connectors for riser, or approved equivalent as required.

2.10 UNSPECIFIED EQUIPMENT AND MATERIAL

A. Any equipment or material not specifically addressed on the Low Voltage Drawings or in this document and required to provide a complete and functional Structured Cabling System installation shall be deemed a part of this specification and provided in a level of quality consistent with other specified items.

PART 3 - EXECUTION

3.0 WORKMANSHIP

A. Components of the SCS system shall be installed in a neat, workmanlike manner.

B. Wiring schemes and terminations shall be uniform throughout the system.

C. Identification markings shall be permanent, clearly readable and uniform.

D. ANSI/TIA/EIA-568-B.1 and all companion standards shall be strictly adhered to throughout the installation.

3.1 SUPPORT AND ROUTING OF CABLES

A. Station cables shall be installed in conduit in walls and above inaccessible ceilings, in j hook pathway in corridors and interstitial spaces, and on ladder rack within TRs.

B. Station cable shall be routed at right angles to electrical power circuits and supported only from the building structure.

C. Riser cables shall be extended between TRs and MDF in conduit or approved hook systems, and from MDF to MPOE and Data Center in conduit or approved hook system.

D. Use of ceiling tiles, ductwork, pipes, grid, or hanger wires for support of SCS cables is not acceptable.

E. The SCS system contractor shall furnish and install supporting rings, hooks and other supporting hardware where necessary to support cabling.

F. All supporting hardware shall be submitted and approved prior to installation.

3.2 FIRE AND SMOKE PARTITION PENETRATIONS

A. All vertical and horizontal riser cable shall be run in conduit furnished and installed by the project electrical contractor. All horizontal station cable shall be run conduit stubs from the device outlet to the nearest accessible ceiling – conduit stubs to be provided by the project electrical contractor. Cable penetrating walls and floors shall be run in conduits or sleeves furnished and installed by the project electrical contractor in accordance with the SCS

contractor's shop drawings. Cable run open above the ceiling shall be placed in conduit or approved j-hook system furnished and installed by the Design-Build contractor

B. The Contractor shall fire seal all sleeves and conduits passing through rated walls.

C. All fire sealing material shall be as approved by the project architect. Fire seal used inside conduit and sleeves shall be the re-enterable type to facilitate installation of future cable.

D. Sleeves, which pass vertically from floor to floor, shall be sealed in a similar manner using an approved re-enterable system.

E. Additional penetrations through rated assemblies necessary for passage of SCS cabling shall be made using an approved method and permanently sealed after installation of cables.

3.3 AS-BUILT DRAWINGS

A. Within 30 days after completion the Contractor shall provide as-built drawings and schedules showing all outlets and outlet types, TR locations, station and riser cable routing, and cable numbering.

B. As built drawings shall clearly show any areas where cable is routed outside of the j- hook pathway to avoid interference.

C. Outlet configuration and numbering schedule shall be provided in database format.

D. As-built drawings and outlet schedules shall be provided in reproducible hard copy and approved soft copy on computer disk; provide one copy of each.

3.4 TESTING OF WIRING ACCURACY

A. Category 6 Testing
1. Each 4-pair cable run shall be 100% tested for the appropriate Category 6 in compliance with ANSI/TIA/EIA-568-B.2-1 Addendum 1 – Transmission Performance Specifications for 4-Pair 100 Ω Category 6 Cabling. A Level IIE or better testing instrument shall be used to verify both the integrity of all conductors and correctness of the termination sequence.
2. Permanent link testing shall be performed between modular jacks at the outlets and the modular jacks at the TR patch panel or blocks.

B. Documentation
1. Documentation of cable testing shall be required and the engineer shall reserve the right to be present during testing.
2. The SCS contractor shall provide a table of test results in soft copy compatible with Agency's cable management software, and hard copy in a 3 ring binder submitted with the as-built drawings.
3. The table shall include:
   a. 100 MHz sweep tests that include length measurements and all appropriate transmission measurements for the Category 6 permanent link for all 4-pair cables installed in the system. This includes all Data/Voice station cables, backbone cables, and pairs.
   b. The table shall indicate all defective pairs and test results of all pairs listed above.
   c. Cables not complying with ANSI/TIA/EIA-568-B.2-1 Category 6 tests for swept frequency up to and including 100 MHz shall be identified to the Project Manager for corrective action which may include replacement at no additional expense to the owner.

3.5 TESTING FIBER OPTIC CABLE

A. Testing Requirements
1. Each strand in fiber optic cables shall be tested for correctness of termination and overall transmission loss using an approved fiber optic transmission loss test instrument (OTDR) or Optical Loss Test Set (OLTS) using OmniScanner II or approved equivalent.
2. The system loss measurements shall be provided at 850 and 1300 nanometers for multimode and 1310 and 1500 nanometers for single mode fibers of the completed installation.
3. The field test methodology to be used shall comply with ANSI/TIA/EIA-568-B.1 and ANSI/TIA/EIA-568-B.3. This field testing method is known as the 1-jumper reference method (ANSI/TIA/EIA-526-14A, Method B and MIL-STD-2042A SH, Part 6).

B. Documentation
1. A certification report shall be provided listing the test results and both the calculated and measured loss for each fiber.
2. The report shall be submitted with the test results as called for above.

3.6 INSPECTION

A. All work shall be performed in a high quality manner and the overall appearance shall be clean, neat and orderly.

B. The project manager and/or the Agency's Representative shall perform on-going inspections during construction.

C. The following points will be examined and must be satisfactorily complied with:
1. Is the design documentation complete? Are all cables properly labeled at each end and within 300 mm (12 in) from the termination points at each end?
2. Have all terminated cables been properly tested in accordance with the specifications for the specific category as well as tested for opens, shorts, polarity reversals, transposition and presence of AC and/or DC voltage?
3. Is the cable type suitable for its pathway? Are the cables bundled in parallel?
4. Have the pathway manufacturer's guidelines been followed? Are all cable penetrations installed properly and fire stopped according to code?
5. Have the Contractors avoided excessive cable bending?
6. Have potential EMI and RFI sources been considered?
7. Is Cable Fill percentage of pathways correct?
8. Are hanging supports within 1.5 meters (48 to 60 inches to meet TIA/EIA standards)?
9. Does hanging cable exhibit excessive or insufficient sag?
10. Are telecommunications room terminations compatible with applications equipment?
11. Have Modular Patch Panel instructions been followed?
    a. Cables dressed in a neat and orderly fashion?
    b. Cable jacket removal minimized?
    c. Termination positions are accurately installed?
    d. All pair terminations tight and undistorted?
    e. Twists maintained up to Index Strip (connecting block)?
12. Are connectors properly turned right side up in the faceplates?
13. Are Category 6 connectors wired in accordance with the T568A wiring scheme?
14. Are all cable pairs cleanly routed across the connector and directly terminated without open loops?
15. Are identification markings uniform, permanent and readable?

B. Punch List Completion:

1. Interim and final inspection reports will be submitted following inspections identifying work that is incomplete or unacceptable.
2. All punch list items must be corrected or completed within 14 days after notification

APPENDIX A

Category 6 - additional performance requirements

Worst Case Channel Performance

	100 MHz	200 MHz	250MHz
Insertion Loss	20.3 dB	29.7 dB	33.7dB
NEXT loss	42.1 dB	37.5 dB	36.1dB
PS NEXT	40.1 dB	35.5 dB	34.1dB
ACR	21.8 dB	7.8 dB	2.4dB
PS ACR	19.8 dB	5.8 dB	0.4dB
ELFEXT	25.4 dB	19.4 dB	17.4dB
PS ELFEXT	22.4 dB	16.4 dB	14.4dB
Return Loss	14.8 dB	11.7 dB	10.5dB
Prop Delay	488 ns	487 ns	487 s
Delay Skew	27 ns	28 ns	28 ns

END OF SECTION

SECTION 27-1500
CABLE TV DISTRIBUTION

PART 1 – GENERAL

1.1 GENERAL WORK DESCRIPTION

A. Cable system to interface with the existing cable TV distribution system in room 3B107 in Building 305 to extend Cable TV signal to the Pediatrics Unit. All active electronic equipment shall be UL listed. The system shall be Contractor furnished and installed.

1.2 RESPONSIBILITIES

A. The system installation shall comply with all applicable codes, standards, and regulations including, but not limited to ANSI, BICSI, EIA/TIA, FCC, IEEE, NFPA, OSHPD, UL, state and local codes.

1.3 SYSTEM DESCRIPTION

A. The system shall be furnished and installed as specified herein.

B. The system shall consist of distribution amplifiers, cable, couplers, connectors, splitters, taps, outlets, audio/visual (A/V and A/V1) outlets, faceplates and miscellaneous hardware as necessary to distribute television signals originating from the existing head-end to all televisions, TV/DVD's and television outlets:

1. Television located for each bed on wall at foot of bed (16 total beds in unit).
2. Television located in the staff break 2C33 and conference room 2C02.
3. Heights to be determined by Engineer in field.

C. Distribution amplifiers shall be provided as necessary at the existing head-end, the Telecommunication Room (TR) 3B107 in building 305 serving the third floor.

D. Low loss hard-sheathed "500" series cable shall be provided to interconnect the existing in the TR.

E. Adequate amplification and splitters shall be provided at the TR.

F. Low-loss "quad-shielded" RG-11 riser cable shall be provided to feed signal at each TR.

G. Adequate amplification and directional couplers shall be provided to feed signal to every outlet served from each TR.

H. Low-loss "quad-shielded" RG-6 station cable shall be provided to connect each outlet directly to the nearest TR. Systems that "daisy chain" outlets or utilize "T-taps" above ceilings will not be acceptable.

I. Audio/visual cable shall be provided for connection of A/V and AV1 outlets in conference room 2C02. Distribution amplifiers, splitters and couplers shall be wall mounted at the existing head-end, MDF, and TR's as shown on the IT drawings.

K. Television remote control wiring in patient rooms shall be terminated on jack behind the TV to an outlet as shown on the drawings and terminated by the nurse call system vendor at the patient station headwall. Coordinate cable pin-out with the nurse call and television equipment vendors.

L. The systems shall include A/V outlets and associated hardware and cabling in conference/ classrooms and other locations as shown on the drawings, as necessary to permit connection of portable owner-furnished video equipment and PC's for display of live or recorded video, power point presentations, and/or other programming available through the Medical Center IP Network.

M. Electrical Contractor shall provide fire resistant plywood back-boards in the TR as necessary for installation of cable TV distribution equipment.

N. Provide wire management, miscellaneous hardware, cables and connectors as necessary for installation floor amplifiers, splitters, and couplers

1.4 SYSTEM CABLING

A. All system coaxial cabling shall be minimum quad-shielded and all connectors shall be minimum cable-grade hex crimp type with captive ferrules. The entire system must comply with FCC part 76, subpart K rules and regulations for distribution and re-transmission of cable signals.

1.7 WARRANTY

A. Provide at a minimum a full system parts and labor warranty covering materials and workmanship for a period of one-year following system acceptance.

PART 2 - PRODUCTS

2.1 EQUIPMENT MANUFACTURER

A. All equipment shall be the standard product of one manufacturer and shall be as manufactured by General Instrument, Blonder-Tongue, Scientific Atlanta, or equal. Manufacturers and catalog numbers are used herein for establishing equipment criteria and are not meant to limit competition. All material and/or equipment not specified herein but necessary for proper installation and operation of the system shall be deemed part of these specifications. The approved vendors must meet all functional and quality requirements specified herein. The model numbers are used to establish the quality and features desired by this project.

2.2 DISTRIBUTION AMPLIFIERS

A. Distribution amplifiers shall be 75-ohm in/out push/pull amplifier with a minimum 31 dB gain and 44 dB output (+/- 1.00 dB) across the 47 – 750 MHz frequency range. Minimum channel loading shall be 110 channels. Provide with FCC compliant shielded housing, 15-dB gain control, 30-dB padded test output, and grounded power cord. Provide Blonder-Tongue BIDA 750-30 or equal by approved manufacturer.

2.3 SPLITTERS

A. Splitters shall be 75-ohm with "F" type connectors. Provide in 2, 3, 4, 6, and 8 outlet configurations as required. Minimum frequency range shall be 5-1000 mhz. Maximum through loss at 1000 mhz shall range from 4.2 dB for two-outputs to 12 dB for 8 outputs. Provide with die-cast housing and soldered back for a minimum 120 dB shielding. Provide Blonder-Tongue SCVS series or equal by approved manufacturer. Provide Blonder-Tongue BTF-TP 75-ohm "F" type terminating resistors for all unused taps.

2.4 DIRECTIONAL COUPLERS

A. Directional couplers 75-ohm with "F" type connectors. Provide 4 outlet configuration couplers in adequate quantity to connect all outlets served from each TC plus 10% spare taps. Provide quantities of couplers with tap-down losses as required for a balanced system. Minimum

frequency range shall be 5-1000 mhz. Maximum through-line loss at 1000 mhz shall range from 5.5 dB for 11 dB tap-down couplers to 1.0 dB for 30 dB tap-down couplers. Provide with die-cast housing and soldered back for a minimum 120 dB shielding. Provide Blonder-Tongue SDC series or equal by approved manufacturer. Provide Blonder-Tongue BTF-TP 75-ohm “F” type terminating resistors for all unused taps.

2.5 TELEVISION OUTLETS

A. Television distribution system outlets shall be 75-ohm “G/F” feed-through type to accept “F” type connector on back and “F” or “G” type connector on front. Provide with faceplate with cut-outs for 75-ohm feed-through, RJ45, nurse call system pillow speaker connector, and duplex power outlet as shown on the IT drawings. Provide Blonder-Tongue GF-81C feed-through with nut and washer for fastening, or equal by approved manufacturer.

2.6 OUTLETS

A. All outlets shall be cabled individually with each home run to the associated TR in room 3B107 in Building 305. Directional coupler outlets shall be located in the TRs, selected and bridged to the floor amplifiers to provide balanced signal output level at each outlet. All outlet cable shall be RG-6 type. Cable construction shall be 18 gauge solid copper center conductor, cellular polyethylene dielectric, and quad shielded with two braided and two foil shields. Maximum signal loss shall be 6.54 dB per 100 feet at 1000 mhz. Maximum loop resistance shall be 26.8 ohms per 1000 feet of cable.

2.7 RISER CABLE

A. Separate runs of riser cable shall be installed to each TR. Riser cable shall be RG-11 type. Cable construction shall be copper or copper clad center conductor, cellular polyethylene dielectric, and quad shielded with two braided and two foil shields. Maximum signal loss shall be 4.23 dB per 100 feet at 1000 mhz.

2.8 CONNECTOR CABLE

A. One run of low loss connector cable shall be installed from the existing on-campus MPOE in the Emergency Generator Building to the HRW MDF head-end location. Connector cable shall be “500” type sheathed cable with FCC-compliant shielding. Maximum loss shall be 2.53 dB at 1000 mhz.

2.9 SYSTEM PERFORMANCE SHALL BE AS FOLLOWS:

A. Frequency Response of the system shall be 54 MHz to 750 MHz +/- 5db with respect to the line represented by normal cable tilt.

B. Tilt shall not exceed 7 dB on the visual carrier.

C. Outlet signal level at 750 MHz shall be minimum +10dBmv +/- 5 db.

D. Maximum Loss from the common feed point at the head-end to the any outlet shall not exceed 40 db at 750 mHz.

E. Isolation between outlets shall be greater than 28 db.

F. Minimum visual carrier signal to noise ratio as measured on any channel (6 MHz bandwidth) shall be 45 db at any TV outlet.

G. Signal/Cable, Ghosts and Shadows caused by the system shall be more than 40 db below respective picture carrier.

PART 3 - EXECUTION

3.1 OUTLET & RISER WIRING

A. All outlet and riser wiring shall be furnished and installed in accordance with manufacturer's recommendations and in compliance with all local, State and National codes. All wiring shall be run open above the accessible ceilings in j-hook pathway as shown on the IT drawings. Cable run above inaccessible ceiling shall be run in conduit. Where cable is run open and j-hook pathway is not provided, Design Builder shall use j-hooks or other approved devices to support cable a minimum of every 5 feet. Cables shall not be laid upon finished ceilings or fastened to other building systems, conduit or piping. Where multi-cable runs are used, bundle all cables with approved cable ties on 36" centers. All cable shall comply with NFPA 13 when run open where fully ducted air returns are in use, and shall be rated for plenum installation where run open through spaces used for air flow. Design Builder shall confirm requirements for plenum or non-plenum cable with the Design Builder prior to cable installation.

3.2 TELECOMMUNICATION ROOMS

A. All amplifiers, splitters and couplers in the TR’s shall be mounted on plywood back boards; interconnecting cables within the closets shall be run neatly and dressed with tie wraps fastened to the back-boards. Outlet feeder cables shall be labeled with the wing and room numbers connected. Riser cables shall be labeled with the floors and areas connected.

3.3 TESTING

A. System shall be tested by and a certificate of inspection shall be furnished by a qualified manufacturer's representative or equipment vendor; submit report to the Design Builder. Testing shall include signal readings and display of picture quality on all channels under normal operating conditions.

END OF SECTION

SECTION 27-5223

NURSE CALL SYSTEM

PART 1 - GENERAL

1.1 Overall Nurse Communications Network shall utilize VoIP communications between all major components: nurse consoles, telephones and controllers. Any nurse call console must be able to answer any patient call placed in the network. Systems not utilizing the VoIP standard will not be acceptable. The communication standard shall be SIP protocol when telephones are integrated. Systems requiring digital to analog converters will not be accepted. The capability to assign patients to staff shall be via a networked software infrastructure. There are no known software limits to the number of users or units being assigned. It shall also be possible to have multiple users logging onto system via barcode or other standard human interface devices. Log on process identifies user and the current device used that day. Systems not utilizing bar code or HID sign on and/or only single PC assignment from nurses' station will not be accepted under this specification.

1.2 The system installation shall comply with all applicable codes, standards, and regulations including, but not limited to ANSI, BICSI, EIA/TIA, FCC, IEEE, NFPA, NEMA, OSHPD, UL, state and local codes.

1.3 The nurse call systems shall be listed as a total system by Underwriter's Laboratories, Inc. Listing shall be under NBRZ Hospital Signaling and Nurse Call Equipment, conforming to UL 1069 standards.

1.4 The system shall represent the manufacturer's current product at the time of installation and shall be provided with the most recent version and release of software. The manufacturer shall provide and install - free of charge - all applicable software upgrades that are released during the installation and warranty periods. All software must be capable of being diagnosed and supported by the distributor remotely. Diagnostic software shall be web based and permit e-mail notification of high level alarms. All software applications shall be HIPAA and PIPEDA compliant and shall allow for patient name aliases and alternative display methods. Complex user names, expiring passwords, granular permission settings and role based security shall be standard. All databases shall be ODBC compliant, MS SQL 2008

1.5 The Network shall be capable of backward compatibility to prior generation of similar brand Nurse/Patient Communications systems installed in the existing hospital via a network adapter module. This module will allow calls from the prior generation system to appear and go into audio communication from the common consoles, duty stations, zone lights and PC displays as well as allow patient to staff assignment via a common client application. The system shall be capable of interconnecting with the hospital's LAN (Local Area Network). This connection shall be minimal and utilize only one Ethernet 100 Mbps (or optionally 1 Gb) connection to accomplish all ADT, hospital information, reporting software and information exchange. The HL-7 standard shall be utilized for receipt of patient information from the ADT system.

1.6 The Network shall be expandable to any combination of over 15,000 bed, duty, or staff stations and 120,000 sub-stations connected as a contiguous interconnected system. Multiple buildings and intra-building connections may be linked together utilizing a fiber connection. Audio communications between devices shall be digital and virtually non- blocking, so as to provide fast, instantaneous communications without queuing or delay.

1.7 SYSTEM DESCRIPTION

A. System hardware shall consist of a nurse call network comprised of VoIP nurse consoles,

PC consoles, nurse call network controllers, patient stations, power supplies, battery back-up, dome lights, entertainment cords, call cords, pull cord stations, emergency push button stations, wiring and other options such as bed side- rail interfaces, wireless bed interface, pocket page interfaces, computer interfaces, wireless/telephone network interfaces, and network adapter module as shown on IT drawings. All necessary equipment required to meet the intent of these specifications, whether or not enumerated within these specifications, shall be supplied and installed to provide a complete and operating nurse/patient communications network.

B. System hardware and firmware shall be the product of a single, reputable manufacturer with a proven history of product reliability and sole control over all source code. Manufacturer shall provide, free of charge, product firmware/software upgrades for a period of one year from date of installation for any product feature enhancements. Manufacturer shall provide a 5 year warranty on all manufactured hardware. System configuration programming changes shall not require any exchange of parts and shall be capable of being executed remotely via a VPN connection. Any supplier whose equipment cannot support remote system configuration programming and diagnostics via VPN or requires the exchange of parts, chips for system configuration programming changes will not be acceptable.

C. All programming and firmware changes shall be accomplished on a working system without interruption to the normal operation of the system. Therefore, all system switches and controllers, which hold this firmware and system parameters must have DUAL storage. While updates are being made to one set of firmware, the system shall be working and fully functional on the original firmware (i.e. A and B memory blocks). It shall be possible to switch to the NEW system control software modules by a single system command. In the event of an error or failure in the update process, the system shall revert back to the previous firmware.

D. All communications shall be duplex audio, not only on handsets, but all loud speaking devices, including patient, staff, duty, and pillow speakers. Systems that do not have duplex audio or do not have separate microphone and speaker capability within the pillow speakers will not be accepted.

E. All wall mounted stations shall be flush mounted using snap tight cover plates. Sub plates shall be slotted and adjustable for trimming the mounting for “squaring” the vertical and horizontal fit. All screws shall be hidden.

F. All flush mount station buttons shall use a bio-seal cover to facilitate the use of disinfectant cleaners.

G. Entire Network shall be supervised, including all sub-stations. Reporting of station failure shall be to any designated console, PC, e-mail, or wireless device. Remote diagnostics shall be utilized to quickly locate the source of the problem.

H. Up to 99 different staff levels may be defined within the nurse call network to facilitate work flow within and outside of normal nurse call activity (i.e. environmental services, facilities, transportation, lab, pharmacy, etc.).

I. Nurse call network shall support a VLAN configuration to separate activity in the nurse call network from other hospital LAN traffic.

J. All specified equipment shall be manufactured using surface mount technology (SMT) and manufacturing testing shall utilize Hewlett Packard ATE (Automated Test Equipment) to assure the highest quality production. Specifying authority may

request test procedures and/or results of tests on specific equipment being supplied. Manufacturer’s testing procedures must be available upon request, including test equipment’s model number, serial numbers and date of last calibration.

K. The nurse call network shall support a GUI interface that resides on the hospital LAN. This interface consists of multiple modules such as staff assignment, PC call display, call detail recording, exception reporting, etc.

L. The nurse call network shall support at least 990 call processes to facilitate work flow and call escalations to various staff and or groups.

M. Nurse call network shall support any telephone or pager device via an open architectural interface.

N. Nurse call network shall support any ADT system via an open architectural interface.

O. Nurse call network shall support any data backup system.

1.8 ADDITIONAL SYSTEM FEATURES SHALL INCLUDE:

A. Patient calls in ICU/CCU shall initially require cancellation at the bedside. Reconfiguration to permit call cancellation following answering via two-way patient station shall be user configurable.

B. Audio monitoring of individual patient rooms or selected groups of rooms.

C. Audio paging through local corridor loudspeakers from any nurse master station.

D. All equipment and software necessary to interface with wireless telephones, radio paging and wireless staff locator. The wireless telephone system shall be used for dispatch of all call types, and provided with two-way intercom response to calls initiated from patient, staff and staff/duty stations. The radio paging system shall be used for the dispatch of all call types. System shall communicate call location, call type, and patient need through wireless telephone and/or radio paging display.

E. The wireless telephone and radio paging systems shall be capable of operating in two modes as follows: 1) automatic (night) mode shall automatically dispatch calls to assigned care team members, and 2) manual (day) mode shall allow dispatch of calls to care team members following call answering at a nurse master. During manual mode, calls that remain unanswered at the nurse master for a user configurable time shall be automatically dispatched to the assigned care team members similar to the automatic mode.

F. Ability to interface with ventilators and other patient room medical equipment via equipment alarm auxiliary jacks (symbol <AUX>) to annunciate equipment alarms at master stations, visual annunciators, staff/duty and visual duty stations, wireless telephones and radio pagers. System shall be user configurable to indicate type of medical equipment alarm (i.e. “Ventilator”, “IV Pump” or other equipment) at master stations and on wireless telephone and radio pager displays. Equipment alarm auxilliary jacks shall be provided in patient rooms as shown on the IT drawings and shall be user configurable to provide alarm on either normally open or normally closed alarm contact.

G. Placement or cancellation of any call on the system shall not cancel any other call placed at any other location on the system. Any call that is temporarily over-ridden by a higher priority call shall be automatically re-displayed once the higher priority call is canceled.

1.9 SYSTEM CAPACITIES

A. System control equipment, power supplies, annunciators and master stations provided for each patient care unit or diagnostic department shall be furnished with adequate capacity for all patient stations, duty stations, staff stations and independent toilet, shower, tub, code blue and staff-assist stations served, plus 10% expansion. Control equipment, power supplies and master stations shall have the capacity to permit capture of all calls at any master.

B. System control equipment, power supplies, annunciators and nurse master stations shall be furnished and installed as shown on the IT drawings and confirmed by owner.

C. Control equipment on all units shall be networked together to permit call capture and/or coverage between units, sharing of speech paths, sharing of wireless telephone and radio paging ports, sharing of a single HL7 hospital information system interface, and collection of

a single facility wide call activity data base.

D. System cabling shall be arranged to provide a maximum of eight patient room stations and/or staff/duty stations on any single run.

E. Wireless telephone and radio paging interface ports shall be provided to permit dispatch of patient calls on every care unit simultaneously without waiting.

1.9 SHOP DRAWINGS, EQUIPMENT BOOKS, AND CLOSE-OUT DOCUMENTS

A. Refer to specification section 27-0500 paragraph 1.5 for submittal requirements.

1.10 TRAINING

A. The owner's patient care, education, and maintenance staff shall be thoroughly instructed in system operation and technical maintenance by the manufacturer's training personnel.

B. Operational and technical training shall be performed on a full working system and shall include demonstration of each function of the system as provided with all lamps, screens, and tones in full operation.

C. Operational training classes shall be a minimum of one hour in length and shall be provided in adequate quantity and at times coordinated with the hospital's training staff to provide training for all patient care personnel. Maximum individual training class size shall be twelve.

D. Technical training shall be provided at two levels:

1. Basic technical training shall be provided for maintenance staff including basic system trouble shooting and repair, system adjustments, system configuration and software maintenance. Technical training shall include written procedures for escalating system faults to manufacturer's repair service. Basic technical training classes shall be a minimum of four hours in length and shall be provided in adequate quantity and at times coordinated with the hospital's facilities/engineering staff to provide training for all appropriate maintenance personnel. Maximum individual training class size shall be six.

2. Advanced technical training shall be available to the owner for a period of one (1) year following system acceptance. Advanced technical training shall include a complete system technical training school for four qualified technicians including training in system theory, programming, configuration, operation, high level trouble shooting, and repair. The advanced technical training program shall be

provided at no charge including tuition, manuals, miscellaneous learning materials, travel from owner's site, lodging and meals. On completion of the technical training, each hospital technician shall receive a complete set of system technical and software manuals including all related software discs and passwords, and a letter of certification indicating the technician is qualified the perform warranty and post warranty system maintenance. Advanced technical training shall be performed by the manufacturer using the manufacturer's technical training personnel. Advanced technical training performed by the Design Builder, dealer or distributor will not be accepted.

E. All training shall be documented with dated attendance sheets and written description of subject matter covered. Two copies of training documentation shall be provided and turned over to the Agency.

PART 2 - PRODUCTS

2.1 Equipment shall be the standard product of an approved manufacturer of nurse call equipment and shall represent the latest model and version offered by the manufacturer. Catalogue and model numbers shown herein are not intended to limit competition but to establish operating criteria and quality standards.

2.2 Equipment shall be the standard product of a single manufacturer; shall be as provided by Hill-Rom, or equal; and shall meet the functional, technical, and performance requirements set forth herein. Model numbers shown herein are to establish the quality and features required for this project, and under NO circumstances are intended to limit competitive bidding. ALL functions and qualities outlined by this specification MUST be met by the successful Proposer.

2.3 All material, software and/or equipment not specified herein but required for proper installation and operation of a complete working system shall be deemed part of this specification.

2.4 NURSE CALL NETWORK WIRING

All Nurse Call Network wiring shall be only CAT 5E or CAT 6. Plenum wire shall be used in open areas and supported via j-hook pathway to the terminal equipment residing in the HRW Main Building Communications space (i.e. MDF) and the Telecommunication Rooms (TRs) serving each wing or department. System shall be capable of injecting DC power into a CAT 5E or CAT 6 run, for additional rooms, or long runs, by running a separate DC cable pair to a remote location.

2.5 NURSE CALL CONTROLLER(S)

A. Furnish as needed in each nursing unit a nurse call network controller. Each controller shall provide the following:

1. Non-blocking, duplex communications between consoles and rooms, sub stations and duplex pillow speakers, within each 6 station loop. Provide four loops for a total of 12 dynamically allocated speech paths.
2. CAT 5E or CAT 6 wiring standard utilizing PoE (Power over Ethernet) between console and nurse call controllers and local wiring to power room station equipment and dome lights.
3. VoIP audio to Nurse Call Network, VoIP Nurse Console, wired or wireless phones via SIP protocol, VoIP digital audio stream out to rooms without IP overhead signaling.
4. Up to 96 corridor lights can be operated with a single controller.

B. Controller must be life safety grade meaning that it shall not require regular rebooting for continued basic functions of system and it shall be possible for controller to act as a stand-alone controller should loss of network communication occur. Personal Computers may not be used for this purpose. PCs will only be allowed outside of the UL-listed nurse call network on the customer supported LAN.

C. Nurse Call controller(s) shall be connected to the hospital's LAN via Ethernet switches. The nurse call servers also connected to the hospital's LAN are running specialized software for using hospital data resources and telephone communications resources.

2.6 VoIP NURSE CONSOLES

A. Furnish as shown on the IT drawings, a UL-1069 listed VoIP nurse console capable of the following functions:

1. Full duplex audio
2. Color display

3. 12 or 24 hours-time display and synchronization to hospital standard network time from the nurse call gateway server including any daylight savings time changes supported by the network.
4. Display up to 3 incoming calls each with an individual elapsed timer which increments time since call was placed. Also provide the ability to scroll to see all incoming calls.
5. Power over Ethernet powered connection to UL-1069 listed Ethernet controller. No local power supplies required.
6. Choice of hands-free duplex communications through built in speaker and separate microphone or private handset conversation.
7. Ability to create up to 32 soft keys, user-configurable, with 4 buttons, 8 screens deep.
8. Console shall be interactive with an associated PC workstation (user provided) without the necessity of any interconnection to the PC. The work process relationship shall be software defined through the network connections.
9. Optional tone/mute of calls in progress.
10. Ability to block all nurse call loudspeaker paging to facilitate a low noise patient environment. Password protection capable of only allowing authorized access to audio paging.
11. Ability to swing an individual room or any group of rooms by touching one labeled touch point. Room(s) and consoles may be located anywhere within hospital nurse/patient communications network.
12. Console can be programmed to be the receiver of any call that is not answered by another console, or can be programmed to receive any call from a console that has failed or has been unplugged, or otherwise not receiving the call (call orphaning).
13. Ability to dial through built in key pad.
14. Self-contained unit which shall not occupy more than 88 square inches of desk space and is desk or wall-mountable.

2.7 PC CONSOLE DISPLAY

A. Provide a PC console display on any networked owner provided PC that meets the system manufacturer's minimum specifications, whether it utilizes touch screen or standard mouse control. Also, owner provided wall mounted PC displays shall have

the global option provided in this software package of a touch screen keyboard. When a PC is "associated" with a VoIP console described previously, it shall have full interoperability to provide user with easy to follow on screen functions, such as display of call priority, room and patient information. Selecting a touch point or by mouse click shall provide an automated service reminder. While in audio contact with the patient, an enriched display shall show all user defined display information, such as caregiver assigned, and pertinent patient information.

B. The following additional functions shall be provided at each one of these users' screens:
   1. Full display of all calls, including corridor light color sequence.
   2. Complete electronically generated census of patients showing assigned caregiver, current patient needs as sent by service reminder process, time patient has been waiting for call answering, or need).
   3. Ability to text message to any single individual, group of users, or all users, a text message to a pager or wireless phone display.
   4. Ability to display calls in a centralized display format (i.e. Centralized Code Blue display).
   5. Ability to display all staff information, staff status and wireless extension.

   1.

2.9 CAREGIVER ASSIGNMENTS AND SIGNING ON and OFF DUTY

A. Provide software to make caregiver to patient assignments from any owner provided PC

workstation within the hospital by easy user sign on. Assignment process shall be intuitive and indicate to that Supervisor making the assignment, each caregiver's patient load based on number of patients and patient difficulty. These assignments shall stay in queue until each individual signs on duty. The assignment is released when the caregiver goes off duty.

B. The following additional functions shall be provided:
   1. Unlimited assignment of caregivers to patients, patients to caregivers.
   2. Group assignments.
   3. Assignments may be made up to 7 days in advance.
   4. Easy display of prior day's assignment and easy click to accept if you want to keep assignment the same.
   5. Display pertinent HL-7 fields for patient.
   6. Allow for assigning advanced call escalation for un-answered calls.
   7. Staff member shall have ability to use Bar Code for ID and wireless devices.
   8. User's assignment can print out to a local printer.
   9. User shall have the ability to go ON and OFF break forwarding their device to another caregiver and reflecting this activity in the reporting software.

2.10 PATIENT STATIONS

A. Provide single patient or dual patient station as shown on the IT drawings.

B. Each patient station shall be capable of the following functions:
   1. Separate speaker and microphone for full duplex audio. Entertainment audio to be muted when intercom in use.
   2. One DIN pillow speaker receptacle per bed that shall have a tilt design, with automatic release of pillow speaker plug when pillow speaker cord is pulled at any angle.
   3. Station shall support an optional module to feature bed side rail control on station to indicate bed connection. LED on station shall indicate bed connection(s).
   4. Built in lighting control that interfaces directly to low voltage controllers**.**
   5. One universal 1/4" jack for auxiliary alarm input/call cord per bed. Call priority of these receptacles shall be independent of any other button or receptacle**.**
   6. No dummy plugs required**.**
   7. Cancel button shall cancel any call on this station and any other station in room that is programmed for universal room cancel**.**
   8. Continuous supervision.
   9. Ability to service exchange station "hot" without removing system power or powering down the local controller.
   10. Ability to program on a per patient station basis, each bed and entertainment/call cord receptacle to custom call priorities.
   11. Supply where noted the Enhanced Single Patient Station that includes all the features above, and additionally, two programmable buttons: code blue and staff assist. Optionally these two buttons may be changed to any call process that is selected by owner by changing the buttons.
   12. Supply where noted for the Enhanced Single Patient Station an optional Clear Button Cover to prevent accidental initiation of the additional programmable buttons. Cover is easy to install and has an easy to lift cover to access the buttons.
   13. Unit shall mount in a standard electrical box sized as indicated on the IT drawings.

2.11 STAFF STATION

Provide a staff station as shown on the IT drawings. Unit shall provide two-way hands free duplex intercom to its assigned nurse console(s) by pushing a call in button. Station shall support an optional module to feature bed side rail control on station to indicate bed connection. LED on station shall indicate bed connection. Unit shall mount in a standard electrical box sized as indicated on the IT drawings.

2.12 DUTY STATION

Provide as shown on the IT drawings a duty station. Unit shall provide remote annunciation of assigned patient stations and sub-stations via 4 LED's and multiple call tones. Duty station faceplate LED's shall mimic corridor light activity for the assigned nursing area. Also provides two-way duplex intercom to the assigned nurse console(s) through separate speaker and microphone. Call tones generated at duty station must be identical and repeat in synch with tones produced at closest nurse console. It shall be possible to mute the call in tone, without cancelling call. The next call in, assigned to this duty station, will un-mute the station. Muting feature may be defeated in those jurisdictions that do not allow muting of duty station. The duty station shall be capable of being programmed for a specific time that a day/night mode takes place, allowing a volume change to the call-in tones. This feature is required to minimize noise for patients. Unit shall mount in a standard electrical box sized as indicated on the IT drawings.

2.13 SUB-STATIONS

A. Provide as shown on the IT drawings, sub-stations which shall be flush mounted in a standard electrical box sized as indicated on the IT drawings. All substation cancel buttons will follow the cancel policy as defined in the system configuration. Typically canceling a high priority call can only be accomplished by the station initiating a call, while lower priority calls may be cancelled by any associated station in the room.

B. Individual sub-stations shall be:

1. Pull cord station shall be water resistant with a replaceable PVC pull-cord, and easily cleaned surface. The pull-cord shall have a large, easy to pull plastic "bell" attached. This station may only be cancelable with the room and not cancelable from the nurse console.
2. Pull cord station with Call button shall the same characteristics as above, with the addition of one extra pushbutton for call-in. This button shall be programmable separately from the pull-cord to indicate a different call process (i.e. call caregiver to return to bed) than the pull cord which may indicate an emergency situation. The mounting is in a standard electrical box sized as indicated on the IT drawings.
3. Pull cord station with Speaker shall have all the capabilities of the pull cord station with call button, and include a built in speaker and microphone for communications with the patient. The mounting is a standard electrical box sized as indicated on the IT drawings.
4. Single call button station and Dual button stations shall be water resistant. The buttons shall be back lit and have the ability for a user defined customized call label corresponding to the 990 call priorities available within the system. An elapsed timer may be activated by any call button to start a count up timer on any clock that accepts remote activation.
5. Single and Dual call button station can have an optional Clear Cover to prevent accidental initiation of the call buttons. Clear Cover is easily lifted to access buttons and does not cover the Cancel button for easy cancelation of calls.
6. Remote Cancel Station shall have a large "Cancel" button and will follow the room cancel policy established by the system configuration.
7. Staff Registration station shall have four backlit buttons that allow by default three levels of staff and one Staff Assist Button. Any button can be configured as a staff registration or call button to provide maximum flexibility. The mounting is in a standard electrical box sized as indicated on the IT drawings.
8. A two jack auxiliary alarm station shall allow the connection of external patient monitoring devices via two (2) ¼ inch jacks. This allows individual annunciation of patient alarms to nurse call consoles and wireless devices. Each jack may be programmed for one of 990 call processes and may be configured for latching or non-latching. A call in timer may be set within system configuration to buffer a device that produces intermittent alarms.
9. Remote Tilt Release Pillow Speaker Station shall provide a remote connection for the

industry standard connector associated with a patient station. This allows the remote installation of the patient station, while keeping the 9 pin receptacle close to the patient.

10. Provide where noted, a Remote industry Standard Pillow Speaker Station. This station shall function with either legacy pillow speakers.
11. Provide where noted a Logical Input Station which allows any dry contact closure from an external device to activate a call into the nurse communications network.
12. Provide where noted a Logical Output Station that allows external devices to be controlled from the nurse call network. Either dry contacts or a driver voltage output shall be available.

2.14 CORRIDOR LIGHTS AND DOMELESS CONTROLLERS

A. Provide as shown on the IT drawings, the proper type of corridor light or dome-less controller. Corridor lights shall contain four sections, each lighted by a long life, RGB LED capable of producing 7 colors. Each section shall have a diffusion lens which allows for 180 degree horizontal visibility of call lights. The corridor lights shall be capable of the following:
   1. All segments of corridor light can indicate a call in any of the following 7 colors:

      Blue, Red, White, Green, Orange, Yellow, or Pink**.**
   2. Custom call patterns (any combination of light segments, such as all segments blue for code blue).
   3. Flash any single color or strobe the sections of the light in any color pattern.

B. Intelligence in the corridor light and dome-less controller shall support up to 16 room devices and allow for the ability of any room station to be associated with any other room in the system. This allows special functions where needed, such as associated call stations and cancelling options, (i.e. door monitoring).

C. Dome-less controllers shall have all the function of the corridor light, less LED's.

D. In the unexpected event of communications loss with the nurse call controller, corridor lights and dome-less controllers shall enter a local room failsafe mode showing all calls in the hallway via the LED indicators.

E. Corridor lights and dome-less controllers may be hot-swapped on the room-to-room communication line without the loss of communications to other devices on the local network.

F. Supply where noted a Mini Corridor Light that contains 2 sections for use in ward rooms or above bathroom doors. The top section is a White long life LED and the bottom section is a long life RGB LED capable of producing 7 colors. Each section shall have a diffusion lens which allows for 180 degree horizontal visibility of call lights.

2.15 PATIENT ENTERTAINMENT SPEAKER/CALL CORDS

A. Provide one (1) pillow speaker per bed station and 5% spares. The pillow speaker shall have a mating industry standard connector and nurse call button. TV control shall be programmed as a system function to allow pillow speakers to work with any standard hospital grade TV. Lighting control is optional to control up to two lights. All pillow speakers to have call assurance and monitor LED's. Provide pillow speaker with digital TV control with full duplex communications via built in microphone and separate speaker. There shall be three additional buttons for the use by the patient for special needs, such as "pain", "water", and "toilet". The system shall have the ability to discern the difference between these calls and send it to the appropriate care level. Standard controls shall include channel up/down, volume up/down, direct channel entry keypad, TV mute, closed caption and power on/off.

2.16 WIRELESS DEVICE INTERFACES

A. The Telephone Interface shall receive, via an Ethernet connection, VoIP connectivity using

the standard SIP protocol. This module shall support up to 60 simultaneous voice connections between wired/wireless phones and the nurse call network.

B. The facility will utilize a VoIP/SIP wireless phone system and an IP/SIP PBX. The software module shall directly support an interface through the owner provided Telephony/SIP Call server that communicates to the nurse call network gateway server. Any nurse call system that only utilizes analog station/trunk ports to communicate with SIP wireless phones will not be acceptable**.**

2.17 ADT INTERFACE

A. Provide a HL-7 compliant interface (V2.2 – 2.5) for the purpose of receiving relevant patient information.

B. This interface shall be capable of the following:
   1. Mapping of standard ADT segment field components and subcomponents to nurse call fields.
   2. All updates shall be real time, but software shall buffer data for any interruption of service

2.18 DATABASE MANAGEMENT

Provide standard ODBC (MS SQL 2008) compliant databases. Databases shall be able to be backed up using facilities standard backup processes and disaster recovery methods.

2.19 REPORTING SOFTWARE

A. Provide software that may be accessed by any networked PC work station that gives management patient call details in clear readable format. HL-7 integration shall make all pertinent patient details available, including the ability to search by patient name and/or patient ID number for those nurse call records associated for that patient during their stay, regardless of room/bed occupied. All reports shall be fully historical.

B. In addition, the reporting software shall provide the following functions:
   1. Standard, global reports
   2. Summary reports
   3. Detailed reports
   4. Graphic reports
   5. Productivity reports
   6. Staff coverage reports
   7. Reports shall be viewable in Adobe Acrobat Reader
   8. Any trained individual may utilize standard ODBC compliant reporting software to generate more enhanced reporting.
   9. Not require additional off-the-shelf software for the generation of reports.
   10. Use SQL Reporting Services for report generation.

2.20 NETWORK ADAPTER MODULE

A. Provide a module that shall be capable of backward compatibility to prior generation of Nurse/Patient Communications system manufactured by same vendor.

B. Calls from prior generation system of similar manufacture will have the following functionality with the network:
   1. Calls will appear on the common consoles, duty stations, zone lights and PC displays.
   2. Calls may be answered at consoles and establish audio, allow the setting of services and review of staff registration.
   3. Calls may be displayed at PC displays, in list and census view, to allow setting of

services and collaboration with the common display application.
4. Upgrading of calls to a higher level.
5. Changing the bed priority from “Patient” to “Special”
6. Ability to put a room in Privacy mode.

C. Use of common staff assignment client application to allow patient to staff assignments.

D. Use of common staff sign on/sign off client.

E. Staff member shall have ability to use Bar Code for ID and wireless devices.

F. Use of common reporting software.

G. Use of common wireless device interfaces.

H. Use of common ADT interface.

PART 3 - EXECUTION

3.1 All wiring shall be furnished and installed in accordance with manufacturer’s specifications and in compliance with all local, State, and National codes. All wiring shall be run in conduit in walls and above inaccessible ceilings. Wiring shall be run in j-hook pathway above accessible ceilings, and in ladder rack in the HRW Main Building Communications space (i.e. MDF) and local Telecommunication Rooms (TRs) serving each wing or department. Cables shall not be laid upon finished ceilings. Where multiple cable runs are used, bundle all cables with approved cable ties on 36" centers. All cable shall comply with NFPA 13 when run open where fully ducted air returns are in use, and shall be rated for plenum installation where run open through spaces used for air flow. Design Builder shall confirm requirements for plenum or non-plenum cable with the Design Builder prior to cable installation.

3.2 Power connected to the nurse call system components shall be provided and connected in accordance with the manufacturer’s specifications. Power for the nurse call system components shall be conditioned and regulated in accordance with the manufacturer’s specifications. Provide and connect system grounding in accordance with the manufacturer’s specifications.

3.3 All system components shall be installed, terminated and tested in conformance with the manufacturer’s specifications and in compliance with all local, State, and National codes. All system installation and terminations shall be performed in a neat and workmanlike manner.

3.4 System shall be tested by and a certificate of inspection shall be issued by the manufacturer’s technical representative and submitted to the owner.

3.5 All system equipment, software, cable and workmanship shall be warranted for a period of one (1) year from the date of owner acceptance. Warranty shall include all parts, labor, adjustments, software support, software upgrades and other materials as necessary to maintain the system in full working order for the period of one (1) year following system acceptance. Warranty shall not cover system additions, nor repairs necessitated by abuse, misuse or other damage caused by the owner or their agents.

END OF SECTION

SECTION 27-5313 – WIRELESS CLOCK SYSTEM

PART 1 - GENERAL

1.1 SUMMARY

A. This Section specifies a master clock and program control system including the following components:

1. Master clock system Primary Transmitter.
2. Secondary indicating clocks.
3. Elapsed Time clocks

1.2 DEFINITIONS

A. GPS: Global Positioning System.

B. NIST: National Institute of Science and Technology.

C. PC: Personal computer.

D. UTC: Universal time coordinated. The precisely measured time at zero degrees longitude; used as a worldwide standard for time synchronization.

1.3 SYSTEM DESCRIPTION

A. System shall perform the following functions:
1. Maintain correct synchronized time and transmit time-correction signals wirelessly from a master clock to any three type(s) of secondary indicating clocks, including the following:
   a. Analog Synchronous Clocks: Correct for minute- and second-hand synchronization at least once each hour and for hour-hand synchronization at least once each day.
   b. Digital Clocks: Test clocks automatically for synchronization with master time control at least once every hour and automatically correct those not synchronized with the time reference unit. Automatically correct clocks immediately when power is restored after an outage of normal power to the master clock.
   c. Digital Clock with Elapsed Timer: Test clocks automatically for synchronization with master time control at least once every hour and automatically correct those not synchronized with the time reference unit. Automatically correct clocks immediately when power is restored after an outage of normal power to the master clock. Interface with Elapsed Time Clock Switch to start/stop event timing.

2. Communicate with remote PC for access to UTC time base and to permit programming from remote location.
3. Maintain system access security with a minimum of three levels of user-access control to restrict use of system controls to authorized personnel. Levels of access apply to

both local access and access from a remote computer. Access to user programming and control functions is accomplished by entering a minimum three-digit code. Access levels include the following:

a. Access to review existing programs only.
b. Access to normal system operating controls.
c. Access to all user-programming and control functions.

4. Regulate system timing functions using power-line frequency, backed up for power outages by an internal battery-powered, crystal-controlled oscillator, and automated periodic reference to NIST or UTC time signals via GPS receiver and antenna. Reference time signals shall be automatically accessed at programmable intervals.
5. System and Equipment Diagnostics: An integral program shall automatically check functioning of LEDs, switches, input keys, central processor, read-only memory, random access memory, and output circuits. A display on the control panel or a remote computer with the proper access code shall indicate failure by identifying faulty component or circuit and shall recommend corrective action.
6. Daylight Savings Time Correction: Programmable for automatic correction.
7. Adjustments to Master Clock Output Signals: Duration of momentary signal shall be individually programmable for each signal and equipment-control output circuit from 1 to
99 seconds. Signals shall be programmable for either on or off switching to suit equipment-operation scheduling.

1.4 SHOP DRAWINGS, EQUIPMENT BOOKS, AND CLOSE-OUT DOCUMENTS

A. Refer to specification Division 1 for submittal requirements.

1.5 QUALITY ASSURANCE

A. Installer Qualifications: Master clock manufacturer's authorized representative who is trained and approved for installation and maintenance of units required for this Project.

B. Manufacturer Qualifications: A qualified manufacturer. Maintain, within 50 miles of Project site, a service center capable of providing training, parts, and emergency maintenance repairs.

C. Source Limitations: Obtain master and secondary clocks and signal-device-control components through one source from a single manufacturer.

D. Electrical Components, Devices, and Accessories: Listed and labeled as defined in CEC (NFPA 70), Article 100, by a testing agency acceptable to authorities having jurisdiction, and marked for intended use.

E. Comply with CEC (NFPA 70) for components and installation.

PART 2 - PRODUCTS

2.1 MANUFACTURERS

A. Manufacturers: Subject to compliance with requirements, provide products by Primex for compatibility to existing system.

2.2 GPS MASTER TIME RECEIVER/TRANSMITTER

A. Description: The system shall be comprised of a roof-top antenna and receiver to Atomic Clock signal from GPS satellites, and transmitter to retransmit Atomic clock signal throughout the HRW. Provide Primex XR series transmitter and secondary receiver/transmitters as required to ensure coverage through the facility.

2.3 SECONDARY INDICATING CLOCKS, GENERAL

A. Analog Clocks: Equipped with a sweep second hand. Movement shall be driven by self-starting, permanently lubricated, sealed synchronous motor equipped with a correcting solenoid actuator, or be a microprocessor-based, second impulse unit, compatible with the master clock and have the following features and functions:
   1. Analog clocks shall be wall mounted.
   2. Analog clocks shall be 120V power with battery back up
   3. Face shall be white. Hour and minute hands shall be black.
   4. Analog clocks shall be capable of automatically adjusting for Daylight Saving Time. An on-off switch located on the transmitter shall disable this function if desired.
   5. Time shall be automatically updated from the transmitter a minimum of 6 times per day.
   6. If the transmitter stops transmitting valid time signals due to power failure, the clocks will continue to function as accurate quartz clocks until a valid time signal is decoded.
   7. Analog clock receivers shall be as follows:
      a. Receiver sensitivity: >-110 dBm
      b. Receiver power: Standard alkaline batteries supplied by manufacturer
      c. Antenna type: internal.
   8. Wireless clock contractor shall receive approval on finishes and text style from owner and interior designer prior to ordering.
   9. Provide Primex 14306 or approved equal compatible with Primex 5 Watt XR series transmitter equipment.

B. Digital Clocks: Microprocessor-controlled unit complying with Class A device requirements in 47 CFR 15, with red LED or LCD digital time display of hours, minutes, and seconds.
   1. Digital clocks must be able to receive synchronized time signal from master or satellite transmitter.
   2. Digital clocks shall be capable of automatically adjusting for Daylight Saving Time.
   3. Digital clocks shall have a 120 VAC power supply built into the clock assembly.
   4. Digital clocks must be viewable from 150 feet.
   5. Product Features:
      a. Highly visible 7-segment LED 6-digits
      b. Display dimmer options
      c. 4” Tall Red LED digits
      d. 12- or 24-hour time display
      e. PM indicator light
      f. Power outage memory backup for up to eight hours
      g. 120 VAC/ 50–60 cycle, 18” (45.72cm) cord with pigtail
      h. Provide Primex XRA1Y203-1 or approved equal compatible with Primex 5W XR se- ries transmitter equipment.

2.4 ELAPSED INTERVAL TIMER CLOCKS

A. Elapsed Interval-Timer Clock: Digital microprocessor-controlled, 4-inch unit with 2.5-inch, LED digital display for hours and minutes and 1.3-inch display for seconds; a separately

mounted, mode-control switch; and the following features:

1. Display Visibility: Hour and minute numerals readable at 30 feet in normal ambient light.
2. Elapsed Timers must function as countdown/count up interval timers programmed with a wall mount control switch.
3. Elapsed Timers shall include a wall mountable control switch to allow the user to run, hold or reset the timer. This control will be mounted in a single gang electrical box. Control cover plate shall be stainless steel. Control buttons must be washable with water and common disinfectants. Switch control shall connect to timer with standard UTP cable a minimum of 50 in length.
4. Elapsed Timers shall have a 120 VAC power supply built into the clock assembly.
5. Elapsed Timers must be viewable from 150 feet.
6. Product Features:
   a. Highly visible 7-segment LED 6-digits
   b. Display dimmer options
   c. 4” Tall Green LED digits
7. 120 VAC/ 50–60 cycle, 18” (45.72cm) cord with pigtail
8. Operating Modes:
   a. Normal: Clock operates as a regular secondary system clock, displaying corrected time in normal display configuration, selectable between 12- and 24-hour formats, with "PM" LED display for 12-hour format.
   b. Count-Down or Count-Up Timer: Selected by mode control switch count-up and count-down positions, and capable of being preset at the mode control station. The clock shall revert to normal operating mode when the initiating signal system is reset.
   i. Provide Primex XRA1Y203EG-1-50 or approved equal compatible with Primex 5W XR series transmitter equipment.

PART 3 - EXECUTION

3.1 APPLICATION

A. Provide wall mounted analog and digital clocks receiving wireless GPS/Atomic Clock signal at locations shown on the IT drawings.

B. Provide elapsed interval-timer clock at locations as shown on the IT drawings.

3.2 INSTALLATION

A. Mount system components with fastening methods and devices designed to resist the seismic forces indicated as required.

3.3 FIELD QUALITY CONTROL

A. Manufacturer's Field Service: Engage a factory-authorized service representative to inspect, test, and adjust field-assembled components and equipment installation, including connections, and to assist in programming and field testing. Report results in writing.

B. Perform the following field adjustments, tests, and inspections and prepare test reports:

1. Perform operational-system tests to verify compliance with the Specifications and make adjustments to bring system into compliance. Include operation of all modes of clock correction and all programming and manually programmed signal and relay operating functions.
2. Verify that units and controls are properly labeled and interconnecting wires and terminals are identified.

C. Remove and replace malfunctioning units and retest as specified above.

3.4 DEMONSTRATION

A. Engage a factory-authorized service representative to train Agency's maintenance personnel to adjust, operate, and maintain clocks.

B. END OF SECTION

SECTION 32 18 16

PLAYGROUND PROTECTIVE SURFACING

PART 1 - GENERAL

1.1 SUMMARY

A. Section Includes:

1. Patching of unitary synthetic poured rubber seamless surface at Children's Playground.

B. Related Sections:

1. Section 03 30 00 "Cast-in-Place Concrete" for 3-inch concrete topping underneath play surface.

2. Section 07 54 19 "PVC Roof Patching" for polyisocyanurate insulation board beneath concrete topping.

1.2 DEFINITIONS

A. Critical Height: Standard measure of shock attenuation. According to CPSC No. 325, this means "the fall height below which a life-threatening head injury would not be expected to occur."

B. SBR: Styrene-butadiene rubber.

1.3 PERFORMANCE REQUIREMENTS

A. Impact Attenuation: According to ASTM F 1292.

B. Accessibility of Surface Systems: According to ASTM F 1951.

1.4 SUBMITTALS

A. Product Data: For each type of product indicated.

B. LEED Submittals: not required

C. Shop Drawings: For each playground surface system, include materials, plans, cross sections, drainage, installation, penetration details, and edging.

D. Samples for Verification: For each type of playground surface system indicated.
1. Minimum 9-by-9-inch Sample for Agency approval.

E. Coordination Drawings: Plans, drawn to scale, on which the following items are shown and coordinated with each other, using input from Installers of the items involved:

1. Components penetrating the playground surface.

F. Qualification Data: For qualified Installer.

G. Product Certificates: For each type of unitary synthetic playground surface system, from manufacturer.

H. Product Test Reports: Based on evaluation of comprehensive tests performed by a qualified testing agency, for each unitary synthetic playground surface system.

I. Field quality-control reports.

J. Warranty: Sample of special warranty.

K. Maintenance Data: For playground surface system to include in maintenance manuals.

1.5 QUALITY ASSURANCE

A. Installer Qualifications: An employer of workers trained and approved by manufacturer.

B. Source Limitations: Obtain playground surface system materials, including primers and binders, from single source from single manufacturer.

1. Provide secondary materials and repair materials of type and from source recommended by manufacturer of playground surface system materials.

C. Standards and Guidelines: Comply with CPSC No. 325, "Handbook for Public Playground Safety"; ASTM F 1292; and ASTM F 1487.

1.6 DELIVERY, STORAGE AND HANDLING

A. Deliver materials in manufacturer’s original, unopened, undamaged containers with identification labels intact.

B. Storage and Protection: Store materials protected from exposure to harmful environmental conditions and at a minimum temperature of 40 degrees F and a maximum temperature of 90 degrees F.

1.7 PROJECT CONDITIONS

A. Weather Limitations: Proceed with installation only when existing and forecasted weather conditions permit playground surface system installation to be performed according to manufacturers' written instructions and warranty requirements.

1.8 WARRANTY

A. Special Warranty: Manufacturer's standard form in which manufacturer agrees to repair or replace components of playground surface system that fail in materials or workmanship, within specified warranty period.

1. Failures include, but are not limited to, the following:

a. Reduction in impact attenuation.
b. Deterioration of surface and other materials beyond normal weathering.

2. Warranty Period: Five years from date of Substantial Completion.

PART 2 - PRODUCTS

2.1 UNITARY SYNTHETIC DUAL-DENSITY SEAMLESS SURFACE

A. Surface System: Poured-in-place, two-layer system with wearing course over cushion course. Provide manufacturer's standard thickness for each layer as required for overall thickness indicated, tested for impact attenuation according to ASTM F 1292 and for accessibility according to ASTM F 1951.

B. Products: Subject to compliance with requirements, provide one of the following:

1. SpectraTurf, Inc.; SpectraPour, to match existing.

C. Product Characteristics:
1. Primer/Adhesive: Manufacturer's standard primer and weather-resistant, moisture-cured polyurethane adhesive suitable for unit, substrate, and location indicated.
2. Poured in place basemat:
   a. Blend of 100% recycled SBR (styrene butadiene rubber) and urethane.
   b. Thickness as required for fall height of equipment.
   c. Formulation Components: Blend of strand and granular material.
3. Top Surface: Blend of recycled EPDM (ethylene propylene diene monomer) rubber and aromatic or aliphatic urethane binder.
   a. Thickness: nominal 1/2-inch.
4. Color and Pattern: To be selected.

D. Product Physical Properties:

1. Dry Static Coefficient of Friction (ASTM D2047): 1.0.
2. Wet Static Coefficient of Friction (ASTM D2047): 0.9.
3. Dry Skid Resistance (ASTM E303): 89.
4. Wet Skid Resistance (ASTM E303): 57.

E. Sub-base: Concrete

1. Depth: 3 inches.
2. Slope: 2% recommended.
3. Curing time: one week.

F. Drainage:

1. Poured in place system:
   a. Porous: drains at 0.4 gallons/sec/sq.yd.
   b. Water drains vertically down through the rubber and then horizontally along the sub-base.
   c. Provision shall be made for water to exit the sub-base.

G. Leveling and Patching Material: Portland cement-based grout or epoxy- or polyurethane-based formulation suitable for exterior use and approved by playground surface system manufacturer.

PART 3 - EXECUTION

3.1 EXAMINATION

A. Examine substrates and conditions, with Installer present, for compliance with requirements for maximum moisture content, subgrade and substrate conditions, drainage, and other conditions affecting performance of the Work.

B. Hard-Surface Substrates: Verify that substrates are satisfactory for unitary playground surface system installation and that substrate surfaces are dry, cured, and uniformly sloped to drain within recommended tolerances according to playground surface system manufacturer's written requirements for cross-section profile.

1. Concrete Substrates: Verify that substrates are dry, free from surface defects, and free of laitance, glaze, efflorescence, curing compounds, form-release agents, hardeners, dust, dirt, loose particles, grease, oil, and other contaminants incompatible with playground surface system or that may interfere with adhesive bond. Determine adhesion, dryness, and acidity characteristics by performing procedures recommended in writing by playground surface system manufacturer.

C. Proceed with installation only after unsatisfactory conditions have been corrected.

3.2 PREPARATION

A. General: Prepare substrates to receive surfacing products according to playground surface system manufacturer's written instructions. Verify that substrates are sound and without high spots, ridges, holes, and depressions.

B. Concrete Substrates: Provide sound surface free of laitance, efflorescence, curing compounds, and other contaminants incompatible with playground surface system.

1. Repair unsatisfactory surfaces and fill holes and depressions.
2. Mechanically scarify or otherwise prepare concrete substrates to achieve recommended degree of roughness.
3. Saw cut concrete for terminal edges of playground surface systems as indicated.
4. Treat control joints and other nonmoving substrate cracks to prevent telegraphing through playground surface system.

3.3 INSTALLATION, GENERAL

A. General: Comply with playground surface system manufacturer's written installation instructions. Install playground surface system over area and in thickness indicated.

3.4 INSTALLATION OF SEAMLESS PLAYGROUND SURFACE SYSTEMS

A. Seamless Surface: Mix and apply components of playground surface system according to manufacturer's written instructions to produce a uniform, monolithic wearing surface and impact-attenuating system of total thickness indicated.

1. Substrate Primer: Apply over prepared substrate at manufacturer's standard spreading rate for type of substrate.
2. Basemat Course: Spread evenly over primed substrate to form a uniform layer applied at manufacturer's standard spreading rate in one continuous operation, with a minimum

of cold joints.

a. Do not allow foot traffic or use of the basemat surface until it is sufficiently cured.

b. Shape basemat course to meet existing and new surfaces.

3. Wearing Course: Spread over primed base course to form a uniform layer applied at manufacturer's standard spreading rate in one continuous operation and, except where color changes, with a minimum of cold joints. Finish surface to produce manufacturer's standard wearing-surface texture.

   a. Where colored pattern is indicated, place adjacent colored material as soon as placed colored material is sufficiently cured, using primer or adhesive if required by manufacturer's written instructions.

4. Topcoat: Spray or roller applied at manufacturer's standard coating rate in one continuous operation.

5. Edge Treatment: Fully adhere edges to substrate with full coverage of substrate. Maintain fully cushioned thickness required to comply with safety performance requirements.

3.5 PROTECTION

A. Protect the installed playground surface from damage resulting from subsequent construction activity on the site.

END OF SECTION

VENTURA COUNTY MEDICAL CENTER
PEDIATRIC UNIT

PROJECT NO: P6T20009

SPEC NO: CP21-04

ABBREVIATIONS

A.F.F.	ABOVE FINISH FLOOR
A.F.S.	ABOVE FINISH SURFACE
ALT.	ALTERNATE
CBC	CALIF. BUILDING CODE
C.L.	CENTER LINE
CLG.	CEILING
C.M.U.	CONCRETE MASONRY UNIT
COL.	COLUMN
CONC.	CONCRETE
CPT.	CARPET
CT	CERAMIC TILE
DN.	DOWN
D.S.	DOWNSPOUT
DTL.	DETAIL
(E)	EXISTING
ELEC.	ELECTRICAL
EQ.	EQUAL
E.W.	EACH WAY
EXT.	EXTERIOR
F.F.	FINISH FLOOR
FIN. CLG.	FINISH CEILING
FIN. FLR.	FINISH FLOOR
F.O.	FACE OF
F.O.C.	FACE OF CONCRETE
F.O. FIN.	FACE OF FINISH
F.O.M.	FACE OF MASONRY
F.O.S.	FACE OF STUD
F.O. SHTG.	FACE OF SHEATHING
FRP	FIBER REINFORCED PLASTIC PANELS
F.S.	FINISH SURFACE
GA.	GAUGE
GYP. BD.	GYPSUM BOARD
HR.	HOUR
INT.	INTERIOR
LAV.	LAVATORY
MAX.	MAXIMUM
MIN.	MINIMUM
MFR.	MANUFACTURER
(N)	NEW
N.A.	NOT APPLICABLE
N.I.C.	NOT IN CONTRACT
O.C.	ON CENTER
O.F.C.I.	OWNER-FURNISHED, CONTRACTOR-INSTALLED
O.F.O.I.	OWNER-FURNISHED, OWNER-INSTALLED
OPP.	OPPOSITE
P.L.	PROPERTY LINE
REF.	REFRIGERATOR
REV.	REVERSE
R.O.W.	RIGHT-OF-WAY
R.T.S.	RUBBER TOP SET
SHT.	SHEET
SIM.	SIMILAR
SPECS.	SPECIFICATIONS
SV	SHEET VINYL
T.O.	TOP OF
T.O.C.	TOP OF CONCRETE
T.O.P.	TOP OF PARAPET
T.O.PL.	TOP OF PLATE
T.O. SHTG	TOP OF SHEATHING
T.O.W.	TOP OF WALL
TYP.	TYPICAL
U.N.O	UNLESS NOTED OTHERWISE
W/	WITH
WD	WOOD

PROJECT TEAM

OWNER:
VENTURA COUNTY MEDICAL CENTER
300 HILLMONT AVE.
VENTURA, CA. 93003
VOICE: (805) 652-6058
CONTACT: DR. JOHN FANKHAUSER

ARCHITECT:
RASMUSSEN & ASSOCIATES
21 S. CALIFORNIA STREET
FOURTH FLOOR
VENTURA, CA. 93001
VOICE: (805)648-1234 EX:15
CONTACT: JAY LOMAGNO
EMAIL: JLomagno@RA-Arch.com

PROJECT MANAGER:
VENTURA COUNTY PUBLIC WORKS
ENGINEERING SERVICES DEPARTMENT
800 S. VICTORIA AVE. #1670
VENTURA, CA. 93009
VOICE: (805) 654-2910
CONTACT: SHAWNA SCHLAGETER
EMAIL: Shawna.Schlageter@ventura.org

STRUCTURAL ENGINEER:
BRANDOW & JOHNSTON
700 S. FLOWER ST., SUITE 1200
LOS ANGELES, CA. 90017
VOICE: (213)596-4525
CONTACT: BOB LYONS
EMAIL: RLyons@BJSE.com

ELECTRICAL ENGINEER:
IRJ ENGINEERS, INC
4517 MARKET STREET, SUITE 1B
VENTURA, CA. 93003
VOICE: (805)642-2335
CONTACT: JACK IVERS
EMAIL: JIvers@IRJEngineers.com

MECHANICAL ENGINEER:
IRJ ENGINEERS, INC
4517 MARKET STREET, SUITE 1B
VENTURA, CA. 93003
VOICE: (805)642-2335
CONTACT: STEVE ROMOFSKY
EMAIL: SRomofsky@IRJEngineers.com

PNEUMATIC TUBE DESIGN/BUILD:
SWISSLOG HEALTHCARE
11325 MAIN STREET
BROOMFIELD, CO 80020
VOICE: (303) 373-7966
CONTACT: MATT CUMMINS
EMAIL: Matt.Cummins@swisslog.com

LIST OF SYMBOLS

- 5 — WINDOW TYPE
- 6 — DOOR CONSECUTIVE NUMBER
- 108 — ROOM CONSECUTIVE NUMBER
- 3 / A8.1 — INDICATES DETAIL NUMBER; SHEET WHERE DETAIL IS DRAWN
- 2 / A5.1 — SECTION; SHEET WHERE DETAIL IS DRAWN
- A / D / B / C / 2 / A5.1 — INTERIOR ELEVATION IDENTIFICATION; SHEET WHERE INTERIOR ELEVATION IS DRAWN
- 2 — NUMBER OF CIRCLE CORRESPONDS TO NUMBER ON NOTE LEGEND
- A — LETTER IN OVAL CORRESPONDS TO WALL CONSTRUCTION TYPE
- NORTH ARROW, ORIENTATION TO TRUE NORTH
- 2 — REVISION CLOUD INDICATES AREA REVISED
- WORK POINT, CONTROL, ELEVATION OR DATUM POINT

MATERIALS LEGEND

- EARTH
- GRAVEL OR CRUSHED ROCK BASE
- ASPHALTIC CONCRETE PAVING
- CONCRETE
- MASONRY
- PLYWOOD
- WOOD, ROUGH OR DIM. LUMBER
- INSULATION
- PLASTER
- GYPSUM WALL BOARD

TEMPORARY INSTALLATIONS

NOTE: THE FAINER WING 2ND FLOOR IS CURRENTLY VACANT. WORK PERFORMED IN THAT AREA WILL OCCUR IN VACANT, UNOCCUPIED SPACES.
INFECTION CONTROL MEASURES DURING CONSTRUCTION SHALL BE IMPLEMENTED AS REQUIRED BY THE FACILITY'S INFECTION CONTROL STAFF (TITLE 24, PART 1, SECTION 7-135). PRIOR TO CONSTRUCTION, ALL REQUIRED TEMPORARY INSTALLATIONS, INCLUDING DETAILS OF INFECTION CONTROL MEASURES SUCH AS TEMPORARY BARRIERS/MEMBRANES, PORTABLE EXHAUST FANS AND TEMPORARY DUCTWORK, MUST BE SHOWN ON THE PLANS AND REVIEWED BY HCAI. TEMPORARY CONSTRUCTION BARRIERS MUST COMPLY WITH CODE APPLICATION NOTICE NO. 9-3301. TEMPORARY INSTALLATIONS MUST NOT HAVE A NEGATIVE IMPACT ON EXISTING SYSTEMS NOR CAUSE UNSAFE CONDITIONS. TEMPORARY INSTALLATIONS SHALL MAINTAIN ADEQUATE EGRESS IN COMPLIANCE WITH THE 2019 CBC AND SHALL NOT OBSTRUCT EXISTING EXITS, CREATE A FIRE HAZARD OR REDUCE REQUIRED FIRE RESISTANCE. TEMPORARY VENTILATION SYSTEMS SHALL NOT CAUSE THE AIR BALANCE OF ADJACENT ROOMS OR SPACES TO BE IMPACTED OR ALTER THE PERFORMANCE OF PERMANENT BUILDING VENTILATION SYSTEMS. AIRFLOW MEASUREMENTS SHALL BE TAKEN TO VERIFY ADJACENT ROOMS OR SPACES ARE NOT IMPACTED. (CODE APPLICATION NOTICE NO. 2-102.6)

IN LOCATIONS WHERE OPENINGS WILL BE CREATED IN FIRE-RATED CONSTRUCTION, PROVIDE TEMPORARY CONSTRUCTION BARRIERS IN ACCORDANCE WITH CAN 9-3301. AND DETAIL 8/A8.3

ALTERNATIVELY, WHERE OPENINGS IN FIRE RATED CONSTRUCTION ARE CREATED FOR A PERIOD OF TIME NOT TO EXCEED 12 HOURS, FIRE WATCH, PER PIN 14 AND CFC 3304.5., MAY BE IMPLEMENTED, WITH THE APPROVAL OF THE FLSO. OPENINGS IN FIRE-RATED CONSTRUCTION THAT EXCEED 12 HOURS SHALL BE RESTORED WITH FIRE-RATED CONSTRUCTION.

APPLICABLE CODES

2019 CALIFORNIA ADMINISTRATIVE CODE (CAC)
2019 CALIFORNIA BUILDING CODE (CBC)
2019 CALIFORNIA ELECTRICAL CODE (CEC)
2019 CALIFORNIA MECHANICAL CODE (CMC)
2019 CALIFORNIA PLUMBING CODE (CPC)
2019 CALIFORNIA FIRE CODE (CFC)
2019 CALIFORNIA EXISTING BUILDING CODE (CEBC)

HCAI REQUIREMENTS FOR REMODELING

THE INTENT OF THE CONSTRUCTION DOCUMENTS IS TO RECONSTRUCT THE HOSPITAL BUILDING IN ACCORDANCE WITH THE CALIFORNIA BUILDING STANDARDS CODE. SHOULD ANY CONDITIONS DEVELOP NOT COVERED BY THE APPROVED CONSTRUCTION DOCUMENTS, WHEREIN THE FINISHED WORK WILL NOT COMPLY WITH THE 2019 CBC, A CHANGE ORDER DETAILING AND SPECIFYING THE REQUIRED WORK SHALL BE SUBMITTED TO AND APPROVED BY HCAI BEFORE PROCEEDING WITH THE WORK. (CODE APPLICATION NOTICE NO. 2-102.6)

A COPY OF THE HCAI PRE-APPROVED DOCUMENTS MUST BE MADE AVAILABLE AT THE JOB SITE AT ALL TIMES. INSTALLATION OF PRE-APPROVED ITEMS MUST BE DONE IN STRICT ACCORDANCE WITH THE PRE-APPROVED DOCUMENTS. IDENTIFY MANUFACTURER'S NAME AND MODEL NO., IF APPLICABLE.

ANCHORAGE AND SUPPORTS OF ALL EQUIPMENT TO BE INSTALLED, AS A PART OF THIS PROJECT SHALL BE DETAILED ON CONSTRUCTION DOCUMENTS, EXCEPT THOSE EXEMPT BY CBC 2019 SECTION 1617A.1.18 – ASCE 7 SECTION 13.1.4

EQUIPMENT SUPPORTS AND ANCHORAGE SHALL BE APPROVED BY THE APPROPRIATE DESIGN PROFESSIONAL OF RECORD AND OSHPD AS A PART OF FIELD REVIEWS/OBSERVATIONS. THE INSPECTOR OF RECORD (IOR) SHALL ASSURE THAT THE ABOVE REQUIREMENTS ARE ENFORCED.

PRIOR TO CORING OR DRILLING OF CONCRETE FLOOR OR WALL STRUCTURE, EXISTING REINFORCING BARS SHALL BE LOCATED BY NON-DESTRUCTIVE MEANS. DO NOT DAMAGE EXISTING REINFORCING BARS IN ANY WAY, UNLESS SO DETAILED ON THESE PLANS.

CODE SUMMARY

PROJECT SCOPE:

REMODELING OF EXISTING NURSING UNIT TO ADD PATIENT ROOMS AND SUPPORT SPACES FOR USE AS A PEDIATRIC NURSING UNIT. ADDITION OF A PEDESTRIAN WALKWAY BRIDGE FROM THE PEDIATRIC UNIT TO EXISTING ROOFTOP PLAY YARD.

FUNCTIONAL PROGRAM:

THE SCOPE OF THIS PROJECT WAS THE MAJOR PORTION OF THE SERVICES DESCRIBED IN THE FUNCTIONAL PROGRAM PREVIOUSLY SUBMITTED UNDER THIS PROJECT NUMBER. REMODELING ON THE FAINER WING FOURTH FLOOR AND IN THE NORTH TOWER (HRW) WILL BE SUBMITTED AS SEPARATE PROJECTS.

OCCUPANCY CLASSIFICATION:	BUILDING 304 FLOORS 1-4 = I-2 ACUTE CARE HOSPITAL BUILDING 304 BASEMENT = S-2 GENERAL STORAGE
CONSTRUCTION TYPE:	TYPE 1-A
FIRE SPRINKLERS:	BUILDING 304 IS SPRINKLERED
GROSS BUILDING AREA:	NO CHANGE
AREA OF REMODEL:	9,075 S.F.
NUMBER OF STORIES:	BASEMENT + 4 STORIES (NO CHANGE)
CORRIDOR CONSTRUCTION:	1 HOUR RATED
LICENSED BEDS:	EXISTING: 25 BEDS IN SUSPENSE PROPOSED: 16 PEDIATRIC BEDS TOTAL FACILITY BED COUNT: NO CHANGE
ACCESSIBLE PATIENT ROOMS:	EXISTING: 0 OF 13 ROOMS ARE ACCESSIBLE PROPOSED: 2 OF 13 ROOMS WILL BE ACCESSIBLE
EQUIPMENT STORAGE:	REQUIRED: 10 S.F. PER BED = 160 S.F. PROVIDED:172 S.F. (SEE NOTE 12, SHEET A2.2)
CURRENT SB-1953 STATUS:	SPC 4 , NPC 4

LATERAL FORCE DESIGN CRITERIA FOR NONSTRUCTURAL COMPONENTS & EQUIPMENT

PER 2019 C.E.B.C. SECTION 501A.3.3.1:
EXISTING SPC-4 BUILDINGS SHALL BE PERMITTED TO COMPLY WITH THE PROVISIONS OF SECTION 1630B OF THE 1998 CBC USING AN IMPORTANCE FACTOR Ip = 1.5.

FOR APPLICATION OF OSHPD OPMS AND OPDS, Sds AT THIS LOCATION = 1.592

DEFERRED APPROVALS

DEFERRED APPROVALS:

MODIFICATIONS TO FIRE SPRINKLER SYSTEM

INFANT SECURITY SYSTEM

ACCESS CONTROL / DELAYED EGRESS SYSTEM

NURSE CALL SYSTEM

ESSENTIAL ELECTRICAL SYSTEM COORDINATION STUDY

DEFERRED APPROVALS SHALL BE REVIEWED AND APPROVED BY HCAI IN ACCORDANCE WITH CAC 2019 7-126. AND ACCEPTED BY THE APPROPRIATE DESIGN PROFESSIONAL PRIOR TO SUBMISSION TO HCAI.

FOR THE PRODUCTS OR SYSTEMS INDICATED ABOVE, THE CONTRACTOR SHALL PERFORM THE FOLLOWING:

A. PREPARE SHOP DRAWINGS FOR THE PRODUCT OR SYSTEMS ADEQUATELY DESCRIBING THE WORK. PREPARE CALCULATIONS AS REQUIRED. FOR ALL ITEMS WITH CALCULATIONS, THE DRAWINGS AND CALCULATIONS SHALL BE STAMPED AND SIGNED BY A LICENSED CALIFORNIA ENGINEER OF THE APPROPRIATE DISCIPLINE.

B. CONTRACTOR SHALL SUBMIT THE DRAWINGS AND CALCULATIONS TO THE ARCHITECT FOR REVIEW. CONTRACTOR SHALL RESPOND TO ANY COMMENTS THAT THE ARCHITECT HAS, AND RESUBMIT DRAWINGS AND CALCULATIONS AS REQUIRED.

C. UPON APPROVAL BY THE ARCHITECT, THE DEFERRED APPROVAL DOCUMENTS WILL BE SUBMITTED TO HCAI FOR PLAN REVIEW AND APPROVAL.

D. NO INSTALLATION SHALL BE PREFORMED UNTIL SUCH TIME AS THE CONTRACTOR HAS RECEIVED APPROVAL FROM HCAI.

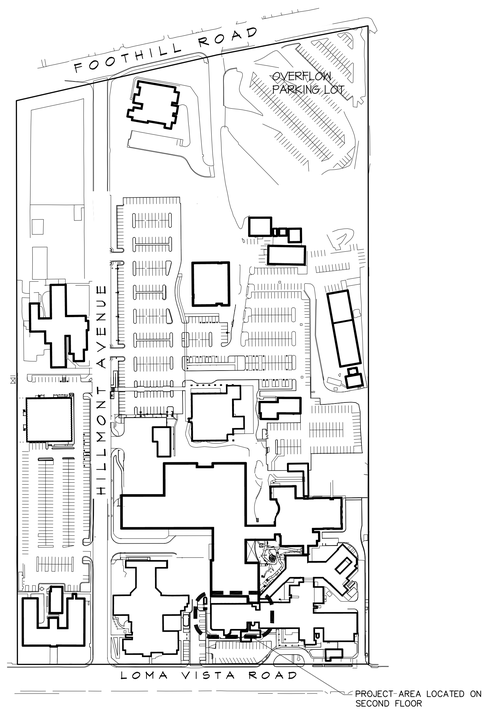

VICINITY MAP - SITE KEY PLAN
N.T.S.

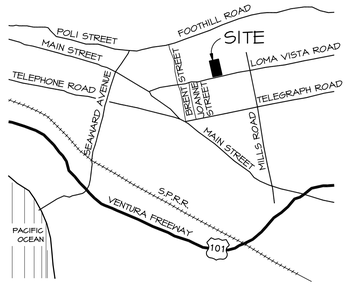

VICINITY MAP

INDEX OF DRAWINGS

T TITLE SHEET

ARCHITECTURAL
A1.1 SITE PLAN
A2.0 MASTER SECOND FLOOR PLAN
A2.1 DEMOLITION PLAN – FAINER WING – SECOND FLOOR
A2.2 FLOOR PLAN – FAINER WING – SECOND FLOOR
A2.3 PARTIAL SECOND FLOOR PLANS
A2.4 PARTIAL SECOND FLOOR PLAN
A2.5 EQUIPMENT PLAN FAINER WING SECOND FLOOR
A2.6 PARTIAL ROOF PLANS
A2.7 HELIPAD PLAN
A2.8 FAINER WING ENLARGED PLANS & SECTION AT DUMBWAITER SHAFT
A4.1 SCHEDULES
A5.0 DEMOLITION REF. CEILING PLAN FAINER WING SECOND FLOOR
A5.1 DEMOLITION REF. CEILING PLAN – FAINER WING – SECOND FLOOR
A6.1 PLAYGROUND BRIDGE PLANS & SECTIONS
A6.2 WALL SECTIONS
A7.1 INTERIOR ELEVATIONS
A7.2 INTERIOR ELEVATIONS
A7.3 INTERIOR ELEVATIONS
A7.4 INTERIOR ELEVATIONS
A8.1 DETAILS
A8.2 DETAILS
A8.3 DETAILS
A8.4 DETAILS
A8.5 ROOF DETAILS
A9.1 DETAILS
A9.2 DETAILS

STRUCTURAL
S-1.00 GENERAL NOTES
S-1.01 GENERAL NOTES
S-1.10 TYPICAL CONCRETE DETAILS
S-1.20 TYPICAL STEEL BEAM AND STEEL METAL DECK DETAILS
S-1.30 TYPICAL METAL STUD DETAIL
S-1.31 TYPICAL METAL STUD DETAILS
S-2.00 FAINER WING – SECOND LEVEL FLOOR PLAN
S-2.10 FAINER WIND – ROOF LEVEL FLOOR PLAN
S-3.00 SECTIONS AND DETAILS
S-3.01 SECTIONS AND DETAILS

MECHANICAL
M1.1 LEGEND, SCHEDULES, NOTES, KEY PLAN
M2.1 SECOND FLOOR HVAC DEMOLITION PLAN
M2.2 SECOND FLOOR HVAC PLAN
M2.3 ROOF HVAC PLAN
M3.1 SECTIONS, EQUIPMENT SCHEDULES, AIR BALANCE TABLE
M3.2 ENLARGED MECHANICAL PLANS
M4.1 HVAC SYSTEM SCHEMATIC, HVAC CONTROLS SCHEMATIC
M4.2 HVAC CONTROL DIAGRAMS
M5.1 MECHANICAL DETAILS
M5.2 MECHANICAL DETAILS
M6.1 MECHANICAL SPECIFICATIONS
M6.2 MECHANICAL SPECIFICATIONS

PLUMBING
P1.1 LEGEND, SCHEDULES, NOTES, KEY PLAN
P2.1 SECOND FLOOR PLUMBING DEMOLITION PLAN
P2.2 SECOND FLOOR PLUMBING PLAN
P2.3 FIRST FLOOR PLUMBING PLAN
P2.4 LOW ROOF PLUMBING PLAN, PARTIAL SECOND FLOOR PLUMBING PLAN
P3.1 SOIL/ WASTE/ VENT RISER DIAGRAM
P3.2 SOIL/ WASTE/ VENT RISER DIAGRAM
P3.3 STORM DRAINAGE RISER DIAGRAM
P3.4 POT. WATER RISER DIAGRAM, MED. GAS & VAC. RISER DIAGRAM
P4.1 PLUMBING DETAILS
P4.2 PLUMBING DETAILS
P5.1 PLUMBING DETAILS

ELECTRICAL
E0.1 SYMBOLS LISTS, NOTES, LUMINAIRE SCHEDULE
E0.2 PARTIAL SINGLE LINE DIAGRAM, ELECTRICAL DETAIL, KEY PLAN
E2.1 PARTIAL SECOND FLOOR LIGHTING DEMOLITION PLAN
E2.2 PARTIAL SECOND FLOOR POWER DEMOLITION PLAN
E2.3 PARTIAL SECOND FLOOR DATA AND CATV DEMOLITION PLAN
E3.1 PARTIAL SECOND FLOOR LIGHTING PLAN
E3.2 PARTIAL SECOND FLOOR POWER PLAN
E3.3 PARTIAL SECOND FLOOR DATA AND CATV PLAN
E3.4 PARTIAL ROOF ELECTRICAL PLAN
E4.1 NEW AND REVISED PANEL SCHEDULES
E4.2 EXISTING PANEL SCHEDULES
E5.1 ELECTRICAL SPECIFICATIONS

FIRE ALARM
FA-001 COVER SHEET
FA-101 SECOND FLOOR DEVICE PLACEMENT PLAN
FA-102 PARTIAL SECOND FLOOR RCP AND ROOF PLAN
FA-201 PARTIAL RISER DIAGRAM – SECOND FLOOR
FA-601 CALCULATIONS AND SCHEDULES
FA-701 WIRING TYPICALS

NURSE CALL
NC-001 COVER SHEET
NC-101 SECOND FLOOR PARTIAL PLAN

PNEUMATIC TUBE DELIVERY SYSTEM
PT-0.00 COVER SHEET
PT-1.00 MECHANICAL RISER DIAGRAM
PT-2.02 SECOND FLOOR PLAN
PT-3.00 TUBING & SUPPORT DETAILS
PT-3.01 STATION DETAILS
PT-5.00 FIRESTOP DETAILS
PT-S1.0 SEISMIC DETAILS
PT-S1.1 SEISMIC DETAILS

VENTURA COUNTY HEALTH CARE AGENCY

PUBLIC VENTURA COUNTY WORKS
ENGINEERING SERVICES

RASMUSSEN & ASSOCIATES
Architecture
Planning
Interiors
21 S. California Street
Fourth Floor
Ventura, California 93001
(805) 648-1234

PROFESSIONAL SEALS

LICENSED ARCHITECT JAY LOMAGNO C-20801 STATE OF CALIFORNIA

PERMIT APPROVAL STAMP

PERMIT NO HCAI #H202495-56-00

NO	REVISION	DATE
1	HCAI RESUBMITTAL	09/19/2022

HEALTH CARE AGENCY

DIRECTOR OF PUBLIC WORKS 9/29/22

DEPUTY DIRECTOR OF PUBLIC WORKS Christopher E. Cooper 9/27/2022

PUBLIC WORKS PROJECT MANAGER

CONSULTANT PROJECT MANAGER JAY LOMAGNO

DRAWN BY	CHECKED BY
R&A	JJL
CONSULTANT JOB NO A000495	DATE 06/15/2022

PROJECT TITLE AND ADDRESS

VENTURA COUNTY MEDICAL CENTER PEDIATRIC UNIT

300 HILLMONT AVE
VENTURA, CA 93003

COUNTY SPEC NUMBER CP21-04

COUNTY PROJECT NUMBER P6T20009

COUNTY DWG NO — SHEET 1 OF 89

SHEET TITLE

TITLE SHEET

SHEET NO T

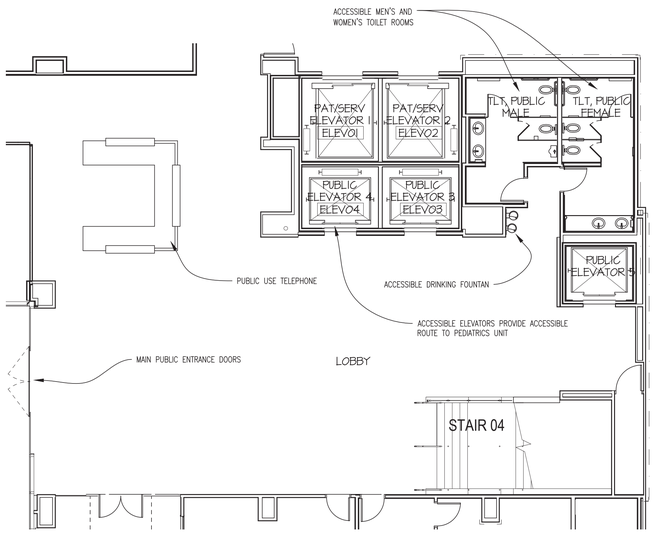

PARTIAL 1ST FLOOR PLAN AT MAIN LOBBY

SCALE 1/8" : 1'-0"

0 5 10 20

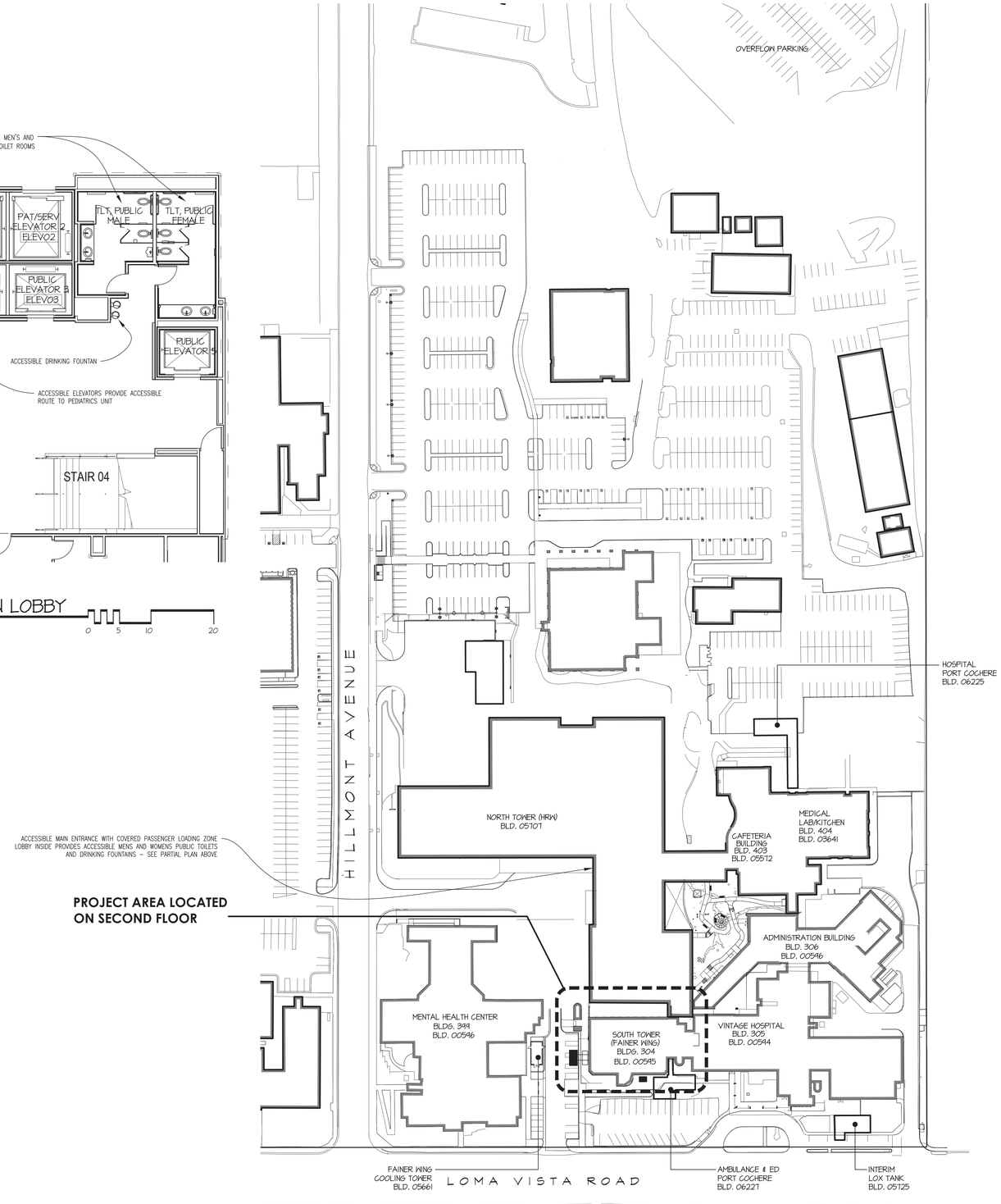

SITE PLAN

SCALE 1/64" : 1'-0"

0 20 40 60 100

GENERAL NOTES

1. ALL WORK SHALL CONFORM WITH THE 2019 CALIFORNIA BUILDING CODE (CBC), TITLE 24.
2. THE CONTRACTOR SHALL VERIFY ALL DIMENSIONS AND CONDITIONS PRIOR TO STARTING CONSTRUCTION AND BRING TO THE ATTENTION OF THE ENGINEER ANY DISCREPANCIES OR INCONSISTENCIES.
3. NO STRUCTURAL MEMBER SHALL BE CUT, NOTCHED, BORED OR OTHERWISE WEAKENED.
4. THE AGENCY SHALL BE NOTIFIED OF ANY UNUSUAL OR UNFORESEEN CONDITION WHICH AFFECTS THE STRUCTURAL STABILITY OF THE BUILDING PRIOR TO CONTINUING WITH CONSTRUCTION. SHOULD ANY CONDITION ARISE WHERE THERE APPEARS TO BE A DISCREPANCY BETWEEN THE DRAWINGS AND CONDITIONS IN THE FIELD, THE ENGINEER SHALL BE NOTIFIED PRIOR TO CONTINUING THE WORK.
5. IN THE CASE WHERE TWO OR MORE DETAILS APPLYING TO THE SAME PART OF THE WORK ARE IN CONFLICT, THE MOST RESTRICTIVE SHALL GOVERN UNLESS CLARIFIED OR OTHERWISE APPROVED BY THE ENGINEER.
6. REVIEW OF SHOP DRAWINGS MEANS REVIEW OF GENERAL METHOD OF FABRICATION ONLY. DIMENSIONS AND QUANTITIES MAY NOT BE CHECKED, AND REVIEW OF THE SHOP DRAWINGS DOES NOT RELIEVE THE CONTRACTOR FROM COMPLIANCE WITH THE CONSTRUCTION DOCUMENTS UNLESS SPECIFICALLY SO INDICATED IN THE REVIEW.
7. ALL MISC. STEEL FABRICATIONS SHALL CONFORM TO:
   - 7.1. STEEL ANGLE AND PLATE: ASTM A36
   - 7.2. HSS STEEL TUBE: ASTM A500 OR ASTM A1085
   - 7.3. THREADED STEEL BOLTS: ASTM A307
   - 7.4. WELDING: AWS D1.1
8. BOLT HOLES SHALL BE 1/16" LARGER THAN BOLT DIAMETER UNLESS SLOTTED HOLES ARE INDICATED IN DETAILS. BOLT HOLES SHALL BE PUNCHED OR DRILLED, BURNED HOLES ARE NOT PERMITTED.
9. BOLT HEADS OR NUTS BEARING ON SLOPING SURFACES SHALL BE EQUIPPED WITH BEVELED WASHERS.
10. MACHINE BOLTS AND THREADED RODS SHALL CONFORM TO ASTM A-307 AND SHALL BE DOUBLE NUTTED WHERE SHOWN. OTHERWISE, USE A LOCK WASHER BETWEEN NUT AND CONTACT SURFACE.

11–14 (NOT USED)

15. THE EXISTING STRUCTURE IS A REINFORCED CONCRETE BEARING SYSTEMS WITH CONCRETE ROOF CONSTRUCTION. INTERIOR PARTITIONS ARE NON-BEARING.
16. PERFORM WORK DURING NORMAL BUSINESS HOURS UNLESS OTHERWISE NOTED ON THE DRAWINGS AND SPECIFICATIONS 01011, 1.05.
17. VERIFY ALL DIMENSIONS AND CONDITIONS AT SITE. REPORT EXISTING CONDITIONS DISCOVERED THAT ARE NOT RECOGNIZED BY THESE DOCUMENTS TO THE AOR IMMEDIATELY. ALL DIMENSIONS AND CONDITIONS SHALL BE ESTABLISHED BY FIELD MEASUREMENT AND EXAMINATION BY THE CONTRACTOR.
18. DETAILS NOTED AS TYPICAL (TYP) SHALL APPLY IN ALL CASES WHETHER OR NOT SPECIFICALLY REFERENCED.
19. THESE DRAWINGS DO NOT CONTAIN NECESSARY ELEMENTS OF CONSTRUCTION SAFETY. AT ALL TIMES, MAINTAIN THE STABILITY AND INTEGRITY OF THE EXISTING CONSTRUCTION. PROVIDE SHORING OR OTHER MEANS AS REQUIRED TO ACCOMPLISH THIS.
    - A. SHORING, IF REQUIRED, SHALL BE FURNISHED BY THE CONTRACTOR, AND DESIGNED AND DETAILED BY A CIVIL OR STRUCTURAL ENGINEER CURRENTLY REGISTERED IN THE STATE OF CALIFORNIA.
    - B. NO COMMUNICATION DIRECTLY WITH THE IOR OR THE OWNER'S CONSULTANTS, WRITTEN OR VERBAL, SHALL BE CONSTRUED AS INSTRUCTIONS OR RECOMMENDATIONS RELATING TO ANY ASPECT OF CONSTRUCTION SAFETY.
20. RESPONSIBILITY:
    - A. THE CONTRACTOR IS SOLELY RESPONSIBLE FOR CONSTRUCTING THIS PROJECT, AND ANY ANCILLARY STRUCTURAL ELEMENTS, IN CONFORMANCE WITH THE CONTRACT DOCUMENTS. BEFORE COMMENCING WITH THE CONSTRUCTION AND FABRICATION DRAWINGS, CONTRACTOR SHALL VERIFY GOVERNING DIMENSIONS AND ELEVATIONS, EXISTING CONDITIONS AT THE SITE, AND CONSTRUCTIBILITY. THE CONTRACTOR'S RESPONSIBILITIES INCLUDE BUT ARE NOT LIMITED TO THE FOLLOWING:
      - i. THE SAFETY OF THE CONSTRUCTION SITE AND CONSTRUCTION PERSONNEL.
      - ii. THE PROTECTION AND PROPER HANDLING AND INSTALLATION OF CONSTRUCTION MATERIALS.
      - iii. THE SEQUENCE OF CONSTRUCTION (UNLESS SPECIFICALLY SPECIFIED).
      - iv. THE MEANS, METHODS AND PROCEDURES EMPLOYED.
      - v. IMPLEMENTING THE REQUIRED CONSTRUCTION.
      - vi. THE SCHEDULING OF CONSTRUCTION ACTIVITIES.
      - vii. THE SUPPORT OF TEMPORARY CONSTRUCTION LOADS AND STORAGE AND TRANSPORT OF CONSTRUCTION MATERIALS, EQUIPMENT AND PERSONNEL ON THE EXISTING STRUCTURE.
      - viii. TEMPORARY SYSTEMS, UTILITIES AND EQUIPMENT AS NEEDED TO COMPLETE THE WORK SHALL BE IN COMPLIANCE WITH OSHPD CODE APPLICATION NOTICE NO. 2-108.
    - B. THE OWNER'S TESTING AND INSPECTION AGENCY AND THEIR DEPUTY INSPECTORS ARE SOLELY RESPONSIBLE FOR THE DETAILED INSPECTION OF THE CONSTRUCTION FOR CONFORMANCE TO THE CONTRACT DOCUMENTS AS REQUIRED BY CBC CHAPTER 17A, AND AS OTHERWISE SPECIFIED IN THE CONTRACT DOCUMENTS.
21. TESTS AND INSPECTIONS: REFER TO THE TESTS, INSPECTIONS AND OBSERVATION PROGRAM PROVIDED SEPARATELY, PER 2019 CAC Sec. 7-141 & 2019 CBC 107.2. REFER TO SPECIFICATION FOR MORE INFORMATION.
22. ALL WORK IS BEING PERFORMED AT A FULLY OPERATIONAL CRITICAL CARE HOSPITAL FACILITY. CONTRACTOR SHALL TAKE CARE TO NOT DISRUPT HOSPITAL OPERATIONS DURING THE COURSE OF THE PROJECT. ALL WORK SHALL BE FULLY COORDINATED WITH THE HOSPITAL BY WAY OF THE AGENCY ENGINEERING MANAGER AND APPROVED PRIOR TO BEGINNING WORK.
23. COMMUNICATION DIRECTLY WITH THE IOR, STAFF, OWNER, OR THE OWNER'S CONSULTANTS, WRITTEN OR VERBAL, SHALL NOT BE CONSTRUED AS INSTRUCTIONS OR RECOMMENDATIONS THAT CONSTITUTE A CHANGE TO THE CONTRACT.
24. ALL WORK THAT REQUIRES INFECTION CONTROL AND FIRE LIFE SAFETY PROTOCOLS TO BE IMPLEMENTED, INCLUDING BUT NOT LIMITED TO INSTALLATION OF INFECTION CONTROL BARRIERS, SHALL BE THE SOLE RESPONSIBILITY OF THE CONTRACTOR AND AT NO ADDITIONAL COST TO THE AGENCY.
25. ALL IMPROVEMENTS SHOWN ARE EXISTING TO REMAIN UNLESS NOTED OTHERWISE.
26. THE CONTRACTOR SHALL AVOID USING CORRIDORS SERVING PATIENT BEDROOMS WITHIN THE NURSING UNITS. WHEN IT IS NECESSARY TO CROSS PATHS WITH PATIENTS AND STAFF, THE CONTRACTOR SHALL IMPLEMENT INFECTION CONTROL PROTOCOL, SUCH AS, BUT NOT LIMITED TO WALK-OFF MATS & COVERING SOILED WASTE CONTAINERS.
27. IT IS THE RESPONSIBILITY OF THE CONTRACTOR TO COORDINATE WITH THE HOSPITAL DURING THE COURSE OF THE PROJECT TO INSURE PUBLIC SAFETY AND INFECTION CONTROL MEASURES ARE IN PLACE. FLOORS 2, 3 & 4 OF BUILDING 304 WILL BE VACANT THROUGH-OUT THE DURATION OF THE WORK. THE REMAINDER OF THE BUILDING(S) WILL BE FULLY OCCUPIED.
28. THE EXISTING FIRE SPRINKLER SYSTEM IS FULLY COMPLIANT. IF NECESSARY, THE CONTRACTOR SHALL REMOVE SPRINKLER PIPES AS NEEDED TO ACCESS THE WORK AND SHALL REPLACE THE PIPES IN KIND. THE CONTRACTOR SHALL BE RESPONSIBLE TO ARRANGE FOR FIRE WATCH FOR THE CAMPUS PER PIN 14 AS APPROPRIATE AND PRESSURE TEST THE SPRINKLER PIPING UPON COMPLETION OF WORK.

VENTURA COUNTY HEALTH CARE AGENCY

PUBLIC VENTURA COUNTY WORKS

ENGINEERING SERVICES

RASMUSSEN & ASSOCIATES
Architecture
Planning
Interiors
21 S. California Street
Fourth Floor
Ventura, California 93001
(805) 648-1234

PROFESSIONAL SEALS

REGISTERED ARCHITECT JAY LOMAGNO C-20800 12-31-2022 STATE OF CALIFORNIA

PERMIT APPROVAL STAMP

REVIEWED IN ACCORDANCE WITH THE REQUIREMENTS OF T24, CCR
APPROVED
Department of Health Care Access and Information
FACILITIES DEVELOPMENT DIVISION
9/28/2022, 3:17:57 PM
H202495-56-00
Laura Baldrati

PERMIT NO HCAI #H202495-56-00

NO	REVISION	DATE
△		

PUBLIC WORKS PROJECT MANAGER

CONSULTANT PROJECT MANAGER
Jay Lomagno

DRAWN BY	CHECKED BY
R&A	JJL

CONSULTANT JOB NO	DATE
A000495	06/15/2022

PROJECT TITLE AND ADDRESS

VENTURA COUNTY MEDICAL CENTER PEDIATRIC UNIT

300 HILLMONT AVE
VENTURA, CA 93003

COUNTY SPEC NUMBER
CP21-04

COUNTY PROJECT NUMBER
P6T20009

COUNTY DWG NO — SHEET 2 OF 89

SHEET TITLE
SITE PLAN

SHEET NO
A1.1

P:\A000495 VCMC Pediatrics Wing\DRAWINGS\CONST DOCS\Fainer 2 Peds Site Plan A1.0.dwg Jun 15, 2022-4:32pm

GENERAL NOTES

1. ALL IMPROVEMENTS SHOWN ON THIS DRAWING OUTSIDE OF THE AREA OF WORK ARE EXISTING TO REMAIN UNLESS NOTED OTHERWISE.
2. SEE SHEET A2.2 FOR OCCUPANT LOADS, FIRE– AND SMOKE–RATED PARTITIONS AND BARRIERS, THIS SCOPE OF PROJECT DOES NOT CHANGE THE MEANS OF EGRESS OR TRAVEL DISTANCES FROM THE AREA OF ALTERATION.

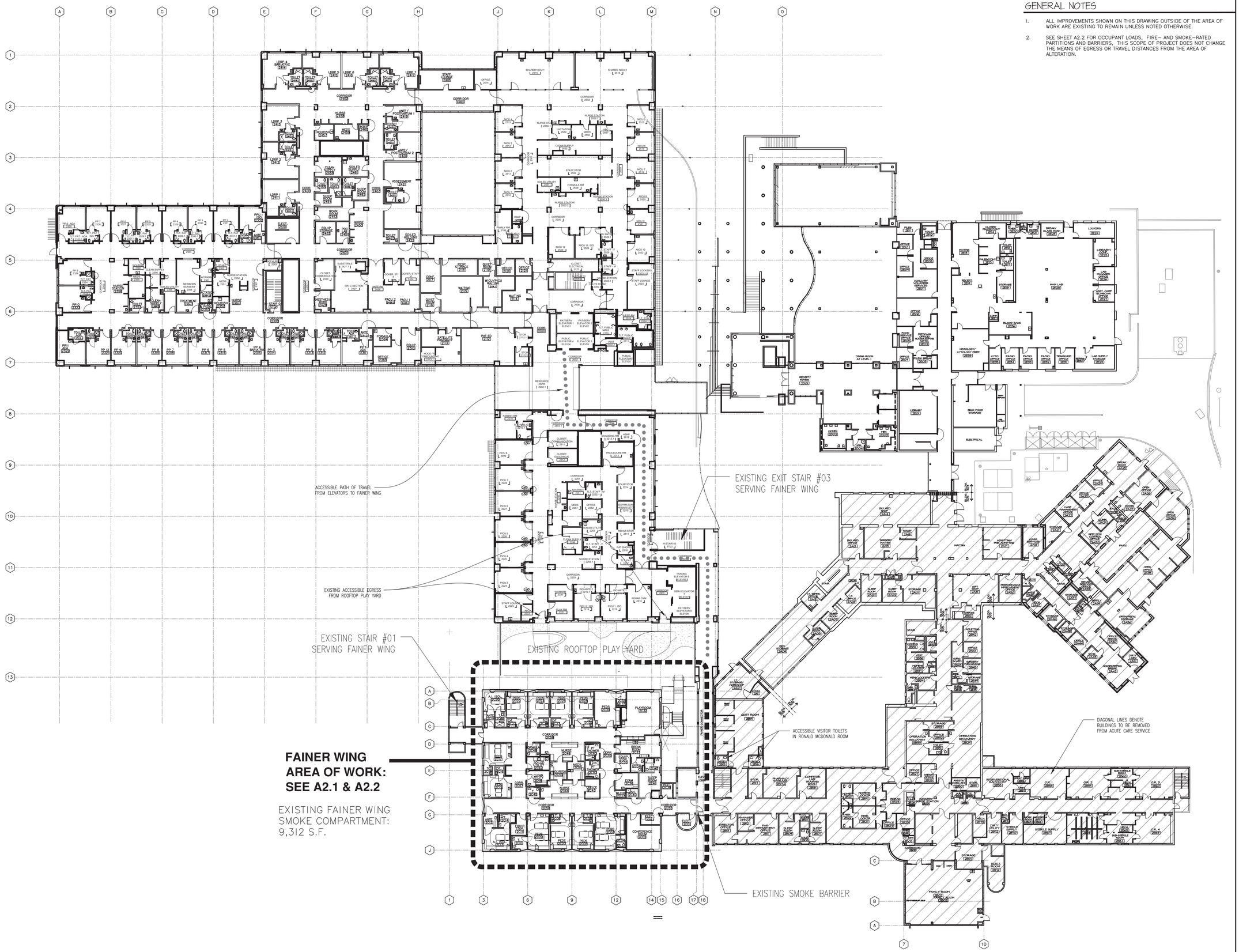

MASTER SECOND FLOOR PLAN

SCALE 1" = 20'-0"

0 5 10 15 20 25 50

N

VENTURA COUNTY HEALTH CARE AGENCY

PUBLIC WORKS VENTURA COUNTY

ENGINEERING SERVICES

RASMUSSEN & ASSOCIATES
Architecture
Planning
Interiors
21 S. California Street
Fourth Floor
Ventura, California 93001
(805) 648-1234

PROFESSIONAL SEALS

PERMIT APPROVAL STAMP

REVIEWED IN ACCORDANCE WITH THE REQUIREMENTS OF T24, CCR
APPROVED
Department of Health Care Access and Information
FACILITIES DEVELOPMENT DIVISION
9/28/2022, 3:17:57 PM
H202495-56-00
Laura Baldrati

PERMIT NO HCAI #H202495-56-00

NO	REVISION	DATE
△		

PUBLIC WORKS PROJECT MANAGER

CONSULTANT PROJECT MANAGER
Jay Lomagno

DRAWN BY	CHECKED BY
R&A	JJL
CONSULTANT JOB NO A000495	DATE 06/15/2022

PROJECT TITLE AND ADDRESS

VENTURA COUNTY MEDICAL CENTER PEDIATRIC UNIT

300 HILLMONT AVE
VENTURA, CA 93003

COUNTY SPEC NUMBER CP21-04

COUNTY PROJECT NUMBER P6T20009

COUNTY DWG NO — SHEET 3 OF 89

SHEET TITLE
MASTER SECOND FLOOR PLAN

SHEET NO A2.0

C:\Users\joe\appdata\local\temp\AcPublish_9304\Fainer 2 Peds Plans.dwg Jun 16, 2022-4:25pm

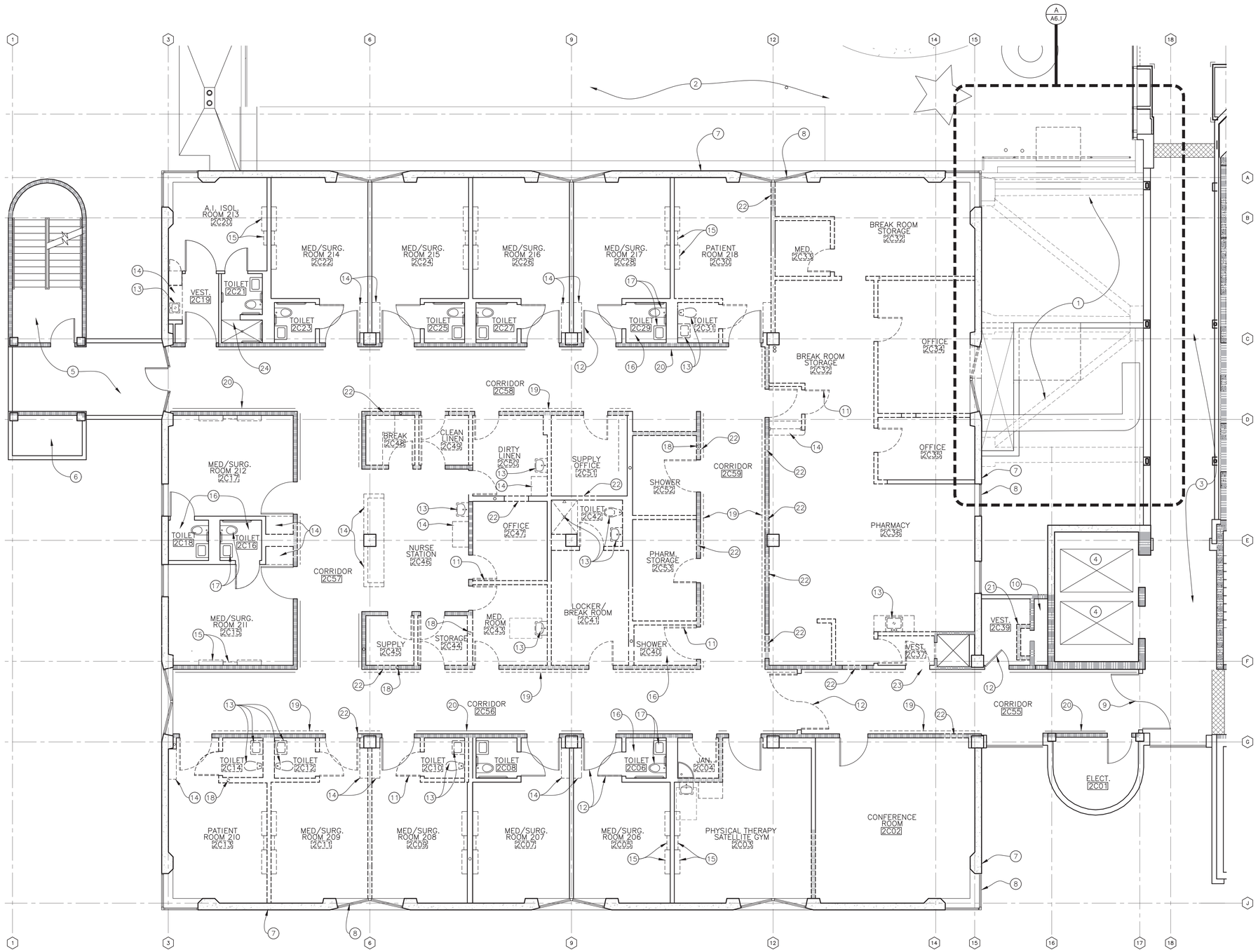

DEMOLITION PLAN - FAINER WING SECOND FLOOR

SCALE 3/16" : 1'-0"

0 5 10

NOTE LEGEND

1. SEE SEPARATE DEMOLITION PLAN ON SHEET A6.1 FOR THIS AREA.
2. EXISTING ROOFTOP PLAY YARD TO REMAIN.
3. EXISTING FAINER CONNECTOR CORRIDOR – NOT IN SCOPE OF THIS PROJECT.
4. EXISTING ELEVATORS TO REMAIN – NOT IN SCOPE OF THIS PROJECT.
5. EXISTING EXIT BALCONY AND EXIT STAIRSHAFT TO REMAIN – NOT IN SCOPE OF THIS PROJECT.
6. EXISTING DUCT SHAFT TO REMAIN – NOT IN SCOPE OF THIS PROJECT.
7. EXISTING CONCRETE EXTERIOR WALLS TO REMAIN, TYPICAL U.N.O.
8. EXISTING EXTERIOR WINDOWS TO REMAIN, TYPICAL U.N.O; SEE NOTE 19/A2.3.
9. EXISTING SMOKE BARRIER DOORS TO REMAIN. SCOPE OF PROJECT IS LIMITED TO THE AREA TO THE WEST OF THESE DOORS.
10. EXISTING SHAFT WITH LAUNDRY CHUTE AND PLUMBING RISERS. SHAFT IS 2–HOUR RATED CONSTRUCTION WITH 90–MINUTE RATED OPENINGS.
11. DOOR, FRAME, AND HARDWARE TO BE DEMOLISHED – TYPICAL FOR ALL DOORS SHOWN WITH DASHED LINEWORK.
12. DOOR AND HARDWARE TO BE REMOVED FOR REPLACEMENT DOOR WITHIN EXISTING FRAME; SEE DOOR SCHEDULE. TYPICAL FOR ALL DOORS IN PROJECT AREA SHOWN WITH SOLID LINEWORK.
13. REMOVE EXISTING PLUMBING FIXTURE – SEE PLUMBING DRAWINGS.
14. REMOVE EXISTING CASEWORK.
15. REMOVE EXISTING VERTICAL HEADWALL AND OVERBED LIGHTS; TYPICAL AT ALL PATIENT ROOMS IN PROJECT AREA.
16. REMOVE EXISTING CERAMIC TILE FLOOR AND WALL FINISH IN EXISTING TOILET AND SHOWER ROOMS: TYPICAL THROUGHOUT PROJECT AREA U.N.O.
17. REMOVE EXISTING PLUMBING FIXTURES, SALVAGE AND PROTECT FOR REINSTALLATION; TYPICAL AT EXISTING TOILET ROOMS TO REMAIN.
18. SEE PLUMBING DRAWINGS FOR RELOCATION OF EXISTING WASTE RISER.
19. REMOVE EXISTING HANDRAILS AND BRACKETS– TYPICAL AT RECONFIGURED WALLS.
20. EXISTING HANDRAILS TO BE REMOVED; HANDRAIL EXTRUSIONS TO BE SALVAGED FOR RE–INSTALLATION WITH NEW COVERS, BRACKETS, AND END CAPS. TYPICAL WHERE CORRIDOR WALLS BEHIND HANDRAILS IN PROJECT AREA ARE EXISTING TO REMAIN.
21. REMOVE EXISTING FIRE–RATED SHAFT EXTENSION AND ACCESS DOOR. COORDINATE THIS WORK WITH REPAIR OF EXISTING RATED SHAFTWALL IN ORDER TO MAINTAIN RATED ENCLOSURE OF SHAFT. SEE NOTES ON SHEET A2.2.
22. REMOVE PORTION OF EXISTING WALL FRAMING AND FINISH FOR NEW DOOR OPENING IN EXISTING WALL. SEE SHEET A2.2 FOR LOCATION.
23. REMOVE DOOR AND FRAME COMPLETE FOR REPLACEMENT DOOR AND FRAME IN EXISTING ROUGH OPENING.
24. AT 2C21, CERAMIC TILE AT FLOOR AND WALLS OF SHOWER COMPARTMENT IS EXISTING TO REMAIN. REMOVE CERAMIC TILE FINISH AT FLOOR AND WALL IN TOILET/LAVATORY AREA ONLY.

GENERAL NOTES

A. SEE FLOOR PLANS AND DOOR SCHEDULE FOR REPLACEMENT OF DOORS IN EXISTING FRAMES.

B. SEE DETAIL 8/A8.3 FOR TEMPORARY BARRICADE TO BE PROVIDED WHENEVER FIRE PARTITIONS IN AN OCCUPIED CORRIDOR ARE COMPROMISED BY DEMOLITION OR CONSTRUCTION. CORRIDORS 2C55–2C59 ARE NOT CONSIDERED "OCCUPIED" PRIOR TO SUBSTANTIAL COMPLETION OF THIS PROJECT.

WALL LEGEND

SEE SHEET A6.2 FOR WALL TYPES.

- EXISTING STUD WALL TO BE DEMOLISHED (FIRE RATING AS INDICATED BY SYMBOLS BELOW)
- EXISTING NON–RATED STUD WALL, SIM. TO WALL TYPE AI
- EXISTING ONE–HOUR RATED STUD FIRE PARTITION, SIM. TO WALL TYPE BI AT NURSE STATIONS AND B3 AT CORRIDORS U.N.O.
- EXISTING TWO–HOUR RATED FIRE BARRIER WITH METAL STUDS.
- EXISTING CONCRETE LOAD–BEARING WALL OR COLUMN
- EXISTING ONE–HOUR RATED STUD FIRE PARTITION TO BE DEMOLISHED, SIM. TO WALL TYPE BI AT NURSE STATIONS AND B3 AT CORRIDORS U.N.O.
- EXISTING TWO–HOUR RATED FIRE BARRIER WITH METAL STUDS TO BE DEMOLISHED.
- EXISTING –HOUR RATED STUD PARTITION, SIMILAR TO WALL TYPE DI. WALL WAS CONSTRUCTED AS A FULL–HEIGHT CORRIDOR WALL.

VENTURA COUNTY HEALTH CARE AGENCY

PUBLIC WORKS VENTURA COUNTY

ENGINEERING SERVICES

RASMUSSEN & ASSOCIATES
Architecture
Planning
Interiors
21 S. California Street
Fourth Floor
Ventura, California 93001
(805) 648–1234

PROFESSIONAL SEALS

LICENSED ARCHITECT JAY LOMAGNO C 20587 12-31-2022 STATE OF CALIFORNIA

PERMIT APPROVAL STAMP

REVIEWED IN ACCORDANCE WITH THE REQUIREMENTS OF T24, CCR
APPROVED
Department of Health Care Access and Information
FACILITIES DEVELOPMENT DIVISION
9/28/2022, 3:17:57 PM
H202495-56-00
Laura Baldrati

PERMIT NO HCAI #H202495-56-00

NO	REVISION	DATE
△		

PUBLIC WORKS PROJECT MANAGER

CONSULTANT PROJECT MANAGER
Jay Lomagno

DRAWN BY	CHECKED BY
R&A	JJL
CONSULTANT JOB NO	DATE
A000495	06/15/2022

PROJECT TITLE AND ADDRESS

VENTURA COUNTY MEDICAL CENTER PEDIATRIC UNIT

300 HILLMONT AVE
VENTURA, CA 93003

COUNTY SPEC NUMBER
CP21-04

COUNTY PROJECT NUMBER
P6T20009

COUNTY DWG NO — SHEET 4 OF 89

SHEET TITLE
DEMOLITION PLAN
FAINER WING
SECOND FLOOR

SHEET NO
A2.1

C:\Users\joe\appdata\local\temp\AcPublish_9304\Fainer 2 Peds Plans.dwg Jun 16, 2022-4:25pm

OCCUPANT LOAD TABULATION				
FUNCTION	C.B.C. TABLE 1004.1.2 FUNCTION CATEGORY	AREA	OCC. LOAD FACTOR	OCCUPANT LOAD
CONFERENCE	UNCONCENTRATED ASSEMBLY	303 S.F.	1:15	20.2
PLAYROOM	DAY CARE	465 S.F.	1:35	13.3
OFFICE	BUSINESS	97 S.F.	1:150	0.65
STORAGE	ACCESSORY STORAGE	198 S.F.	1:300	0.66
ELECTRICAL	ACCESSORY STORAGE	65 S.F.	1:300	0.21
ALL OTHER AREAS	INST. SLEEP AREAS	7,998 S.F.	1:120	66.6
TOTALS		**9,075 S.F.**		**101.7**

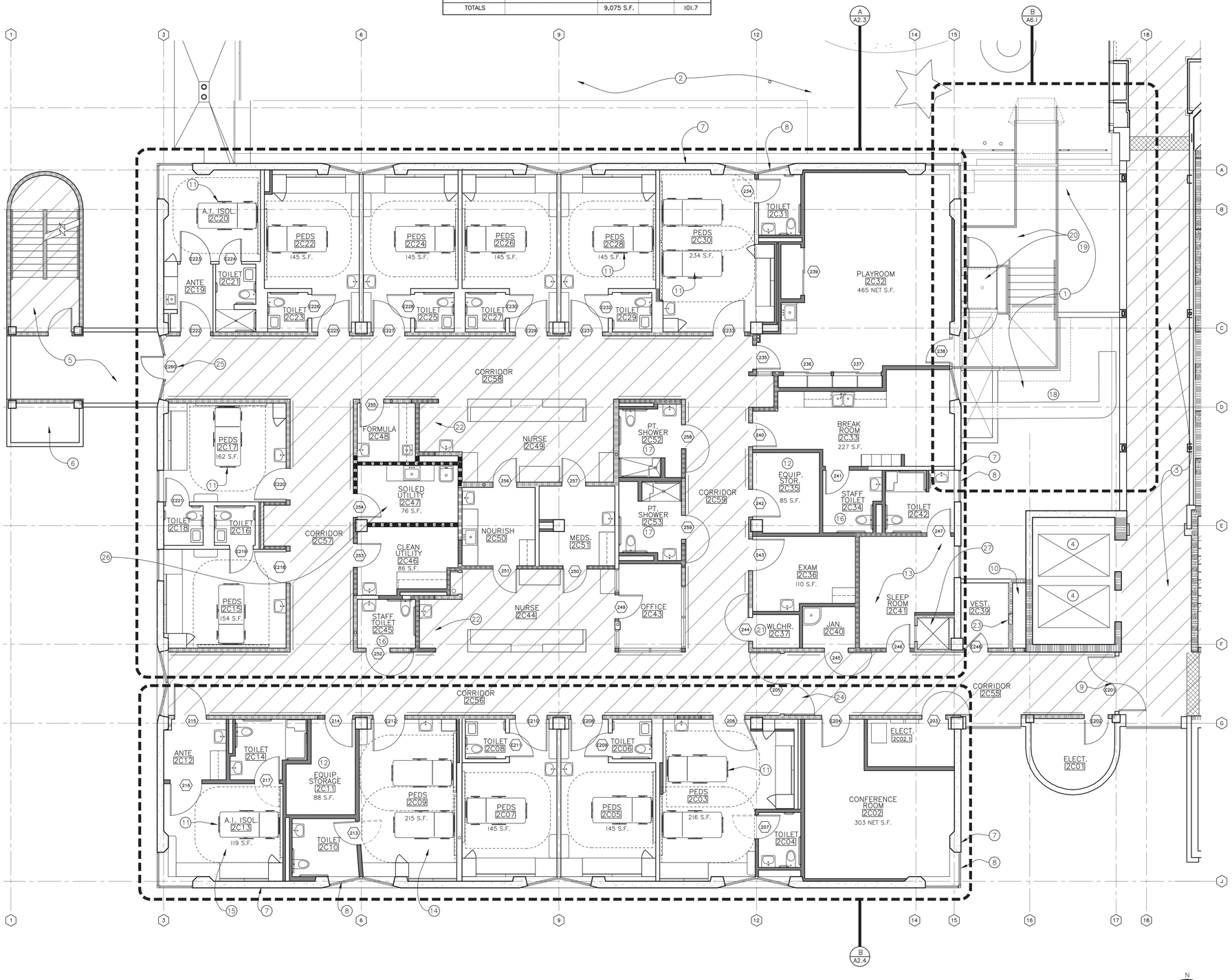

FLOOR PLAN - FAINER WING SECOND FLOOR

SCALE 3/16" : 1'-0"

NOTE LEGEND

1. SEE SEPARATE FLOOR PLAN ON SHEET A6.1 FOR THIS AREA.
2. EXISTING ROOFTOP PLAY YARD TO REMAIN.
3. EXISTING FAINER CONNECTOR CORRIDOR – NOT IN SCOPE OF THIS PROJECT.
4. EXISTING ELEVATORS TO REMAIN – NOT IN SCOPE OF THIS PROJECT.
5. EXISTING EXIT BALCONY AND EXIT STAIRSHAFT TO REMAIN – NOT IN SCOPE OF THIS PROJECT.
6. EXISTING DUCT SHAFT TO REMAIN – NOT IN SCOPE OF THIS PROJECT.
7. EXISTING CONCRETE EXTERIOR WALLS TO REMAIN, TYPICAL U.N.O.
8. EXISTING EXTERIOR WINDOWS TO REMAIN, TYPICAL U.N.O.; SEE NOTES 19 & 28 ON SHEET A2.3. PROVIDE INTERIOR ROLLER BLINDS AT ALL PATIENT ROOMS, ROOM 2C33 AND ROOM 2C41.
9. EXISTING SMOKE BARRIER DOORS TO REMAIN. SCOPE OF PROJECT IS LIMITED TO THE AREA TO THE WEST OF THESE DOORS.
10. EXISTING SHAFT WITH LAUNDRY CHUTE AND PLUMBING RISERS. SHAFT IS 2–HOUR RATED CONSTRUCTION WITH 90–MINUTE RATED OPENINGS.
11. PATIENT BED LOCATION, WITH 3' CLEARANCE AT SIDES, 3' CLEARANCE AT FOOT OF PRIVATE BEDS, 4' CLEARANCE AT FOOT OF SEMI–PRIVATE BEDS. TYPICAL.
12. EQUIPMENT STORAGE ROOM: 88 S.F. AT ROOM 2C11, 84 S.F. AT ROOM 2C35.
13. PHYSICIAN SLEEP ROOM – R–2 ACCESSORY OCCUPANCY WITH 1–HOUR RATED FIRE PARTITIONS PER CBC 420.2, FLOOR TO UNDERSIDE OF SLAB ABOVE.
14. ACCESSIBLE PATIENT ROOM AND TOILET.
15. ACCESSIBLE PATIENT ISOLATION ROOM, ANTEROOM, AND TOILET/SHOWER ROOM.
16. ACCESSIBLE STAFF TOILET ROOM.
17. ACCESSIBLE PATIENT SHOWER / TOILET ROOMS. THESE ROOMS ALSO PROVIDE TOILET FACILITIES FOR PLAYROOM.
18. EXTERIOR SPACE ABOVE FIRST FLOOR ROOF.
19. EXTERIOR SPACE ABOVE LIGHTWELL DOWN TO GRADE BELOW.
20. PEDESTRIAN BRIDGE AND WHEELCHAIR LIFT TO PROVIDE ACCESS FROM PEDIATRICS UNIT TO PLAY YARD.
21. 25 S.F. WHEELCHAIR STORAGE.
22. STORAGE LOCATION FOR CPR CART.
23. INFILL EXISTING OPENING IN 2–HOUR RATED SHAFT ENCLOSURE WITH 2–HOUR RATED USG SHAFTWALL ASSEMBLY. SEE DETAIL 13/A8.2.
24. AT DOOR E205 ONLY: LISTED DELAYED EGRESS SYSTEM UTILIZING MAGNETIC LOCKS, CONFORMING TO THE REQUIREMENTS OF CBC 1010.1.9.8, TO CONTROL PASSAGE THROUGH DOORS IN BOTH DIRECTIONS. DOORS SHALL ALSO HAVE POWER DOOR OPERATORS ACTIVATED BY ACCESS CONTROL SYSTEM. THE SYSTEM SHALL HAVE SWITCH AT NURSE STATIONS 2C44 AND 2C49 TO IMMEDIATELY UNLOCK AND OPEN DOORS, WITH INTERCOM UNITS AT BOTH SIDES OF DOORS. BADGE READERS AT BOTH SIDES OF DOORS SHALL PROVIDE IMMEDIATE UNLOCKING AND DOOR OPERATOR ACTIVATION.
25. AT DOOR E260 ONLY: LISTED DELAYED EGRESS SYSTEM UTILIZING MAGNETIC LOCKS, CONFORMING TO THE REQUIREMENTS OF CBC 1010.1.9.8. . HARDWARE SHALL INTERFACE WITH ACCESS CONTROL SYSTEM AND FIRE ALARM SYSTEM TO CONTROL UNLOCKING.
26. SOILED UTILITY 2C47 IS AN INCIDENTAL USE AREA, WITH 1–HOUR RATED FIRE BARRIERS EXTENDING FLOOR TO UNDERSIDE OF FLOOR SLAB ABOVE.
27. EXISTING SHAFT WITH 2–HOUR RATED SHAFTWALL ENCLOSING WALLS AT ABANDONED DUMBWAITER. SEE SHEET A2.8.

00176 - FIRE (Bryan Winn)
Where a release device is provided to allow by-pass of the delayed egress door, a means to deactivate the delayed egress door from an approved location shall be provided separate from door release device. 2019 CBC 1010.1.9.8.1

GENERAL NOTES

A. INDICATES EXTENT OF CORRIDOR ENCLOSURE WITH 1–HOUR RATED WALLS. CORRIDORS HAVE 1–HOUR RATED CEILINGS ABOVE EXCEPT AT NURSE STATIONS 2C44 AND 2C49.

B. SEE SHEETS A2.3 AND A2.4 FOR DIMENSIONS, NOTES, AND REFERENCES.

C. SEE SHEET A2.0 FOR LOCATIONS OF ENCLOSED EXIT STAIRS.

D. CONTRACTOR SHALL PROVIDE BACKING AND INSTALLATION FOR THE FOLLOWING ACCESSORIES IN EACH PATIENT ROOM AND TOILET ROOM; LOCATIONS AT EACH ROOM TO BE CONFIRMED WITH ENGINEER:
PATIENT ROOM: GLOVE BOX RACK (OFCI), PATIENT WHITEBOARD (OFCI), TOWEL DISPENSER (CFCI).
TOILET ROOM: TOWEL DISPENSER (CFCI), TOILET PAPER DISPENSER (CFCI), SEAT COVER DISPENSER (CFCI), COAT HOOK (CFCI), GRAB BARS (CFCI).

E. PROVIDE 3"x3"x96" VINYL HIGH–IMPACT CORNER GUARDS AT ALL 90–DEGREE OUTSIDE CORNERS OF WALLS IN ALL ROOMS. CORNER GUARDS MAY BE DELETED WHERE CABINETS EXTEND TO CORNER.

WALL LEGEND

SEE SHEET A6.2 FOR WALL TYPE SECTIONS.

- NON–RATED STUD WALL, WALL TYPE AI U.N.O.
- NON–RATED DOUBLE–STUD WALL, WALL TYPE A2 U.N.O.
- ONE–HOUR RATED STUD FIRE PARTITION, WALL TYPE BI AT NURSE STATIONS AND TYPE B3 AT CORRIDORS U.N.O.
- NON–RATED STUD WALL PARALLEL TO EXISTING ONE–HOUR RATED STUD FIRE PARTITION, WALL TYPE B2 U.N.O.
- ONE–HOUR RATED STUD FIRE PARTITION WALL TYPE CI U.N.O
- EXISTING NON–RATED STUD WALL, SIM. TO WALL TYPE AI
- EXISTING –HOUR RATED STUD PARTITION, SEE WALL TYPE DI. WALL IS CLASSIFIED AS FIRE BARRIER WITH PROTECTED OPENINGS AND PENETRATIONS AT SOILED UTILITY ROOM.
- EXISTING ONE–HOUR RATED STUD FIRE PARTITION, SIM. TO WALL TYPE BI AT NURSE STATIONS AND B3 AT CORRIDORS U.N.O.
- EXISTING TWO–HOUR RATED FIRE BARRIER WITH METAL STUDS.
- EXISTING CONCRETE LOAD–BEARING WALL OR COLUMN
- EXISTING ONE–HOUR RATED STUD FIRE PARTITION, SIM. TO WALL TYPE BI AT NURSE STATIONS AND B3 AT CORRIDORS U.N.O.
- ONE–HOUR RATED STUD FIRE BARRIER, WALL TYPE DI AT SOILED UTILITY ROOM, U.N.O.

VENTURA COUNTY HEALTH CARE AGENCY

PUBLIC WORKS VENTURA COUNTY

ENGINEERING SERVICES

RASMUSSEN & ASSOCIATES
Architecture
Planning
Interiors
21 S. California Street
Fourth Floor
Ventura, California 93001
(805) 648-1234

PROFESSIONAL SEALS

REGISTERED ARCHITECT JAY LOMAGNO C-20896 2-31-2023 STATE OF CALIFORNIA

PERMIT APPROVAL STAMP

REVIEWED IN ACCORDANCE WITH THE REQUIREMENTS OF T24, CCR
APPROVED
Department of Health Care Access and Information
FACILITIES DEVELOPMENT DIVISION
9/28/2022, 3:17:57 PM
H202495-56-00
Laura Baldrati

PERMIT NO HCAI #H202495-56-00

NO	REVISION	DATE
△		

PUBLIC WORKS PROJECT MANAGER

CONSULTANT PROJECT MANAGER
Jay Lomagno

DRAWN BY	CHECKED BY
R&A	JJL
CONSULTANT JOB NO A000495	DATE 06/15/2022

PROJECT TITLE AND ADDRESS

VENTURA COUNTY MEDICAL CENTER PEDIATRIC UNIT

300 HILLMONT AVE
VENTURA, CA 93003

COUNTY SPEC NUMBER
CP21-04

COUNTY PROJECT NUMBER
P6T20009

COUNTY DWG NO — SHEET 5 OF 89

SHEET TITLE
FLOOR PLAN
FAINER WING
SECOND FLOOR

SHEET NO
A2.2

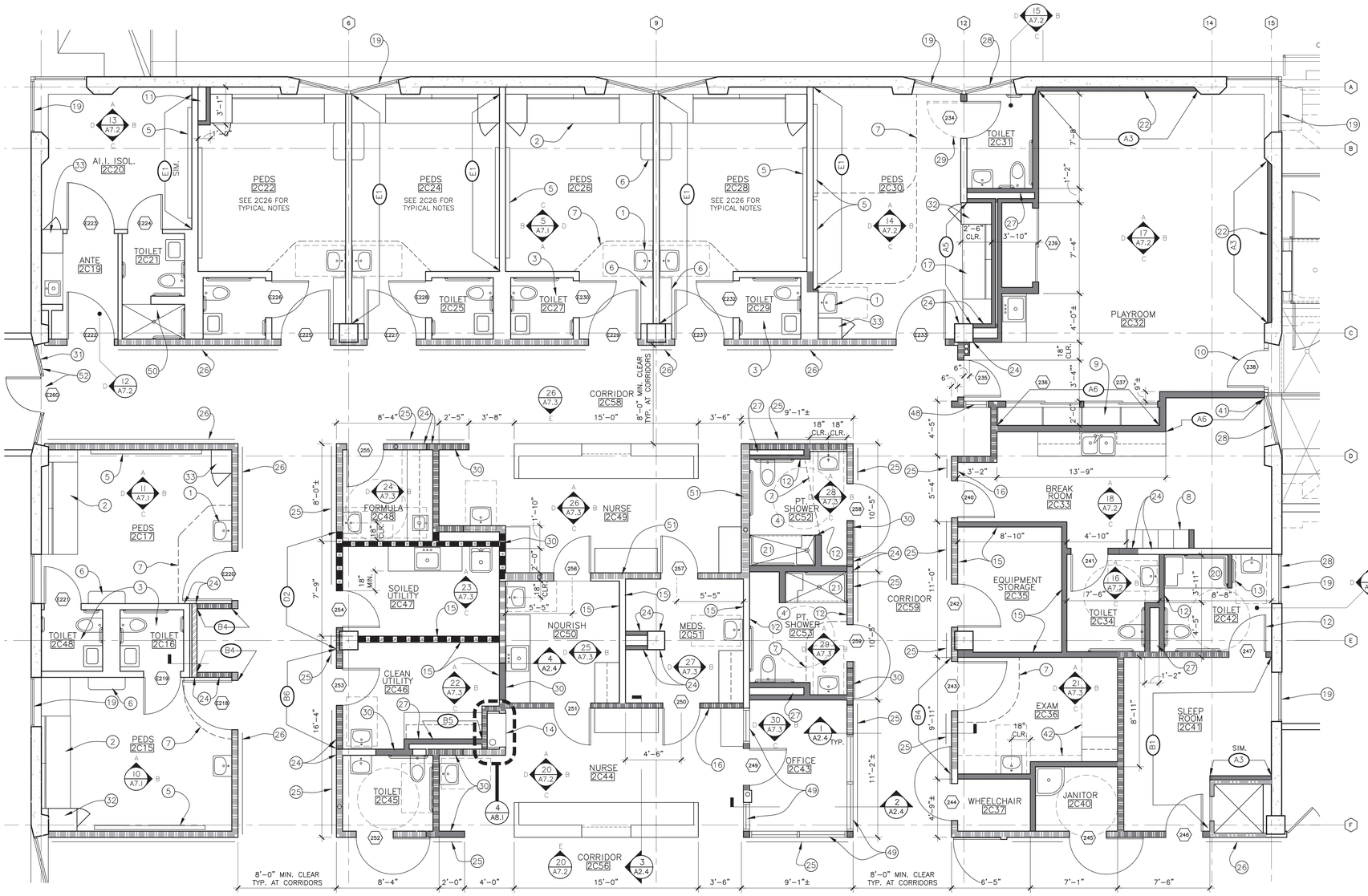

A PARTIAL SECOND FLOOR PLAN - NORTH

SCALE 1/4" : 1'-0"

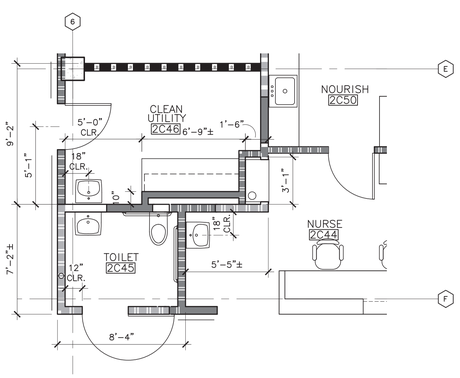

A2 2C45-2C46 DIMENSION PLAN

SCALE 1/4" : 1'-0"

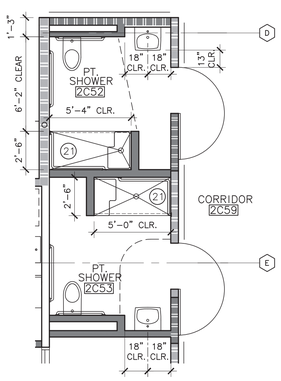

A1 2C52-2C53 DIMENSION PLAN

SCALE 1/4" : 1'-0"

NOTE LEGEND

1. HANDWASH FIXTURE PER PLUMBING DRAWINGS; TYPICAL AT ALL PEDS ROOMS. SEE PLUMBING DRAWINGS.
2. 90" LONG DAYBED AND SIDE TABLE WITH 21" WIDE BUILT-IN WARDROBE U.N.O.; SEE INTERIOR ELEVATIONS. TYPICAL WHERE SHOWN AT ALL PEDS ROOMS U.N.O. SEE DETAILS 8-13, SHEET A9.2.
3. REMOVE AND RE-INSTALL EXISTING PLUMBING FIXTURES, GRAB BARS, AND OTHER FIXTURES AS REQUIRED FOR NEW TOILET ROOM WALL FINISHES; TYPICAL AT EXISTING TOILET ROOMS.
4. SEE INTERIOR ELEVATIONS AND SHEET A9.1 FOR TOILET ACCESSORIES AND PLUMBING FIXTURES AT TOILET/SHOWER ROOMS.
5. AMICO HORIZONTAL HEADWALL ASSEMBLY; SEE INTERIOR ELEVATIONS AND DETAIL 6/A8.1.
6. WALL-MOUNTED 12" DEEP COUNTERTOP AT +30". SIM. TO DETAIL 5/A9.2.
7. CUBICLE CURTAIN TRACK ABOVE.
8. PREFAB 3-TIER LOCKERS WITH METAL BASE. SCREW LOCKERS TO 16 GA. BACKING IN WALL WITH #12 SCREWS AT 12" O.C., TOP AND BOTTOM.
9. ADJUSTABLE SHELVES INSIDE CLOSET PER INTERIOR ELEVATIONS.
10. ALUMINUM STOREFRONT FRAME AND DOOR AT OPENING TO REPLACE DEMOLISHED WINDOW AND BULKHEAD WALL BELOW.
11. CHASE FOR LOW RETURN AIR DUCT; SEE MECHANICAL DRAWINGS. SET BOTTOM OF REGISTER AT +8" A.F.F.
12. COAT HOOK AT +54"
13. TOWEL BAR AT +48"
14. PNEUMATIC TUBE STATION; SEE DETAIL 4/A8.1.
15. UNISTRUT BACKING FOR ROLLING WIRE SHELVING RESTRAINTS; SEE DETAIL 3/A8.1.
16. LOCATE DOOR OPENING TO PROVIDE 18" CLEARANCE FROM DOOR EDGE TO WALL.
17. DAYBED, TABLE, AND WARDROBE PER NOTE 2 ABOVE EXCEPT SLEEPER COUCH TO BE 73" LONG.
18. (NOT USED)
19. MODIFY EXISTING WINDOWS TO REMOVE INTERNAL LOUVERED BLINDS; FASTEN WINDOW IN THE CLOSED POSITION. TYPICAL AT ALL EXTERIOR WINDOWS AT FAINER WING 2ND FLOOR. PAINT FRAMES PROCESS "S".
20. PREFAB ACCESSIBLE SHOWER ENCLOSURE; SEE INTERIOR ELEVATIONS. VERIFY EXACT WALL FRAMING DIMENSIONS WITH MANUFACTURER'S INSTALLATION INSTRUCTIONS. SEE DETAIL 8/A9.1.
21. CERAMIC TILE ACCESSIBLE SHOWER; SEE INTERIOR ELEVATIONS AND DETAILS 1/A8.3 & 8/A9.1. COORDINATE EXACT LOCATION OF FLOOR DRAIN WITH DUCTS AND OTHER POSSIBLE OBSTRUCTIONS AT FLOOR BELOW.
22. FURRED WALL TYPE A3; HOLD BACK OF FRAMING TIGHT TO WALL.
23. (NOT USED)
24. ALIGN NEW AND EXISTING FRAMING/FINISH.
25. HANDRAIL SYSTEM WITH VINYL COVERED ALUMINUM RAILS AND BRACKETS - TYPICAL AT NEW CORRIDOR WALLS. SEE DETAIL 7/A8.1.
26. RE-INSTALL REMOVED HANDRAILS WITH NEW COVERS, BRACKETS, AND END CAPS. TYP. WHERE WALLS BEHIND HANDRAILS ARE EXISTING TO REMAIN.
27. DOUBLE-STUD WALL FOR TOILET SUPPORTS; SEE GENERAL NOTE B BELOW.
28. PRIOR TO INTERIOR FRAMING, APPLY TRANSLUCENT WINDOW FILM, 3M #SH2MAML OR EQUAL, TO INTERIOR FACE OF WINDOW GLAZING.
29. DOOR HARDWARE ALLOWS EMERGENCY OUTSWING FUNCTION.
30. INFILL EXISTING DOOR OPENING WITH FRAMING AND FINISH PER WALL TYPE.
31. TACTILE EXIT SIGN READING "EXIT ROUTE" PER DETAIL 9/A9.1.
32. 20"W. x 30"D. PLASTIC LAMINATE CASEWORK WARDROBE.
33. 20"W. X 23"D. PLASTIC LAMINATE CASEWORK WARDROBE. AT ROOM 2C20, VERIFY EXISTING WIDTH OF FRAMED OPENING FOR WARDROBE.

34-40 (NOT USED)

41. LOCATE WALL TO CLEAR EXISTING WINDOW SWING; SEE DETAIL 2/A8.2.
42. EXTENT OF 8' x 10' CLEAR FLOOR SPACE IN EXAM ROOM.
43. (NOT USED)

44 GLAZING AND FRAMING SYSTEM, 45-MINUTE RATED WITH HOSE-STREAM TEST COMPLIANCE. TOP OF HEAD AT +7'-2", BOTTOM OF SILL AT +3'-4".

45. TEMPERED GLAZING IN HOLLOW METAL FRAME. OUTSIDE OF FRAME: 24" WIDE x 46" HIGH; TOP OF HEAD AT +7'-2".
47. WALL PER WALL TYPE INDICATED EXCEPT 6" STUDS.
48. TEMPERED GLASS WINDOW IN HOLLOW METAL FRAME. 24"W. x 46" H. OUTSIDE FRAME DIMENSIONS, WITH TOP OF FRAME AT +7'-2". SEE DETAIL 5/A8.2.
49. FIRE RATED STOREFRONT WITH 60-MINUTE WALL RATING. STOREFRONT SHALL BE 46" HEIGHT TO OUTSIDE OF FRAME, WITH TOP OF FRAME AT +7'-2". SEE DETAIL 4/A8.2.
50. EXISTING CERAMIC TILE TO REMAIN AT SHOWER FLOOR AND WALLS; PROVIDE CERAMIC TILE FLOOR AND WALL FINISH IN BALANCE OF ROOM 2C21.
51. AT EXISTING FIRE PARTITIONS, PROVIDE GYPSUM BOARD FINISH AT WALL TYPE B1 PER NOTE 24/A6.2 WHERE EXISTING STUDS DO NOT HAVE GYPSUM BOARD ON BOTH SIDES ABOVE EXISTING CEILINGS. TYPICAL AT SOUTH AND EAST WALLS OF NURSE 2C49.
52. PROVIDE SIGNAGE, INCLUDING BRAILLE SIGNAGE, AT DELAYED EGRESS DOOR PER CBC 1010.1.9.8. SEE DETAIL 9/A9.1 FOR BRAILLE SIGNAGE REQUIREMENTS.

WALL LEGEND

SEE SHEET A6.2 FOR WALL TYPE SECTIONS.

- NON-RATED STUD WALL, WALL TYPE A1 U.N.O.
- NON-RATED DOUBLE-STUD WALL, WALL TYPE A2 U.N.O.
- ONE-HOUR RATED STUD FIRE PARTITION, WALL TYPE B1 AT NURSE STATIONS AND TYPE B3 AT CORRIDORS U.N.O.
- NON-RATED STUD WALL PARALLEL TO EXISTING ONE-HOUR RATED STUD FIRE PARTITION, WALL TYPE B2 U.N.O.
- ONE-HOUR RATED STUD FIRE PARTITION WALL TYPE C1 U.N.O
- EXISTING NON-RATED STUD WALL, SIM. TO WALL TYPE A1
- EXISTING -HOUR RATED STUD PARTITION, SEE WALL TYPE D1. WALL IS CLASSIFIED AS FIRE BARRIER WITH PROTECTED OPENINGS AND PENETRATIONS AT SOILED UTILITY ROOM.
- EXISTING ONE-HOUR RATED STUD FIRE PARTITION, SIM. TO WALL TYPE B1 AT NURSE STATIONS AND B3 AT CORRIDORS U.N.O.
- EXISTING TWO-HOUR RATED FIRE BARRIER WITH METAL STUDS.
- EXISTING CONCRETE LOAD-BEARING WALL OR COLUMN
- ONE-HOUR RATED STUD FIRE BARRIER, WALL TYPE D1 AT SOILED UTILITY ROOM, U.N.O.

GENERAL NOTES

A. WALLS ARE DIMENSIONED TO FACE OF NEW STUD OR EXISTING FINISH, U.N.O

B. AT DOUBLE-STUD WALLS FOR TOILET SUPPORTS, VERIFY LOCATION OF WASTE LINE CORE THROUGH FLOOR TO AVOID RE-BAR AND VERIFY WITH ENGINEER ANY ADJUSTMENTS TO FRAMING DIMENSIONS SHOWN ON PLANS. VERIFY MINIMUM WALL WIDTH FOR TOILET SUPPORT. SEE DETAIL 12/A8.2.

C. LOCATE DOORS SO THAT DOUBLE JAMB STUDS AT HINGE SIDE ARE TIGHT TO ADJACENT WALL FRAMING; TYPICAL WHERE ADJACENT WALL OCCURS, U.N.O.

D. SEE SHEET A9.1 FOR TYPICAL DIMENSIONS AND CLEARANCES AT ACCESSIBLE PLUMBING FIXTURES

VENTURA COUNTY HEALTH CARE AGENCY

PUBLIC VENTURA COUNTY WORKS

ENGINEERING SERVICES

RASMUSSEN & ASSOCIATES
Architecture
Planning
Interiors
21 S. California Street
Fourth Floor
Ventura, California 93001
(805) 648-1234

PROFESSIONAL SEALS

LICENSED ARCHITECT JAY LOMAGNO C-20256 12-31-2022 STATE OF CALIFORNIA

PERMIT APPROVAL STAMP

REVIEWED IN ACCORDANCE WITH THE REQUIREMENTS OF T24, CCR
APPROVED
Department of Health Care Access and Information
FACILITIES DEVELOPMENT DIVISION
9/28/2022, 3:17:57 PM
H202495-56-00
Laura Baldrati

PERMIT NO HCAI #H202495-56-00

NO	REVISION	DATE
△		

PUBLIC WORKS PROJECT MANAGER

CONSULTANT PROJECT MANAGER: Jay Lomagno

DRAWN BY	CHECKED BY
R&A	JJL

CONSULTANT JOB NO	DATE
A000495	06/15/2022

PROJECT TITLE AND ADDRESS

VENTURA COUNTY MEDICAL CENTER PEDIATRIC UNIT

300 HILLMONT AVE
VENTURA, CA 93003

COUNTY SPEC NUMBER: CP21-04

COUNTY PROJECT NUMBER: P6T20009

COUNTY DWG NO | SHEET 6 OF 89

SHEET TITLE: PARTIAL SECOND FLOOR PLANS

SHEET NO: A2.3

C:\Users\joe\appdata\local\temp\AcPublish_9304\Fainer 2 Peds Plans.dwg Jun 16, 2022-4:26pm

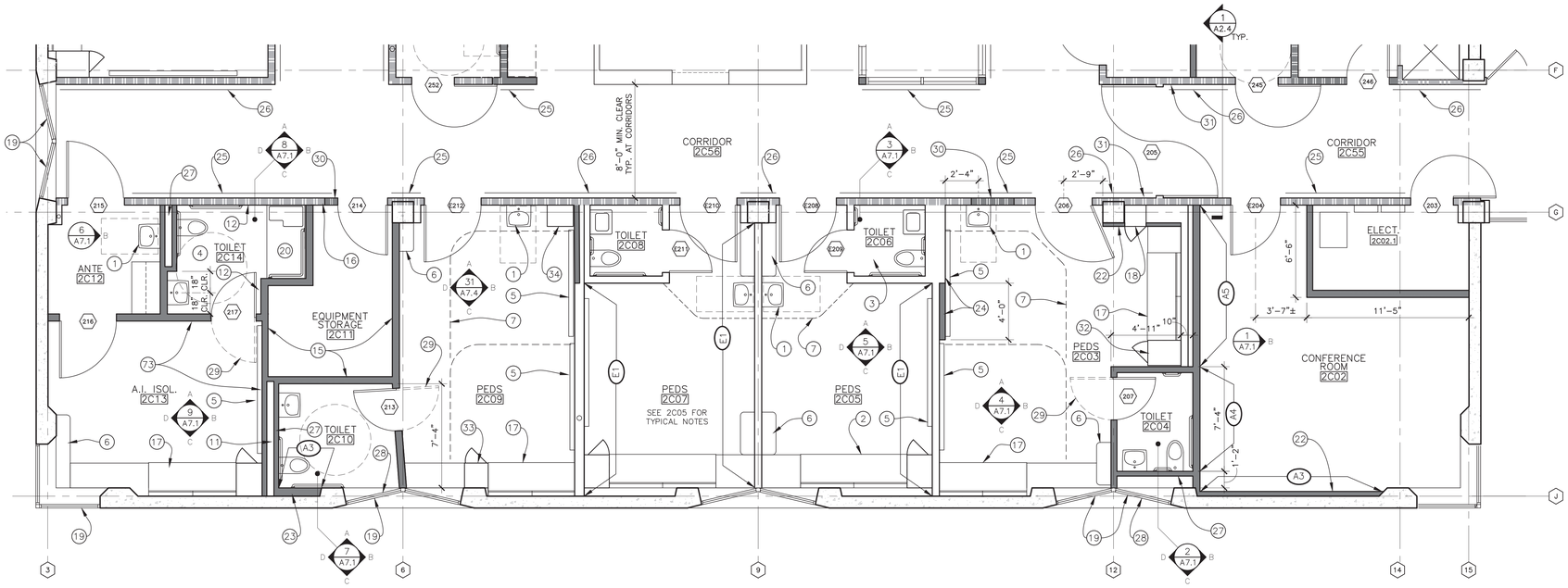

B PARTIAL SECOND FLOOR PLAN - SOUTH

SCALE 1/4" : 1'-0"

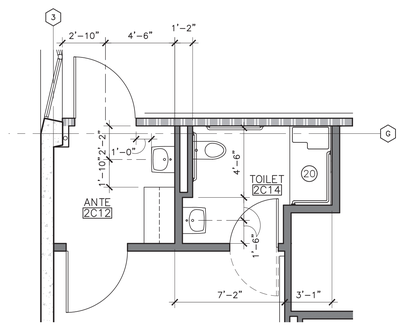

B1 2C14 DIMENSION PLAN

SCALE 1/4" : 1'-0"

NOTE LEGEND

1. HANDWASH FIXTURE PER PLUMBING DRAWINGS; TYPICAL AT ALL PEDS ROOMS. SEE PLUMBING DRAWINGS.
2. 90" LONG DAYBED AND SIDE TABLE WITH 21" WIDE BUILT-IN WARDROBE U.N.O.; SEE INTERIOR ELEVATIONS. TYPICAL WHERE SHOWN AT ALL PEDS ROOMS U.N.O. SEE DETAILS 8-13, SHEET A9.2
3. REMOVE AND RE-INSTALL EXISTING PLUMBING FIXTURES, GRAB BARS, AND OTHER FIXTURES AS REQUIRED FOR NEW TOILET ROOM WALL FINISHES; TYPICAL AT EXISTING TOILET ROOMS.
4. SEE INTERIOR ELEVATIONS AND SHEET A9.1 FOR TOILET ACCESSORIES AND PLUMBING FIXTURES AT TOILET/SHOWER ROOMS.
5. AMICO HORIZONTAL HEADWALL ASSEMBLY; SEE INTERIOR ELEVATIONS AND DETAIL 6/A8.1.
6. WALL-MOUNTED 12" DEEP COUNTERTOP AT +30". SIM. TO DETAIL 5/A9.2.
7. CUBICLE CURTAIN TRACK ABOVE.

8-10 (NOT USED)

11. CHASE FOR LOW RETURN AIR DUCT; SEE MECHANICAL DRAWINGS. SET BOTTOM OF REGISTER AT +8" A.F.F.
12. COAT HOOK AT +54"

13-14 (NOT USED)

15. UNISTRUT BACKING FOR ROLLING WIRE SHELVING; SEE DETAIL 3/A8.1.
16. LOCATE DOOR OPENING TO PROVIDE 18" CLEARANCE FROM DOOR EDGE TO WALL.
17. DAYBED, TABLE, AND WARDROBE PER NOTE 2 ABOVE EXCEPT SLEEPER COUCH TO BE 73" LONG.
18. 18" WIDE x 18" DEEP PLASTIC LAMINATE CASEWORK WARDROBE.
19. MODIFY EXISTING WINDOWS TO REMOVE INTERNAL LOUVERED BLINDS; FASTEN WINDOW IN THE CLOSED POSITION. TYPICAL AT ALL EXTERIOR WINDOWS AT FAINER WING 2ND FLOOR. PAINT FRAME PROCESS "S".
20. PREFAB ACCESSIBLE SHOWER ENCLOSURE; SEE INTERIOR ELEVATIONS. VERIFY EXACT WALL FRAMING DIMENSIONS WITH MANUFACTURER'S INSTALLATION INSTRUCTIONS. SEE DETAIL 8/A9.1.
21. (NOT USED)
22. FURRED WALL TYPE A3; HOLD BACK OF FRAMING TIGHT TO COLUMN.
23. FURRED WALL TYPE A3; SET FACE OF STUDS FLUSH WITH FACE OF CONCRETE PILASTER.
24. ALIGN NEW AND EXISTING FRAMING/FINISH.
25. HANDRAIL SYSTEM WITH VINYL COVERED ALUMINUM RAILS AND BRACKETS – TYPICAL AT NEW CORRIDOR WALLS. SEE DETAIL 7/A8.1
26. RE-INSTALL REMOVED HANDRAILS WITH NEW COVERS, BRACKETS, AND END CAPS. TYPICAL WHERE WALLS BEHIND HANDRAILS ARE EXISTING TO REMAIN.
27. DOUBLE-STUD WALL FOR TOILET SUPPORTS; SEE GENERAL NOTE B BELOW.
28. PRIOR TO INTERIOR FRAMING, APPLY TRANSLUCENT WINDOW FILM, 3M #SH2MAML OR EQUAL, TO INTERIOR FACE OF WINDOW GLAZING.
29. DOOR HARDWARE ALLOWS EMERGENCY OUTSWING FUNCTION.
30. INFILL EXISTING DOOR OPENING WITH FRAMING AND FINISH PER WALL TYPE.
31. TACTILE EXIT SIGN READING "EXIT ROUTE" PER DETAIL 9/A9.1.
32. 20"W. X 30"D. PLASTIC LAMINATE CASEWORK WARDROBE.
33. 20"W. X 23"D. PLASTIC LAMINATE CASEWORK WARDROBE. AT ROOM 2C20, VERIFY EXISTING WIDTH OF FRAMED OPENING FOR WARDROBE.
34. 24"W. X 18"D. PLASTIC LAMINATE CASEWORK WARDROBE.

35-60 (NOT USED)

61. EXISTING OR NEW ONE-HOUR FIRE PARTITION AND CEILING ASSEMBLIES PER FLOOR PLANS; WALL TYPE B3, TYPICAL U.N.O. SEE SHEET A6.2.
62. NON-RATED CEILING PER CEILING PLANS.
63. 10" THICK CONCRETE FLOOR STRUCTURE ABOVE AND BELOW.
64. ONE-HOUR RATED STOREFRONT; SEE DETAIL 4/A8.2.
65. RATED WALL FRAMING AND FINISH, SIMILAR TO WALL TYPE B1, SUSPENDED FROM FLOOR STRUCTURE ABOVE.
66. DEMOLISHED FIRE PARTITION.
67. HEADER ACROSS OPENING AT DEMOLISHED FIRE PARTITION, SEE STUD WALL FRAMING DETAILS. EXTEND ONE-HOUR RATED CEILING PER WALL TYPE B3 INTO NEW CORRIDOR ALCOVE.
68. ONE-HOUR RATED FIRE PARTITION, WALL TYPE C1, FRAMED AGAINST EXISTING TOILET WALL. SEE SHEET A6.2.
69. EXISTING RATED WALL SUSPENDED FROM ABOVE.
70. WALL TYPE B1 FROM FLOOR TO UNDERSIDE OF EXISTING RATED SOFFIT ABOVE.
71. EXISTING OR NEW ONE-HOUR FIRE PARTITION AND CEILING ASSEMBLIES PER FLOOR PLANS; WALL TYPE B1. SEE SHEET A6.2.
72. EXISTING WALL CONSTRUCTED AS ONE-HOUR PARTITION, FIRE RATING NO LONGER REQUIRED.
73. AT THIS SIDE OF NEW WALL, EXTEND GYPSUM BOARD FULL-HEIGHT TO STRUCTURE ABOVE SIMILAR TO WALL TYPE A4, TO PROVIDE FULL ATMOSPHERIC SEPARATION FROM ADJACENT SPACES. SEAL ALL PENETRATIONS WITH NON-HARDENING SEALANT.

WALL LEGEND

SEE SHEET A6.2 FOR WALL TYPE SECTIONS.

- NON-RATED STUD WALL, WALL TYPE A1 U.N.O.
- NON-RATED DOUBLE-STUD WALL, WALL TYPE A2 U.N.O.
- ONE-HOUR RATED STUD FIRE PARTITION, WALL TYPE B1 AT NURSE STATIONS AND TYPE B3 AT CORRIDORS U.N.O.
- NON-RATED STUD WALL PARALLEL TO EXISTING ONE-HOUR RATED STUD FIRE PARTITION, WALL TYPE B2 U.N.O.
- ONE-HOUR RATED STUD FIRE PARTITION WALL TYPE C1 U.N.O
- EXISTING NON-RATED STUD WALL, SIM. TO WALL TYPE A1
- EXISTING -HOUR RATED STUD PARTITION, SEE WALL TYPE D1. WALL IS CLASSIFIED AS FIRE BARRIER WITH PROTECTED OPENINGS AND PENETRATIONS AT SOILED UTILITY ROOM.
- EXISTING ONE-HOUR RATED STUD FIRE PARTITION, SIM. TO WALL TYPE B1 AT NURSE STATIONS AND B3 AT CORRIDORS U.N.O.
- EXISTING TWO-HOUR RATED FIRE BARRIER WITH METAL STUDS.
- EXISTING CONCRETE LOAD-BEARING WALL OR COLUMN

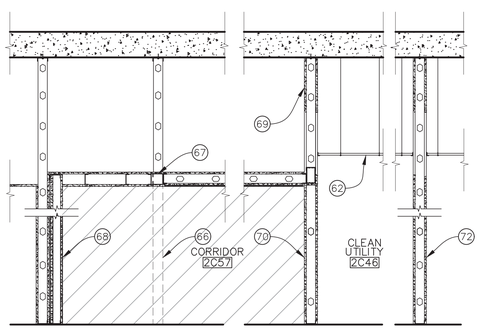

INDICATES EXTENT OF 1-HOUR CORRIDOR ENCLOSED WITH 1-HOUR RATED FIRE PARTITIONS

4 SECTION AT CORRIDOR ALCOVE & WALL INFILL UNDER SOFFIT

SCALE 1/2" : 1'-0"

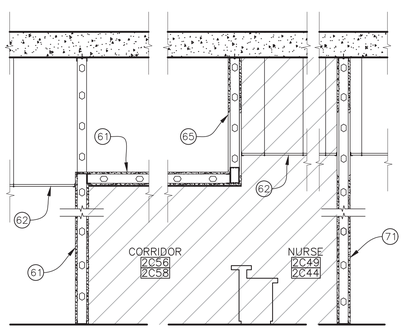

INDICATES EXTENT OF 1-HOUR CORRIDOR ENCLOSED WITH 1-HOUR RATED FIRE PARTITIONS

3 SECTION AT NURSE STATIONS OPEN TO CORRIDOR

SCALE 1/2" : 1'-0"

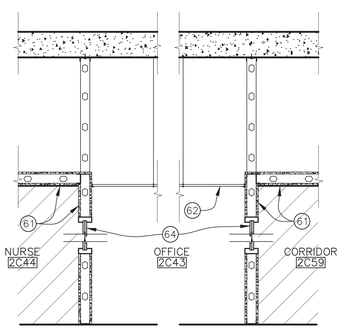

INDICATES EXTENT OF 1-HOUR CORRIDOR ENCLOSED WITH 1-HOUR RATED FIRE PARTITIONS

2 SECTION AT OFFICE 2C43

SCALE 1/2" : 1'-0"

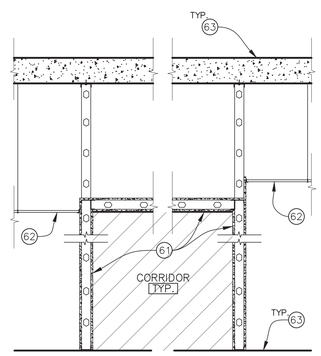

INDICATES EXTENT OF 1-HOUR CORRIDOR ENCLOSED WITH 1-HOUR RATED FIRE PARTITIONS

1 SECTION AT TYPICAL CORRIDOR

SCALE 1/2" : 1'-0"

GENERAL NOTES

A. WALLS ARE DIMENSIONED TO FACE OF NEW STUD OR EXISTING FINISH, U.N.O

B. AT DOUBLE-STUD WALLS FOR TOILET SUPPORTS, VERIFY LOCATION OF WASTE LINE CORE THROUGH FLOOR TO AVOID RE-BAR AND VERIFY WITH ENGINEER ANY ADJUSTMENTS TO FRAMING DIMENSIONS SHOWN ON PLANS. VERIFY MINIMUM WALL WIDTH FOR TOILET SUPPORT. SEE DETAIL 12/A8.2.

C. LOCATE DOORS SO THAT DOUBLE JAMB STUDS AT HINGE SIDE ARE TIGHT TO ADJACENT WALL FRAMING; TYPICAL WHERE ADJACENT WALL OCCURS, U.N.O.

D. SEE SHEET A9.1 FOR TYPICAL DIMENSIONS AND CLEARANCES AT ACCESSIBLE PLUMBING FIXTURES

VENTURA COUNTY HEALTH CARE AGENCY

PUBLIC WORKS VENTURA COUNTY

ENGINEERING SERVICES

RASMUSSEN & ASSOCIATES
Architecture
Planning
Interiors
21 S. California Street
Fourth Floor
Ventura, California 93001
(805) 648-1234

PROFESSIONAL SEALS

PERMIT APPROVAL STAMP

REVIEWED IN ACCORDANCE WITH THE REQUIREMENTS OF T24, CCR
APPROVED
Department of Health Care Access and Information
FACILITIES DEVELOPMENT DIVISION
9/28/2022, 3:17:57 PM
H202495-56-00
Laura Baldrati

PERMIT NO HCAI #H202495-56-00

NO	REVISION	DATE
△		

PUBLIC WORKS PROJECT MANAGER

CONSULTANT PROJECT MANAGER Jay Lomagno

DRAWN BY	CHECKED BY
R&A	JJL
CONSULTANT JOB NO A100495	DATE 06/15/2022

PROJECT TITLE AND ADDRESS

VENTURA COUNTY MEDICAL CENTER PEDIATRIC UNIT

300 HILLMONT AVE
VENTURA, CA 93003

COUNTY SPEC NUMBER CP21-04

COUNTY PROJECT NUMBER P6T20009

COUNTY DWG NO | SHEET 7 OF 89

SHEET TITLE

PARTIAL SECOND FLOOR PLANS

SHEET NO A2.4

NOTE LEGEND

1. LOCATIONS OF MOBILE LINEN AND WASTE BINS.
2. RECHARGE LOCATION FOR MOBILE WORKSTATION ON WHEELS.

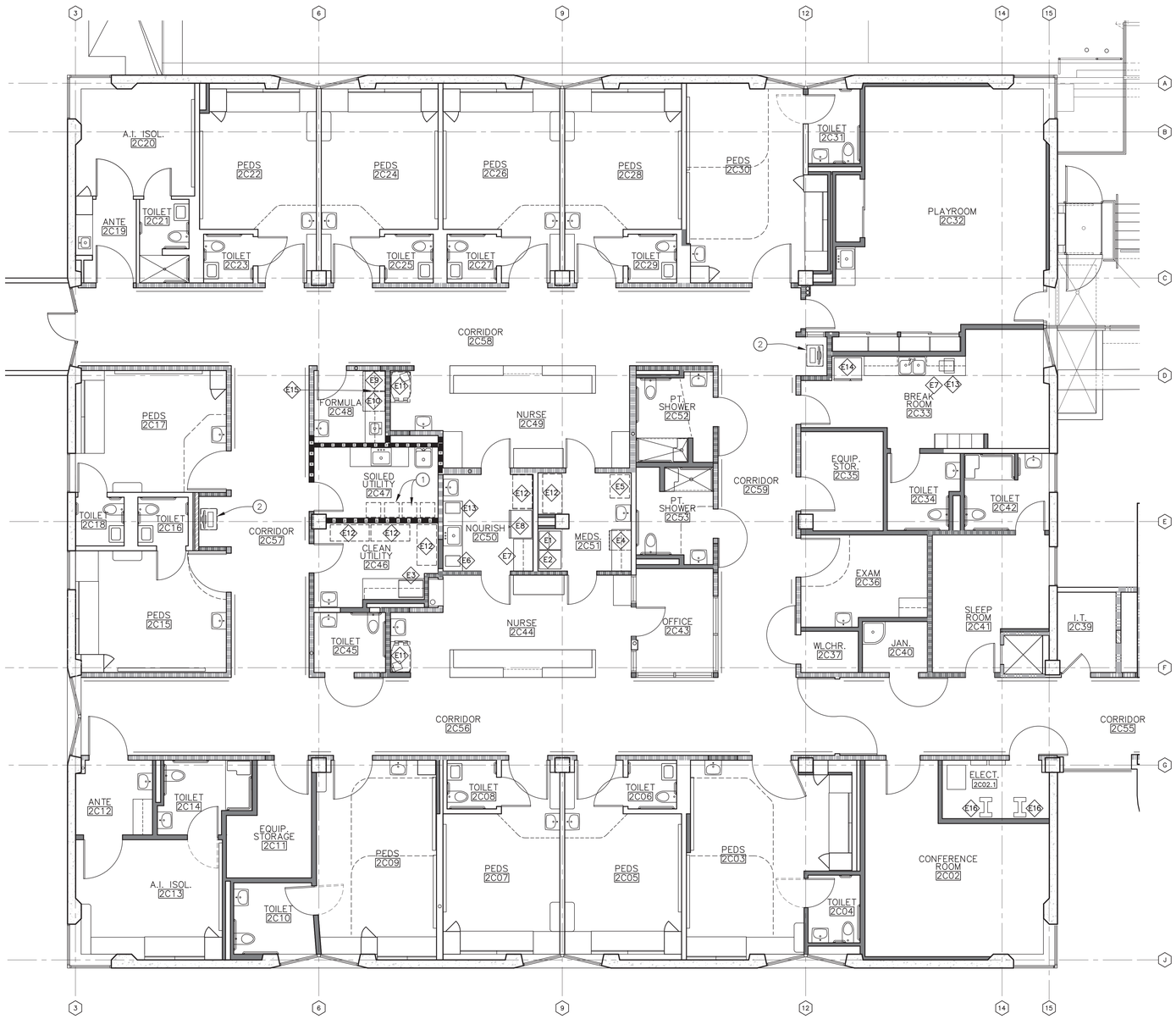

PIN 68 EQUIPMENT SCHEDULE (Equipment scheduled below is O.F.C.I.)

ID	DESCRIPTION	OPERATING WEIGHT (LBS)	WIDTH (IN)	HEIGHT (IN)	DEPTH (IN)	CENTER OF MASS (IN)	DETAIL	CLASSIFICATION: FIXED	MOVABLE	MOBILE	COUNTERTOP* ESSENTIAL	TEMPORARY	INTERIM	OTHER* ESSENTIAL	NOTES
E1	PYXIS MAIN	1050	23.0	55.0	27.0	24	2/A8.1							X	
E2	PYXIS 7-DR. AUX.	1050	23.0	47.0	27.0	24	2/A8.1							X	
E3	BLANKET WARMER	184	30.0	24.25	26.5	46	N/A				X				ON 34" HIGH COUNTER 10 P.C.F. CONTENTS WEIGHT
E4	MED REFRIG FOLLETT REF2	95	19.0	28.0	24.0	13	N/A							X	10 P.C.F. CONTENTS WEIGHT LOCATED WITHIN BASE CABINET 0.21# R-134a GROUP A1 REFRIG.
E5	MOBILE I.V. RACK	300	24.0	60.0	24.0	40	N/A			X					
E6	COUNTERTOP ICEMAKER FOLLETT E7CI100A	97	14.5	17.5	22.1	46	N/A				X				ON 34" HIGH COUNTER 0.43# R-134a GROUP A1 REFRIG.
E7	MICROWAVE	45	21.8	12.8	19.2	27	N/A				X				ON SHELF UNDER COUNTER
E8	NOURISH REFRIGERATOR PHC MODEL MPR-715F-PA/REFFZR21-GS	566	35.4	75.2	28.1	50	1A/A8.1							X	10 P.C.F. CONTENTS WEIGHT R-513a GROUP A1 REFRIGERANT: 0.26# AT FREEZER, 0.22# AT REF.
E9	UNDERCOUNTER REFRIG FOLLETT REF4P	215	24.0	31.63	24.75	21	5/A8.1							X	10 P.C.F. CONTENTS WEIGHT LOCATED WITHIN BASE CABINET 0.56# R-134a GROUP A1 REFRIG.
E10	UNDERCOUNTER FOLLETT REF4P	215	24.0	31.63	24.75	21	5/A8.1							X	10 P.C.F. CONTENTS WEIGHT LOCATED WITHIN BASE CABINET 0.63# R-404a GROUP A1 REFRIG.
E11	RESUSCITATION CART	200	36.75	43.75	22.00	30	N/A			X					
E12	WIRE RACK SHELVING	487	48.0	69.0	24.0	46	3/A8.1			X					MAX 2' x 4' WITH 4 SHELVES 10 P.C.F. CONTENTS WEIGHT
E13	COFFEEMAKER	26	8.0	17.88	17.75	46	N/A				X				ON 34" HIGH COUNTER
E14	STAFF REFRIGERATOR FOLLET REF12	537	27.00	81	29.00	55	1B/A8.1							X	10 P.C.F. CONTENTS WEIGHT 0.34# R-134a GROUP A1 REFRIG.
E15	BREAST MILK WARMER	10	10	12	10	42	N/A				X				ON 34" HIGH COUNTER
E16	SEISMIC SERVER RACK CPI 2-POST RACK	1155	24	84	15	43.7	9/A8.3	X							WEIGHT AND C.G. PER OPM-0249

* (1) WITHIN PATIENT CARE VICINITY OR BLOCKS MEANS OF EGRESS (2) PERMANENTLY ATTACHED TO UTILITIES (X) NEITHER 1 OR 2

EQUIPMENT PLAN - FAINER WING SECOND FLOOR

SCALE 3/16" : 1'-0"

0 5 10

VENTURA COUNTY HEALTH CARE AGENCY

PUBLIC VENTURA COUNTY WORKS

ENGINEERING SERVICES

RASMUSSEN & ASSOCIATES
Architecture
Planning
Interiors
21 S. California Street
Fourth Floor
Ventura, California 93001
(805) 648-1234

PROFESSIONAL SEALS

PERMIT APPROVAL STAMP

REVIEWED IN ACCORDANCE WITH THE REQUIREMENTS OF T24, CCR
APPROVED
Department of Health Care Access and Information
FACILITIES DEVELOPMENT DIVISION
9/28/2022, 3:17:57 PM
H202495-56-00
Laura Baldrati

PERMIT NO HCAI #H202495-56-00

NO	REVISION	DATE
△		

PUBLIC WORKS PROJECT MANAGER

CONSULTANT PROJECT MANAGER Jay Lomagno

DRAWN BY R&A | CHECKED BY JJL

CONSULTANT JOB NO A000495 | DATE 06/15/2022

PROJECT TITLE AND ADDRESS

VENTURA COUNTY MEDICAL CENTER PEDIATRIC UNIT

300 HILLMONT AVE
VENTURA, CA 93003

COUNTY SPEC NUMBER CP21-04

COUNTY PROJECT NUMBER P6T20009

COUNTY DWG NO | SHEET 8 OF 89

SHEET TITLE
EQUIPMENT PLAN
FAINER WING
SECOND FLOOR

SHEET NO A2.5

C:\Users\joe\appdata\local\temp\AcPublish_14400\Fainer 2 Peds Plans.dwg Jun 15, 2022-4:33pm

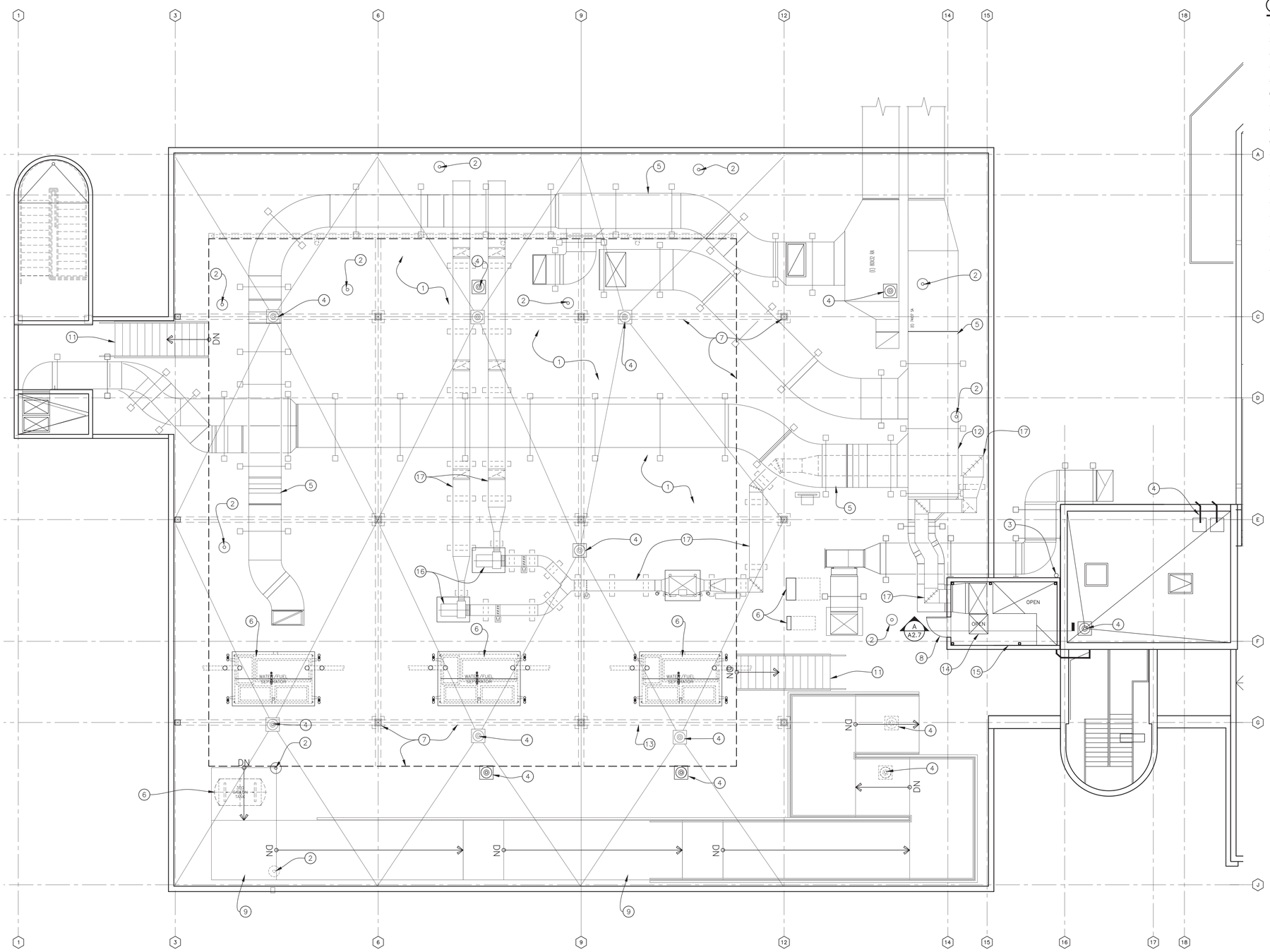

PARTIAL ROOF PLAN

SCALE 3/16" : 1'-0"

0 5 10

NOTE LEGEND

1. EXISTING ROOF SURFACE TO REMAIN. TYPICAL.
2. EXISTING VENT PIPE.
3. STORM DRAIN PIPING, SEE PLUMBING.
4. EXISTING ROOF DRAIN.
5. EXISTING DUCT TO REMAIN.
6. EXISTING EQUIPMENT TO REMAIN.
7. EXISTING HELIPAD STRUCTURE AND PLATFORM ABOVE. (APPROX. 7'-5" ABOVE ROOF LEVEL.)
8. EXISTING ACCESS DOOR TO REMAIN.
9. EXISTING WALKWAY.
10. EXISTING ABOVE ROOF PIPING UNDER HELIPAD. ACCESS CRAWL SPACE IS APPROXIMATELY 4'-0".
11. EXISTING STAIR.
12. EXISTING MECHANICAL SCREEN.
13. EXISTING TRENCH DRAIN TO REMAIN.
14. EXISTING OPENING THROUGH ROOF DECK TO REMAIN. SEE MECHANICAL DRAWINGS FOR NEW DUCTWORK.
15. EXISTING METAL FRAMED PENTHOUSE STRUCTURE TO REMAIN.
16. AIRBORNE INFECTION ISOLATION ROOM EXHAUST EQUIPMENT. SEE MECHANICAL DRAWING.
17. MECHANICAL DUCT WORK. SEE MECHANICAL DRAWINGS

VENTURA COUNTY
HEALTH CARE AGENCY

PUBLIC
VENTURA COUNTY
WORKS

ENGINEERING SERVICES

RASMUSSEN & ASSOCIATES
Architecture
Planning
Interiors
21 S. California Street
Fourth Floor
Ventura, California 93001
(805) 648-1234

PROFESSIONAL SEALS

LICENSED ARCHITECT
JAY LOMAGNO
C20801
12-31-2022
STATE OF CALIFORNIA

PERMIT APPROVAL STAMP

REVIEWED IN ACCORDANCE WITH THE REQUIREMENTS OF T24, CCR
APPROVED
Department of Health Care Access and Information
FACILITIES DEVELOPMENT DIVISION
9/28/2022, 3:17:57 PM
H202495-56-00
Laura Baldrati

PERMIT NO HCAI #H202495-56-00

NO	REVISION	DATE
△		

PUBLIC WORKS PROJECT MANAGER

CONSULTANT PROJECT MANAGER
Jay Lomagno

DRAWN BY	CHECKED BY
R&A	JJL
CONSULTANT JOB NO	DATE
A000495	06/15/2022

PROJECT TITLE AND ADDRESS

VENTURA COUNTY MEDICAL CENTER PEDIATRIC UNIT

300 HILLMONT AVE
VENTURA, CA 93003

COUNTY SPEC NUMBER
CP21-04

COUNTY PROJECT NUMBER
P6T20009

COUNTY DWG NO | SHEET 9 OF 89

SHEET TITLE
PARTIAL ROOF PLAN

SHEET NO
A2.6

C:\Users\joe\appdata\local\temp\AcPublish_14400\Fainer 2 Peds Plans.dwg Jun 15, 2022-4:33pm

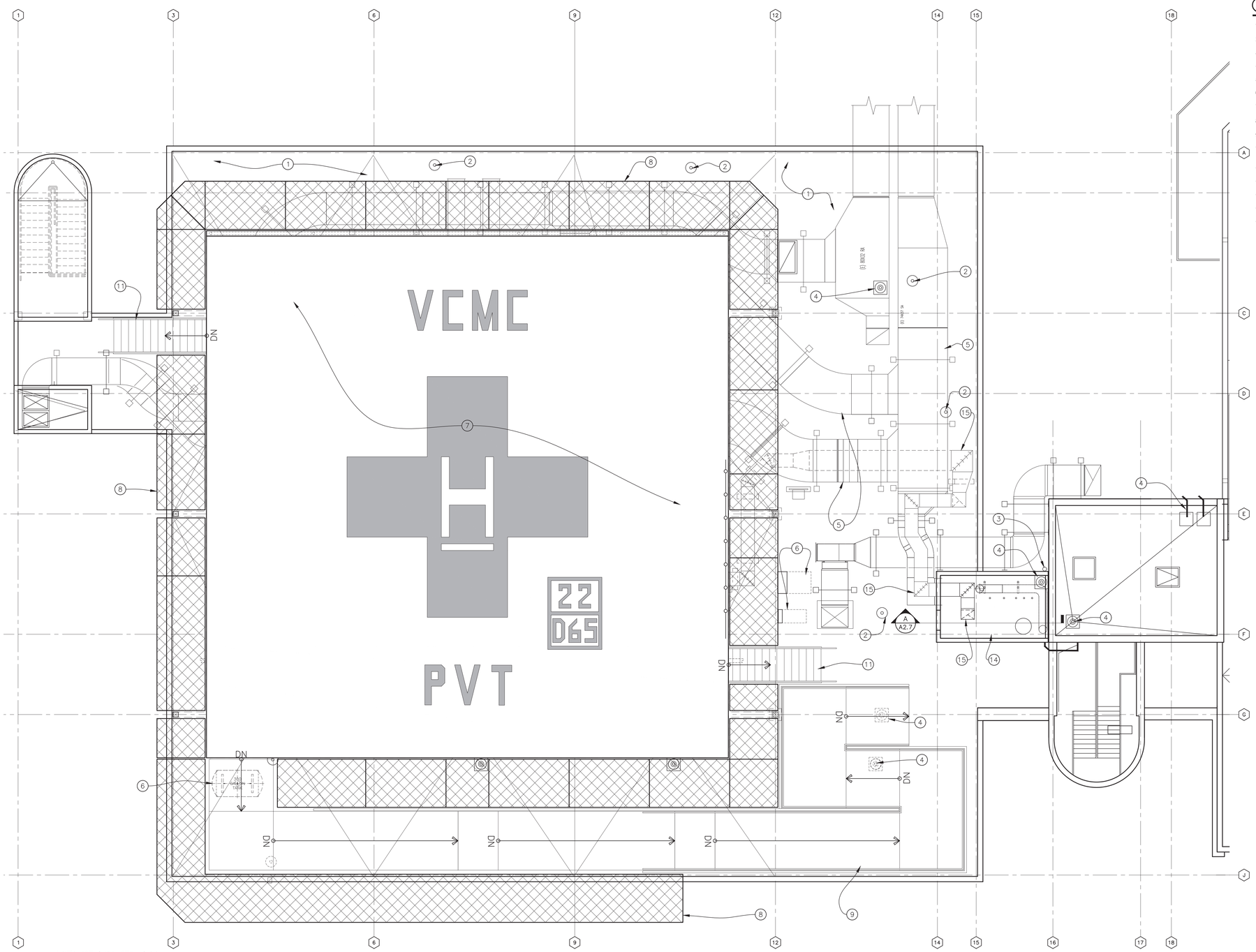

HELIPAD PLAN

SCALE 3/16" : 1'-0"

0 5 10

NOTE LEGEND

1. EXISTING ROOF SURFACE TO REMAIN. TYPICAL.
2. EXISTING VENT PIPE.
3. STORM DRAIN PIPING, SEE PLUMBING DRAWING.
4. EXISTING ROOF DRAIN.
5. EXISTING DUCT TO REMAIN.
6. EXISTING EQUIPMENT TO REMAIN.
7. EXISTING HELIPAD PLATFORM. (APPROX. 7'-5" ABOVE ROOF LEVEL.)
8. EXISTING 5'-0" WIDE SAFETY NET.
9. EXISTING WALKWAY/RAMP.
10. EXISTING ABOVE ROOF PIPING UNDER HELIPAD. ACCESS CRAWL SPACE IS APPROXIMATELY 4'-0".
11. EXISTING STAIR.
12. EXISTING ROOF VENT TO REMAIN.
13. EXISTING ROOF PENETRATIONS TO REMAIN.
14. EXISTING PENTHOUSE.
15. MECHANICAL DUCT WORK. SEE MECHANICAL DRAWINGS

VENTURA COUNTY HEALTH CARE AGENCY

PUBLIC VENTURA COUNTY WORKS

ENGINEERING SERVICES

RASMUSSEN & ASSOCIATES
Architecture
Planning
Interiors
21 S. California Street
Fourth Floor
Ventura, California 93001
(805) 648-1234

PROFESSIONAL SEALS

LICENSED ARCHITECT JAY LOMAGNO C-20801 12-31-23 STATE OF CALIFORNIA

PERMIT APPROVAL STAMP

REVIEWED IN ACCORDANCE WITH THE REQUIREMENTS OF T24, CCR
APPROVED
Department of Health Care Access and Information
FACILITIES DEVELOPMENT DIVISION
9/28/2022, 3:17:57 PM
H202495-56-00
Laura Baldrati

PERMIT NO HCAI #H202495-56-00

NO	REVISION	DATE
△		

PUBLIC WORKS PROJECT MANAGER

CONSULTANT PROJECT MANAGER
Jay Lomagno

DRAWN BY	CHECKED BY
R&A	JJL
CONSULTANT JOB NO	DATE
A000495	06/15/2022

PROJECT TITLE AND ADDRESS

VENTURA COUNTY MEDICAL CENTER PEDIATRIC UNIT

300 HILLMONT AVE
VENTURA, CA 93003

COUNTY SPEC NUMBER
CP21-04

COUNTY PROJECT NUMBER
P6T20009

COUNTY DWG NO | SHEET 10 OF 89

SHEET TITLE
HELIPAD PLAN

SHEET NO
A2.7

C:\Users\joe\appdata\local\temp\AcPublish_14400\Fainer 2 Peds Plans.dwg Jun 15, 2022-4:33pm

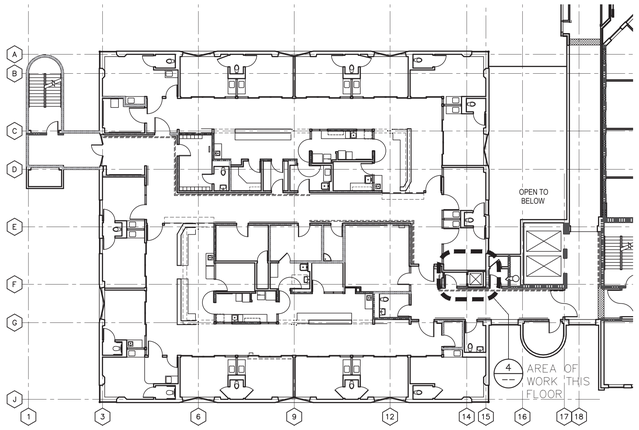

THIRD FLOOR KEY PLAN

SCALE 1/16" : 1'-0"

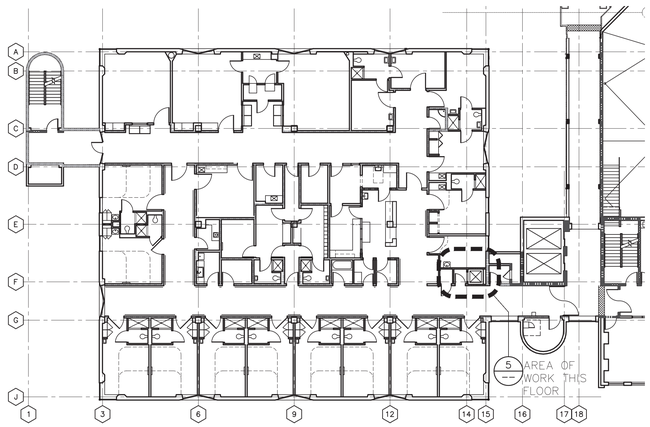

FOURTH FLOOR KEY PLAN

SCALE 1/16" : 1'-0"

5 ENLARGED FOURTH FLOOR PLAN

SCALE 1/4" : 1'-0"

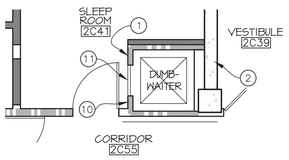

3 ENLARGED SECOND FLOOR PLAN

SCALE 1/4" : 1'-0"

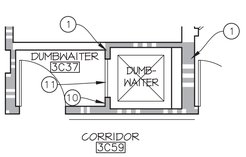

4 ENLARGED THIRD FLOOR PLAN

SCALE 1/4" : 1'-0"

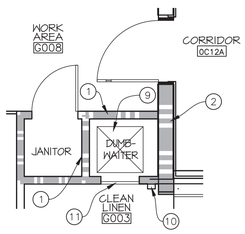

1 ENLARGED BASEMENT PLAN

SCALE 1/4" : 1'-0"

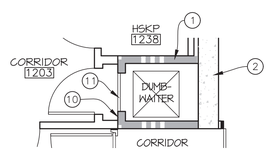

2 ENLARGED FIRST FLOOR PLAN

SCALE 1/4" : 1'-0"

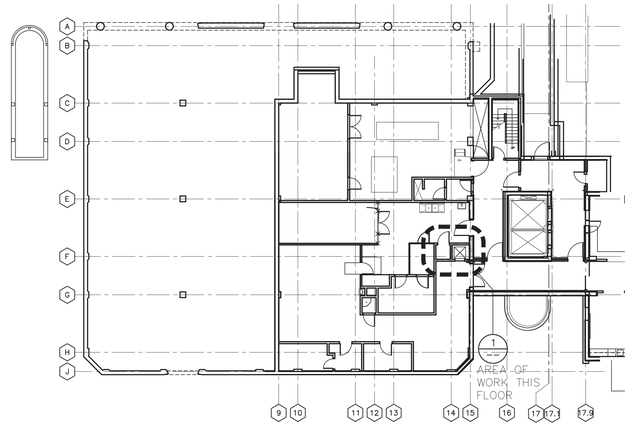

BASEMENT KEY PLAN

SCALE 1/16" : 1'-0"

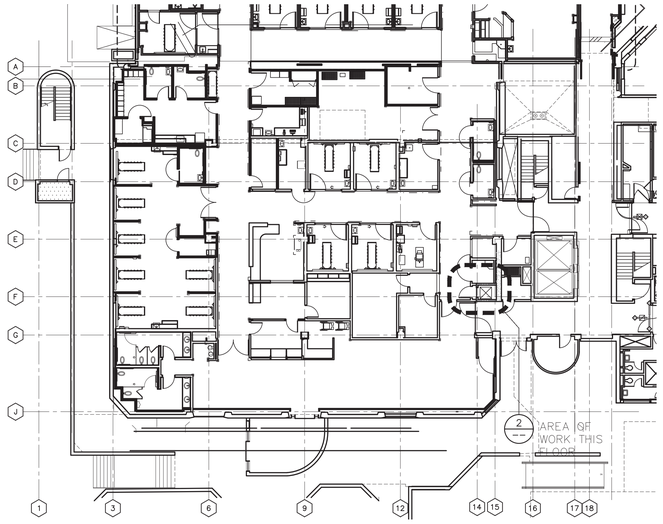

FIRST FLOOR KEY PLAN

SCALE 1/16" : 1'-0"

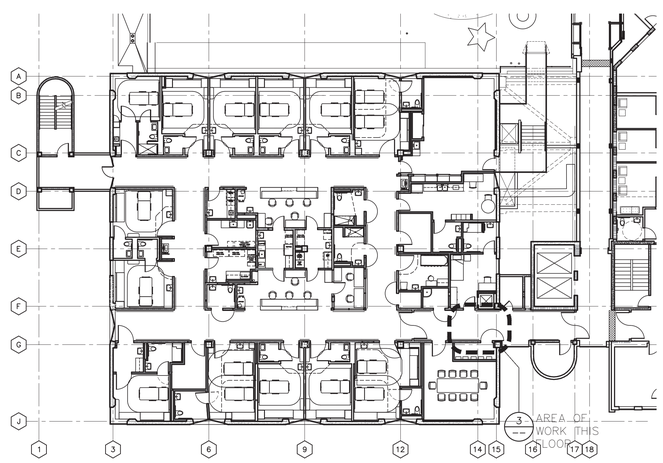

SECOND FLOOR KEY PLAN

SCALE 1/16" : 1'-0"

NOTE LEGEND

1 EXISTING 2-HOUR RATED SHAFT WALL CONSTRUCTION TO REMAIN.

2 EXISTING CONCRETE WALL TO REMAIN.

3 EXISTING 90 MINUTE RATED ACCESS DOOR TO REMAIN.

4 EXISTING NON RATED CEILING ACCESS DOOR TO REMAIN.

5 EXISTING CONCRETE FLOOR OR ROOF SLAB TO REMAIN.

6 EXISTING PENTHOUSE STRUCTURE TO REMAIN.

7 EXISTING OPENING THROUGH ROOF DECK TO REMAIN. SEE MECHANICAL DRAWINGS FOR NEW DUCTWORK IN THIS AREA.

8 EXISTING DUMBWAITER HOIST MOTOR AND SUPPORTING STRUCTURE TO BE REMOVED TO ALLOW FOR DUCTWORK TO BE INSTALLED IN THE SHAFT. DUMBWAITER HAS BEEN PREVIOUSLY DECOMMISSIONED AND ALL HOISTING CABLES HAVE BEEN REMOVED.

9 REMOVE EXISTING DUMBWAITER CAB AND ANY OTHER EQUIPMENT FOUND IN THE EXISTING SHAFT.

10 REMOVE EXISTING DUMBWAITER CALL STATION AND REPLACE WITH A BLANK COVER PLATE.

11 EXISTING 26" X 51" DUMBWAITER SHAFT DOOR TO BE REMOVED AND REPLACED WITH A 90 MINUTE RATED ACCESS DOOR WITH LATCH AND LOCK; ALL FLOORS KEYED ALIKE. ACCESS DOOR TO BE CUSTOM SIZED TO MATCH THE EXISTING OPENING. SEE DETAIL 14/A8.2. TYPICAL AT ALL FIVE FLOOR LEVELS.

GENERAL NOTES

A. ALL IMPROVEMENTS SHOWN ON THIS DRAWING ARE EXISTING TO REMAIN UNLESS OTHERWISE NOTED.

B. THE SCOPE OF WORK SHOWN ON THIS SHEET IS LIMITED TO REMOVAL OF EXISTING ABANDONED DUMBWAITER CAB AND EQUIPMENT, AND REPLACEMENT OF RATED DUMBWAITER DOORS WITH RATED ACCESS DOORS.

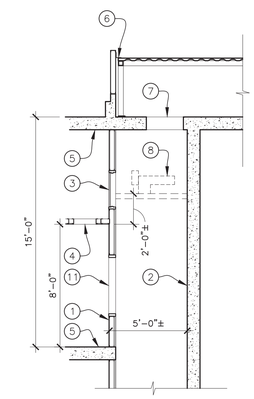

A PARTIAL SECTION: DUMBWAITER @ ROOF

SCALE 1/4" : 1'-0"

WALL LEGEND

SEE SHEET A6.2 FOR WALL TYPE SECTIONS.

- NON-RATED STUD WALL, WALL TYPE A1
- NON-RATED DOUBLE-STUD WALL, WALL TYPE A2
- ONE-HOUR RATED STUD FIRE PARTITION, WALL TYPE B3 U.N.O
- NON-RATED STUD WALL PARALLEL TO EXISTING ONE-HOUR RATED STUD FIRE PARTITION, WALL TYPE B2
- ONE-HOUR RATED STUD FIRE PARTITION WALL TYPE C1 U.N.O
- EXISTING NON-RATED STUD WALL, SIM. TO WALL TYPE A1
- EXISTING STUD RATED WALL WITH FULL-HEIGHT FINISH, SIM. TO WALL TYPE B1 OR B3 EXCEPT FIRE RATING NO LONGER REQUIRED UNDER CURRENT CODE.
- EXISTING ONE-HOUR RATED STUD FIRE PARTITION, SIM. TO WALL TYPE B1 OR B3 (B3 IS TYPICAL AT CORRIDORS U.N.O.)
- EXISTING TWO-HOUR RATED FIRE BARRIER WITH METAL STUDS.
- EXISTING CONCRETE LOAD-BEARING WALL OR COLUMN

VENTURA COUNTY HEALTH CARE AGENCY

PUBLIC WORKS VENTURA COUNTY

ENGINEERING SERVICES

RASMUSSEN & ASSOCIATES
Architecture
Planning
Interiors
21 S. California Street
Fourth Floor
Ventura, California 93001
(805) 648-1234

PROFESSIONAL SEALS

LICENSED ARCHITECT JAY LOMAGNO C-20598 12-31-2022 STATE OF CALIFORNIA

PERMIT APPROVAL STAMP

REVIEWED IN ACCORDANCE WITH THE REQUIREMENTS OF T24, CCR
APPROVED
Department of Health Care Access and Information
FACILITIES DEVELOPMENT DIVISION
9/28/2022, 3:17:57 PM
H202495-56-00
Laura Baldrati

PERMIT NO HCAI #H202495-56-00

NO	REVISION	DATE
△		

PUBLIC WORKS PROJECT MANAGER

CONSULTANT PROJECT MANAGER Jay Lomagno

DRAWN BY	CHECKED BY
R&A	JJL
CONSULTANT JOB NO A000495	DATE 06/15/2022

PROJECT TITLE AND ADDRESS

VENTURA COUNTY MEDICAL CENTER PEDIATRIC UNIT

300 HILLMONT AVE
VENTURA, CA 93003

COUNTY SPEC NUMBER CP21-04

COUNTY PROJECT NUMBER P6T20009

COUNTY DWG NO — SHEET 11 OF 89

SHEET TITLE FAINER WING ENLARGED PLANS & SECTION AT DUMBWAITER SHAFT

SHEET NO A2.8

DOOR TYPES

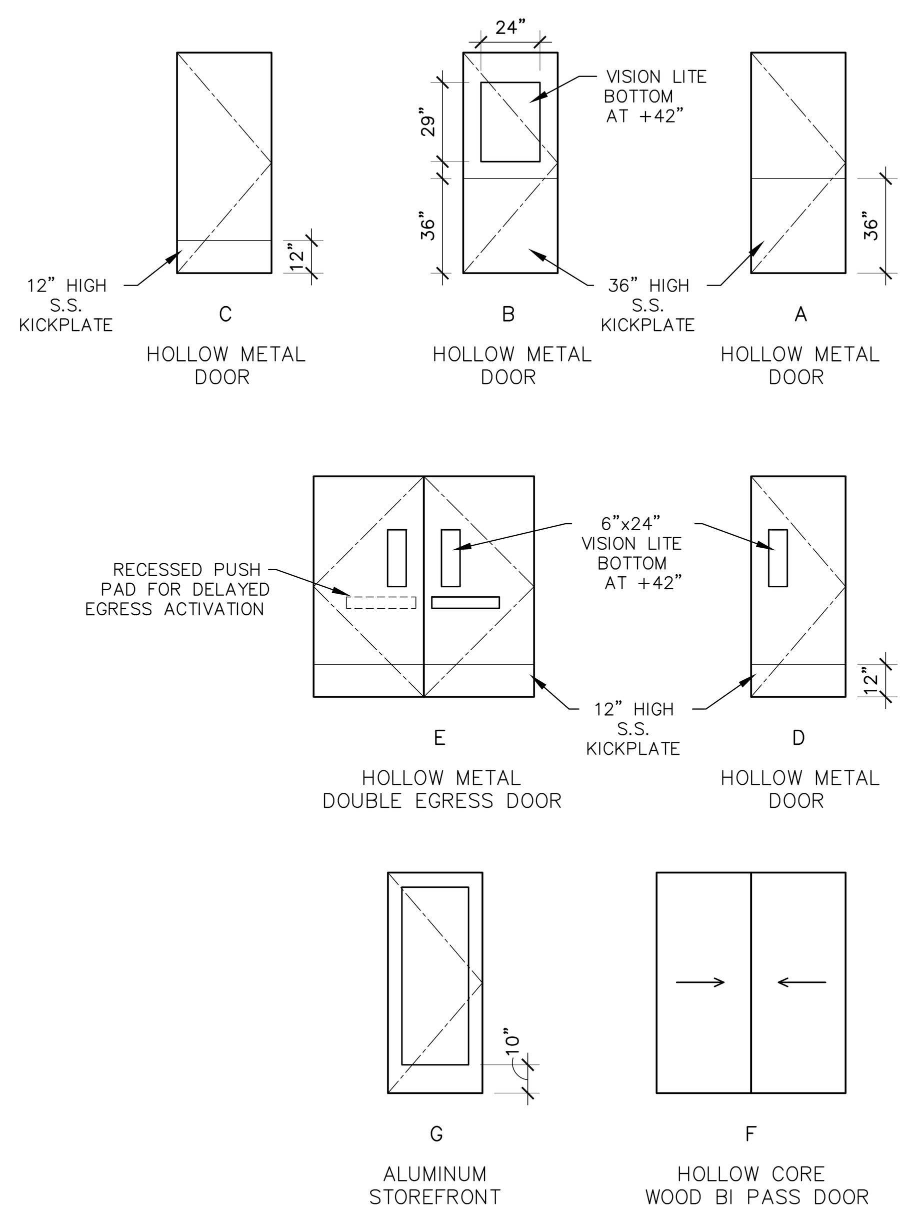

DELAYED EGRESS GENERAL NOTES

DELAYED EGRESS LOCKING SYSTEM SHALL BE SUBMITTED AS A DEFERRED APPROVAL, AND MEET ALL THE FOLLOWING REQUIREMENTS:

APPROVED, LISTED, DELAYED EGRESS LOCKS SHALL BE PERMITTED TO BE INSTALLED ON DOORS SERVING ANY OCCUPANCY EXCEPT GROUP A, E, H AND L OCCUPANCIES IN BUILDINGS THAT ARE EQUIPPED THROUGHOUT WITH AN AUTOMATIC SPRINKLER SYSTEM IN ACCORDANCE WITH SECTION 903.3.1.1 AND AN APPROVED AUTOMATIC SMOKE DETECTION SYSTEM INSTALLED IN ACCORDANCE WITH SECTION 907. DELAYED EGRESS DEVICES SHALL CONFORM TO ALL OF THE FOLLOWING:

1. THE DELAY ELECTRONICS OF THE DELAYED EGRESS LOCKING SYSTEM SHALL DEACTIVATE UPON ACTUATION OF THE AUTOMATIC SPRINKLER SYSTEM OR AUTOMATIC FIRE DETECTION SYSTEM, ALLOWING IMMEDIATE, FREE EGRESS.
2. THE DELAY ELECTRONICS OF THE DELAYED EGRESS LOCKING SYSTEM SHALL DEACTIVATE UPON LOSS OF ELECTRICAL POWER, ALLOWING IMMEDIATE FREE EGRESS TO ANY ONE OF THE FOLLOWING:
   2.1. THE EGRESS-CONTROL DEVICE ITSELF.
   2.2. THE SMOKE DETECTION SYSTEM.
   2.3. MEANS OF EGRESS ILLUMINATION AS REQUIRED BY SECTION 1008.
3. THE DELAYED EGRESS LOCKING SYSTEM SHALL HAVE THE CAPABILITY OF BEING DEACTIVATED AT THE FIRE COMMAND CENTER AND APPROVED LOCATIONS.
4. AN ATTEMPT TO EGRESS SHALL INITIATE AN IRREVERSIBLE PROCESS THAT SHALL ALLOW SUCH EGRESS IN NOT MORE THAN 15 SECONDS WHEN A PHYSICAL EFFORT TO EXIT IS APPLIED TO THE EGRESS SIDE DOOR HARDWARE FOR NOT MORE THAN 3 SECONDS. INITIATION OF THE IRREVERSIBLE PROCESS SHALL ACTIVATE AN AUDIBLE SIGNAL IN THE VICINITY OF THE DOOR. ONCE THE DELAY ELECTRONICS HAVE BEEN DEACTIVATED, REARMING THE DELAY ELECTRONICS SHALL BE BY MANUAL MEANS ONLY. THE TIME DELAY ESTABLISHED FOR EACH EGRESS-CONTROL DEVICE SHALL NOT BE FIELD ADJUSTABLE. FOR APPLICATIONS LISTED IN SECTION 1.9.1 REGULATED BY THE DIVISION OF THE STATE ARCHITECT-ACCESS COMPLIANCE, SEE CHAPTER 11B, 11B-404.2.9.
   EXCEPTION: IN FACILITIES HOUSING ALZHEIMER'S OR DEMENTIA CLIENTS, A DELAY OF NOT MORE THAN 30 SECONDS IS PERMITTED ON A DELAYED EGRESS DOOR.
5. THE EGRESS PATH FROM ANY POINT SHALL NOT PASS THROUGH MORE THAN ONE DELAYED EGRESS LOCKING SYSTEM.
   EXCEPTION: IN GROUP I-2 OR I-3 OCCUPANCIES, THE EGRESS PATH FROM ANY POINT IN THE BUILDING SHALL PASS THROUGH NOT MORE THAN TWO DELAYED EGRESS LOCKING SYSTEMS PROVIDED THE COMBINED DELAY DOES NOT EXCEED 30 SECONDS. A TACTILE SIGN SHALL ALSO BE PROVIDED IN BRAILLE AND RAISED CHARACTERS, WHICH COMPLIES WITH CHAPTER 11B, SECTIONS 11B-703.1, 11B-703.2, 11B-703.3 AND 11B-703.5.
7. EMERGENCY LIGHTING SHALL BE PROVIDED ON THE EGRESS SIDE OF THE DOOR.
8. THE DELAYED EGRESS LOCKING SYSTEM UNITS SHALL BE LISTED IN ACCORDANCE WITH UL 294.
9. ACTUATION OF THE PANIC BAR OR OTHER DOOR-LATCHING HARDWARE SHALL ACTIVATE AN AUDIBLE SIGNAL AT THE DOOR.
10. THE UNLATCHING SHALL NOT REQUIRE MORE THAN ONE OPERATION.
11. REGARDLESS OF THE MEANS OF DEACTIVATION, RELOCKING OF THE EGRESS-CONTROL DEVICE SHALL BE BY MANUAL MEANS ONLY AT THE DOOR.

DOOR HARDWARE GENERAL NOTES

1. ALL LATCHING DOORS SHALL HAVE LEVER HARDWARE OR PANIC HARDWARE.
2. 45 MINUTE RATED DOORS SHALL HAVE THE FOLLOWING HARDWARE, LISTED FOR FIRE RATED ASSEMBLIES:
   A. 1-1/2 PAIR 4-1/2" STEEL FULL MORTISE BALL BEARING HINGES.
   B. SCHLAGE ND SERIES LOCKSET OR LATCHSET, SCHLAGE AD-200 KEYPAD LOCKSET, OR EQUIVALENT.
   C. LCN 4000 SERIES CLOSERS.
3. ALL DOORS OPENING TO CORRIDORS SHALL HAVE SMOKE AND DRAFT SEALS, PEMKO S88 OR EQUAL.

ROOM FINISH SCHEDULE

ROOM NO.	ROOM NAME	CEILING			FLOOR			WALLS		REMARKS
		HEIGHT	MATERIAL	FINISH	MATERIAL	FINISH	BASE	MATERIAL	FINISH	
2C01	ELECTRICAL ROOM	EX	EX	EX	EX	EX	EX	EX	EX	
2C02.1	ELECTRICAL ROOM	8'-0"	AT	MFR	RES	MFR	SCB	GB	EG	
2C02	CONFERENCE ROOM	9'-0"	AT	MFR	RES	MFR	RTS	GB EC	EG	
2C03	PEDS	9'-0"	AT	MFR	RES	MFR	SCB	GB EC	EG	
2C04	TOILET	8'-0"	GB	S	CT	MFR	CTB	WGB	CT	
2C05	PEDS	9'-0"	AT	MFR	RES	MFR	SCB	GB EC	EG	
2C06	TOILET	EX	GB	EX	CT	MFR	CTB	GB	CT	
2C07	PEDS	9'-0"	AT	MFR	RES	MFR	SCB	GB EC	EG	
2C08	TOILET	EX	GB	EX	CT	MFR	CTB	GB	CT	
2C09	PEDS	9'-0"	AT	MFR	RES	MFR	SCB	GB EC	EG	
2C10	TOILET	9'-0"	GB	S	CT	MFR	CTB	WGB EC	CT	
2C11	EQUIPMENT STORAGE	8'-0"	AT	MFR	RES	MFR	RTS	GB	EG	
2C12	ANTE	9'-0"	AT	MFR	RES	MFR	SCB	GB EC	S	
2C13	AIRBORN INFEC. ISOLATION	9'-0"	AT2	MFR	RES	MFR	SCB	GB EC	S	
2C14	TOILET	8'-0"	GB	S	CT	MFR	CTB	WGB	CT	
2C15	PEDS	9'-0"	AT	MFR	RES	MFR	SCB	GB EC	EG	
2C16	TOILET	EX	GB	EX	CT	MFR	CTB	GB	CT	
2C17	PEDS	9'-0"	AT	MFR	RES	MFR	SCB	GB EC	EG	
2C18	TOILET	EX	GB	EX	CT	MFR	CTB	GB EC	CT	
2C19	ANTE	EX	GB	EX	RES	MFR	SCB	GB EC	S	
2C20	AIRBORN INFEC. ISOLATION	EX	EX	EX	RES	MFR	SCB	GB EC	S	
2C21	TOILET	EX	GB	EX	CT	MFR	CTB	GB	CT	EXISTING CT IN SHOWER TO REMAIN.
2C22	PEDS	9'-0"	AT	MFR	RES	MFR	SCB	GB EC	EG	
2C23	TOILET	EX	GB	EX	CT	MFR	CTB	GB	CT	
2C24	PEDS	9'-0"	AT	MFR	RES	MFR	SCB	GB EC	EG	
2C25	TOILET	EX	GB	EX	CT	MFR	CTB	GB	CT	
2C26	PEDS	9'-0"	AT	MFR	RES	MFR	SCB	GB EC	EG	
2C27	TOILET	EX	GB	EX	CT	MFR	CTB	GB	CT	
2C28	PEDS	9'-0"	AT	MFR	RES	MFR	SCB	GB EC	EG	
2C29	TOILET	EX	GB	EX	CT	MFR	CTB	GB	CT	
2C30	PEDS	9'-0"	AT	MFR	RES	MFR	SCB	GB EC	EG	
2C31	TOILET	8'-0"	GB	S	CT	MFR	CTB	WGB	CT	
2C32	PLAYROOM	9'-0"	AT	MFR	RES	MFR	RTS	GB EC	EG	
2C33	BREAK ROOM	9'-0"	AT	MFR	RES	MFR	RTS	GB EC	EG	
2C34	TOILET	8'-0"	GB	S	CT	MFR	CTB	WGB	CT	
2C35	EQUIPMENT STORAGE	8'-0"	AT	MFR	RES	MFR	RTS	GB	EG	
2C36	EXAM	9'-0"	AT	MFR	RES	MFR	SCB	GB	EG	
2C37	WHEELCHAIR	8'-0"	AT	MFR	RES	MFR	SCB	GB	EG	
2C38	N O T U S E D									
2C39	VESTIBULE	EX	GB	EX	RES	MFR	SCB	GB EC	EG	
2C40	JANITOR	8'-0"	GB	S	RES	MFR	SCB	WGB	S	CERAMIC TILE AT BACK & SIDE OF FLOOR SINK
2C41	SLEEP ROOM	9'-0"	AT	MFR	RES	MFR	RTS	GB EC	EG	
2C42	TOILET	9'-0"	GB	S	CT	MFR	CTB	WGB	CT	
2C43	OFFICE	8'-0"	AT	MFR	RES	MFR	RTS	GB	EG	
2C44	NURSE	9'-0"	AT	MFR	RES	MFR	RTS	GB	EG	
2C45	TOILET	8'-0"	GB	S	CT	MFR	CTB	WGB	CT	
2C46	CLEAN UTILITY	8'-0"	GB	S	RES	MFR	SCB	GB	S	
2C47	SOILED UTILITY	8'-0"	GB	S	RES	MFR	SCB	GB	S	
2C48	FORMULA	8'-0"	AT	MFR	RES	MFR	SCB	GB	S	
2C49	NURSE	9'-0"	AT	MFR	RES	MFR	RTS	GB	EG	
2C50	NOURISH	8'-0"	AT	MFR	RES	MFR	SCB	GB	S	
2C51	MEDS.	8'-0"	AT	MFR	RES	MFR	SCB	GB	S	
2C52	PT. SHOWER	8'-0"	GB	S	CT	MFR	CTB	WGB	CT	
2C53	PY. SHOWER	8'-0"	GB	S	CT	MFR	CTB	WGB	CT	
2C54	N O T U S E D									
2C55	CORRIDOR	EX	EX	EX	RES	MFR	RTS	GB EC	EG	
2C56	CORRIDOR	EX	EX	EX	RES	MFR	RTS	GB EC	EG	
2C57	CORRIDOR	EX	EX	EX	RES	MFR	RTS	GB	EG	
2C58	CORRIDOR	EX	EX	EX	RES	MFR	RTS	GB EC	EG	
2C59	CORRIDOR	EX	EX	EX	RES	MFR	RTS	GB	EG	

DOOR SCHEDULE

DOOR NO.	TYPE	SIZE		FINISH	DETAIL			FRAME		HARDWARE GROUP	LABEL	HARDWARE TYPE	CLOSER	SIGN	REMARKS
		WIDTH	HEIGHT		HEAD	JAMB	THRESHOLD	MATERIAL	FINISH						
E201	--	--	--	S	--	--	--	--	S	21	--	--	--	--	1
E202	C	3'-0"	7'-0"	S	--	--	--	E	S	09	N	L	Y	--	2,3,5
203	C	3'-0"	7'-0"	S	6/A8.2	6/A8.2	--	HM	S	09	N	L	Y	--	3,5
E204	D	3'-0"	7'-0"	S	--	--	--	EX	S	03	N	L	Y	--	2,5,10
205	E	7'-8"	7'-0"	S	11/A8.2	11/A8.2	--	EX	S	22	N	DA	Y	--	4 (DOUBLE EGRESS DOOR)
206	B	4'-0"	7'-0"	S	6/A8.2	6/A8.2	--	HM	S	11	N	H	N	--	5,6,7
207	C	3'-0"	7'-0"	S	3/A8.2	3/A8.2	3/A8.3	HM	S	18	N	PR	N	--	8,9
E208	B	4'-0"	7'-0"	S	--	--	--	EX	S	11	N	H	N	--	2,5,6,7
E209	C	3'-0"	7'-0"	S	--	--	3/A8.3	EX	S	15	N	PR	N	--	2,6,8
E210	B	4'-0"	7'-0"	S	--	--	--	EX	S	11	N	H	N	--	2,5,6,7
E211	C	3'-0"	7'-0"	S	--	--	3/A8.3	EX	S	15	N	PR	N	--	2,6,8
E212	B	4'-0"	7'-0"	S	--	--	--	EX	S	11	N	H	N	--	2,5,6,7
213	C	3'-0"	7'-0"	S	3/A8.2	3/A8.2	3/A8.3	HM	S	18	N	PR	N	--	8,9
214	A	3'-6"	7'-0"	S	6/A8.2	6/A8.2	--	HM	S	01	N	L	Y	--	5,10
215	B	4'-0"	7'-0"	S	6/A8.2	6/A8.2	--	HM	S	13	N	H	Y	--	5,7
216	B	4'-0"	7'-0"	S	6/A8.2	6/A8.2	--	HM	S	13	N	H	Y	--	7, 14
217	C	3'-2"	7'-0"	S	3/A8.2	3/A8.2	2/A8.3	HM	S	18	N	PR	N	--	8,9
E218	B	4'-0"	7'-0"	S	--	--	--	EX	S	14	N	H	N	--	2,5,7
E219	C	3'-0"	7'-0"	S	--	--	3/A8.3	EX	S	15	N	PR	N	--	2,6,8
E220	B	4'-0"	7'-0"	S	--	--	--	EX	S	14	N	H	N	--	2,5,7
E221	C	3'-0"	7'-0"	S	--	--	3/A8.3	EX	S	15	N	PR	N	--	2,6,8
E222	B	4'-0"	7'-0"	S	--	--	--	EX	S	12	N	H	Y	--	2,5,6,7
E223	B	4'-0"	7'-0"	S	--	--	--	EX	S	12	N	H	Y	--	2,6,7,14
E224	C	3'-0"	7'-0"	S	--	--	2/A8.3	EX	S	15	N	PR	N	--	2,6,8
E225	B	4'-0"	7'-0"	S	--	--	--	EX	S	11	N	H	N	--	2,5,6,7
E226	C	3'-0"	7'-0"	S	--	--	3/A8.3	EX	S	15	N	PR	N	--	2,6,8
E227	B	4'-0"	7'-0"	S	--	--	--	EX	S	11	N	H	N	--	2,5,6,7
E228	C	3'-0"	7'-0"	S	--	--	3/A8.3	EX	S	15	N	PR	N	--	2,6,8
E229	B	4'-0"	7'-0"	S	--	--	--	EX	S	11	N	H	N	--	2,5,6,7
E230	C	3'-0"	7'-0"	S	--	--	3/A8.3	EX	S	15	N	PR	N	--	2,6,8
E231	B	4'-0"	7'-0"	S	--	--	--	EX	S	11	N	H	N	--	2,5,6,7
E232	C	3'-0"	7'-0"	S	--	--	3/A8.3	EX	S	15	N	PR	N	--	2,6,8
E233	B	4'-0"	7'-0"	S	--	--	--	EX	S	11	N	H	N	--	2,5,6,7
234	C	3'-0"	7'-0"	S	3/A8.2	3/A8.2	3/A8.3	HM	S	18	N	PR	N	--	8,9
235	B	3'-0"	7'-0"	S	6/A8.2	6/A8.2	--	HM	S	08	N	L	Y	--	5,10
236	F	6'-0"	7'-0"	S	6/A8.2	6/A8.2	--	HM	S	23	N	--	N	--	12
237	F	6'-0"	7'-0"	S	6/A8.2	6/A8.2	--	HM	S	23	N	--	N	--	12
238	G	3'-0"	7'-0"	MFR	1/A8.2	2/A8.2	1/A8.4	AL	MFR	19	N	PAN	Y	--	11,15
239	F	6'-0"	7'-0"	S	6/A8.2	6/A8.2	--	HM	S	23	N	--	N	--	12
240	C	3'-0"	7'-0"	S	↓	↓	--	HM	S	03	N	L	Y	--	5,10
241	C	3'-0"	7'-0"	S	↓	↓	3/A8.3	HM	S	16	N	PR	Y	T	8
242	A	3'-6"	7'-0"	S	↓	↓	--	HM	S	02	N	L	Y	--	5,10,6
243	A	4'-0"	7'-0"	S	↓	↓	--	HM	S	01	N	L	Y	--	5,10
244	A	3'-0"	7'-0"	S	↓	↓	--	HM	S	04	N	L	Y	--	5,10
245	C	3'-0"	7'-0"	S	↓	↓	--	HM	S	03	N	L	Y	--	5,10
246	C	3'-0"	7'-0"	S	↓	↓	--	HM	S	03	45M	L	Y	--	5,10
247	C	3'-0"	7'-0"	S	↓	↓	2/A8.3	HM	S	17	45M	PR	Y	T	8
E248	C	3'-0"	7'-0"	S	--	--	--	EX	S	03	N	L	Y	--	2,5,10
249	C	3'-0"	7'-0"	S	6/A8.2	6/A8.2	--	HM	S	05	N	L	Y	--	5,10
250	C	3'-0"	7'-0"	S	↓	↓	--	HM	S	10	N	L	Y	--	5,6,11
251	C	3'-0"	7'-0"	S	↓	↓	--	HM	S	07	N	L	Y	--	5,6,10
252	C	3'-0"	7'-0"	S	↓	↓	3/A8.3	HM	S	17	N	PR	Y	T	5,8
253	A	3'-0"	7'-0"	S	↓	↓	--	HM	S	06	N	L	Y	--	5,6,10
254	A	3'-0"	7'-0"	S	↓	↓	--	HM	S	04	45M	L	Y	--	5,6,10
255	C	3'-0"	7'-0"	S	↓	↓	--	HM	S	03	N	L	Y	--	5,10
256	C	3'-0"	7'-0"	S	↓	↓	--	HM	S	07	N	L	Y	--	5,6,10
257	C	3'-0"	7'-0"	S	↓	↓	--	HM	S	10	N	L	Y	--	5,6, 11
258	C	3'-0"	7'-0"	S	↓	↓	2/A8.3	HM	S	17	N	PR	Y	--	5,8
259	C	3'-0"	7'-0"	S	↓	↓	2/A8.3	HM	S	17	N	PR	Y	--	5,8
E260	EX	3'-0"	7'-0"	--	--	--	--	EX	--	20	N	DA	Y	--	13: EXISTING DOOR WITH EXISTING DELAYED EGRESS HARDWARE

ROOM FINISH GENERAL NOTES

1. WALL, FLOOR AND CEILING MATERIALS SHALL NOT EXCEED THE FLAME SPREAD CLASSIFICATIONS IN C.B.C. SECTION 803.
2. CORRIDORS, ROOMS 2C02, 2C32, AND 2C33: FINISHES AT WALLS AND CEILINGS SHALL BE CLASS A OR B: FLAME SPREAD RATING NOT TO EXCEED 75, SMOKE DEVELOPED NOT TO EXCEED 450.
3. ALL OTHER ROOMS WITH AN OCCUPANT LOAD OF LESS THAN 4: FINISHES AT WALLS AND CEILINGS SHALL BE CLASS A, B, OR C: FLAME SPREAD RATING NOT TO EXCEED 200, SMOKE DEVELOPED NOT TO EXCEED 450.
4. INTERIOR FLOOR FINISH AND FLOOR COVERING MATERIALS SHALL COMPLY WITH C.B.C. 804.1 THROUGH 804.4.2. CARPET SHALL ALSO COMPLY WITH C.B.C. 11B-302.2.

ROOM FINISH SCHEDULE ABBREVIATIONS

AT	ACOUSTIC TILE – FINE FISSURED	MFR	MANUFACTURER'S STANDARD FINISH
AT2	ACOUSTIC TILE – SMOOTH & WASHABLE	N	NO OR NONE
C	CONCRETE FLOOR-SEALED	RES	RESILIENT SHEET VINYL
CT	CERAMIC TILE	RTS	RESILIENT TOPSET BASE
CTB	CERAMIC TILE COVED BASE	RW	RESILIENT WAINSCOT
EC	EXISTING CONCRETE	SCB	SELF COVE BASE
EG	PAINT PROCESS "EG" EGGSHELL	S	PAINT PROCESS "S" SEMI-GLOSS
EX	EXISTING TO REMAIN	WGB	WATER RESISTANT GYPSUM BOARD
GB	GYPSUM BOARD – NEW OR EXISTING	Y	YES

DOOR SCHEDULE ABBREVIATIONS

45M	45 MINUTE RATED	PAN	PANIC HARDWARE
AL	ALUMINUM	PR	PRIVACY LATCHSET
DA	DELAYED EGRESS PANIC HARDWARE	S	PAINT PROCESS "S" SEMI-GLOSS
E	EXIT SIGNAGE (TACTILE)	T	TOILET ROOM SIGNAGE, SEE SHT. A9.1
EX	EXISTING TO REMAIN	WD	WOOD
H	HOSPITAL HANDLE LATCHSET	Y	YES
HC	ACCESSIBLE SIGN, SEE SHEET A9.1		
HM	HOLLOW METAL		
L	LOCKSET		
MFR	MANUFACTURER'S STANDARD FINISH		
N	OR NONE		
P	PASSAGE LATCHSET		

DOOR REMARKS LEGEND

1 EXISTING DOOR TO REMAIN. REPAINT DOOR & FRAME.
2 NEW DOOR IN EXISTING FRAME.
3 KEY ACCESS ONLY.
4 MAGNETIC LOCKS AT BOTH LEAVES WITH DELAYED EGRESS FUNCTION PER CBC 1010.1.9.8; ACCESS CONTROL SYSTEM RELEASES LOCKS AND ACTIVATES POWER DOOR OPERATORS. SEE KEY NOTE 24/A2.2.
5 SMOKE SEALS.
6 OVERHEAD STOP.
7 HOSPITAL TYPE LATCH.
8 PRIVACY INDICATOR.
9 PIVOT HINGES WITH EXTERIOR STOP RELEASE.
10 KEYPAD LOCK
11 ELECTRIC STRIKE TO ALLOW ENTRANCE VIA BADGE READER
12 BYPASS DOOR HARDWARE
13 DELAYED EGRESS PANIC HARDWARE, PER CBC 1010.1.9.8
14 8"x18" LOUVERED VENT, BOTTOM 12" ABOVE THE FLOOR
15 DOOR PROVIDES FREE INGRESS FROM ROOF DECK; ACCESS CONTROL RESTRICTS PASSAGE FROM ROOM TO ROOF DECK

VENTURA COUNTY
HEALTH CARE AGENCY

PUBLIC VENTURA COUNTY WORKS
ENGINEERING SERVICES

RASMUSSEN & ASSOCIATES
Architecture
Planning
Interiors
21 S. California Street
Fourth Floor
Ventura, California 93001
(805) 648-1234

PROFESSIONAL SEALS

PERMIT APPROVAL STAMP
REVIEWED IN ACCORDANCE WITH THE REQUIREMENTS OF T24, CCR
APPROVED
Department of Health Care Access and Information
FACILITIES DEVELOPMENT DIVISION
9/26/2022, 3:17:57 PM
H202495-56-00
Laura Baldrati

PERMIT NO HCAI #H202495-56-00

NO	REVISION	DATE
1	HCAI RESUBMITTAL	09/19/2022

PUBLIC WORKS PROJECT MANAGER
CONSULTANT PROJECT MANAGER Jay Lomagno
DRAWN BY R&A | CHECKED BY JJL
CONSULTANT JOB NO A000495 | DATE 06/15/2022
PROJECT TITLE AND ADDRESS

VENTURA COUNTY MEDICAL CENTER PEDIATRIC UNIT

300 HILLMONT AVE
VENTURA, CA 93003

COUNTY SPEC NUMBER CP21-04
COUNTY PROJECT NUMBER P6T20009
COUNTY DWG NO | SHEET 12 OF 89
SHEET TITLE SCHEDULES
SHEET NO A4.1

DEMOLITION REFLECTED CEILING PLAN - FAINER WING SECOND FLOOR

SCALE 3/16" : 1'-0"

0 5 10

NOTE LEGEND

1. EXISTING GYPSUM BOARD CEILING TO REMAIN; TYPICAL U.N.O. AT EXISTING PATIENT TOILET ROOMS AND ADJACENT SOFFIT INSIDE PATIENT ROOM DOOR.
2. DEMOLISH EXISTING GYPSUM BOARD CEILING.
3. DEMOLISH EXISTING ACOUSTIC GRID CEILINGS; TYPICAL IN AREA OF REMODEL.
4. AT EXISTING RATED CORRIDOR CEILINGS, REMOVE EXISTING GLUE-ON CEILING TILE; FIRE RATED GYPSUM BOARD SUBSTRATE TO REMAIN. TYPICAL.
5. EXISTING RATED ACCESS DOOR TO REMAIN. TYPICAL AT EXISTING CORRIDORS.
6. EXISTING CEILING TO REMAIN.
7. DEMOLISH EXISTING LINEAR METAL CEILING.
8. EXISTING SHAFTS TO REMAIN.
9. DEMOLISH SOFFIT ABOVE DEMOLISHED WARDROBE CASEWORK. SEE DETAIL 10/A8.3.

GENERAL NOTES

A. SEE ELECTRICAL AND MECHANICAL DRAWINGS FOR EXTENT OF DEMOLITION FOR THOSE TRADES.

VENTURA COUNTY HEALTH CARE AGENCY

PUBLIC VENTURA COUNTY WORKS

ENGINEERING SERVICES

RASMUSSEN & ASSOCIATES
Architecture
Planning
Interiors
21 S. California Street
Fourth Floor
Ventura, California 93001
(805) 648-1234

PROFESSIONAL SEALS

LICENSED ARCHITECT JAY LOMAGNO 20801 12-31-22 STATE OF CALIFORNIA

PERMIT APPROVAL STAMP

REVIEWED IN ACCORDANCE WITH THE REQUIREMENTS OF T24, CCR
APPROVED
Department of Health Care Access and Information
FACILITIES DEVELOPMENT DIVISION
9/28/2022, 3:17:57 PM
H202495-56-00
Laura Baldrati

PERMIT NO HCAI #H202495-56-00

NO	REVISION	DATE
△		

PUBLIC WORKS PROJECT MANAGER

CONSULTANT PROJECT MANAGER
Jay Lomagno

DRAWN BY	CHECKED BY
R&A	JJL
CONSULTANT JOB NO	DATE
A000495	06/15/2022

PROJECT TITLE AND ADDRESS

VENTURA COUNTY MEDICAL CENTER PEDIATRIC UNIT

300 HILLMONT AVE
VENTURA, CA 93003

COUNTY SPEC NUMBER
CP21-04

COUNTY PROJECT NUMBER
P6T20009

COUNTY DWG NO | SHEET 13 OF 89

SHEET TITLE DEMOLITION REF. CEILING PLAN FAINER WING SECOND FLOOR

SHEET NO A5.0

C:\Users\joe\appdata\local\temp\AcPublish_14400\Fainer 2 Peds Plans.dwg Jun 15, 2022-4:34pm

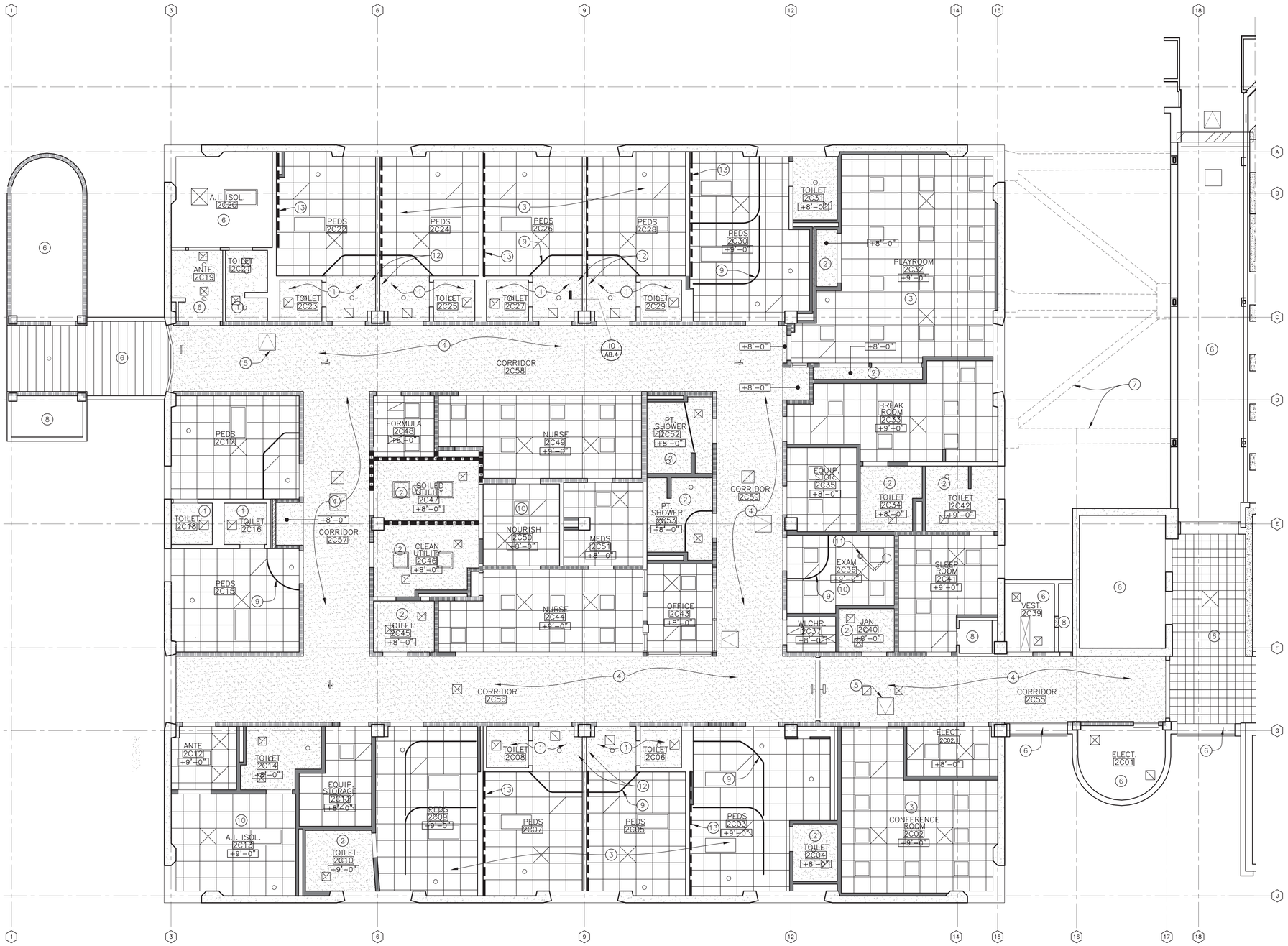

REFLECTED CEILING PLAN - FAINER WING SECOND FLOOR

SCALE 3/16" : 1'-0"

0 5 10

NOTE LEGEND

1. EXISTING GYPSUM BOARD CEILING TO REMAIN; TYPICAL U.N.O. AT EXISTING PATIENT TOILET ROOMS AND ADJACENT SOFFIT INSIDE PATIENT ROOM DOOR.
2. GYPSUM BOARD CEILING.
3. 2'x2' ACOUSTIC CEILING GRID CEILING WITH FINE-FISSURED TILES; TYPICAL WHERE SHOWN U.N.O..
4. AT CORRIDOR CEILINGS, APPLY ONE LAYER OF 1/2" GYPSUM BOARD TO REPLACE REMOVED LAYER OF ACOUSTIC TILE. SEE DETAIL 10/A8.2 FOR PATCHING OF ANY HOLES IN, OR DAMAGE TO, THE RATED GYPSUM BOARD FINISH AT TOP AND BOTTOM OF CEILING JOISTS.
5. EXISTING RATED ACCESS DOOR TO REMAIN. TYPICAL AT EXISTING CORRIDORS. SEE ELECTRICAL, MECHANICAL, AND PLUMBING DRAWINGS FOR LOCATIONS WHERE ADDITIONAL ACCESS PANELS ARE REQUIRED.
6. EXISTING CEILING TO REMAIN.
7. EXISTING STRUCTURAL FRAMES AT AREA OPEN TO SKY.
8. EXISTING SHAFTS TO REMAIN.
9. SURFACE-MOUNTED TRACK FOR CUBICLE CURTAINS; TYPICAL AT EXAM ROOM AND ALL PATIENT ROOMS AS SHOWN.
10. 2'x2' ACOUSTIC CEILING GRID CEILING WITH SMOOTH WASHABLE MYLAR FACED GYPSUM CEILING TILES (TILE WEIGHT = 2.0 PSF).
11. EXAM LIGHT; SEE DETAIL 8/A8.1 AND ELECTRICAL DRAWINGS.
12. PATCH CEILING AT DEMOLISHED SOFFIT; SEE DETAIL 10/A8.3.
13. PATCH AND REPAIR EXISTING 1 PSF LEAD SHEET ABOVE CEILING TO SLAB ABOVE. SEE DETAIL 5/A8.3 FOR FASTENING BOTTOM OF LEAD SHEET AT CEILING LEVEL. TYPICAL AT EXISTING PATIENT ROOMS HEAD AND FOOT WALLS.

SUSPENDED CEILING REQUIREMENTS

SEE DETAILS 6 &7, SHEET A8.3

A. SUSPENDED CEILINGS SHALL CONFORM TO THE REQUIREMENTS FOR SEISMIC CATEGORY D, E, AND F OF C.B.C. SECTION 808 AND 1613, ASCE 7 SECTION 13.4 AND 13.5, ASTM E580 SECTION 5, ASTM C635 AND C636, AND CISCA FOR SEISMIC ZONES 3-4.

B. CEILING GRID SYSTEM SHALL BE USG DONN WITH ACM7 CLIPS AT ALL EDGES PER I.C.C. ESR 1222, OR ARMSTRONG WITH BEARC CLIPS AT ALL EDGES PER I.C.C. ESR 1308 TO QUALIFY AS THE ALTERNATIVE SEISMIC DESIGN DESCRIBED IN THEIR EVALUATION REPORTS.

C. GRID RUNNERS SHALL BE HEAVY DUTY.

D. CEILING 144 S.F. OR LESS DO NOT REQUIRE SEISMIC BRACING WIRES.

E. SPRINKLER HEADS SHALL BE INDEPENDENTLY SUPPORTED AND SHALL HAVE A 2" OVER SIZE TRIM RING OR FLEXIBLE CONNECTIONS TO HEAD.

F. CABLE TRAYS AND ELECTRICAL CONDUITS SHALL BE SUPPORTED INDEPENDENTLY OF THE CEILING.

G. LATERAL FORCE BRACING WIRES SHALL BE SPACED A MINIMUM OF 6" FROM ALL HORIZONTAL PIPING OR DUCTWORK.

H. HANGER AND BRACING WIRES SHALL BE TAUT WITHOUT CAUSING CEILING TO LIFT. WIRES SHALL BE INSTALLED IN SUCH A MANNER THAT THE DIRECTION OF THE WIRE ALIGNS WITH THE DIRECTION OF FORCES ACTING ON THE WIRE.

I. SPLICES ARE NOT ALLOWED IN HANGER OR BRACING WIRES.

GENERAL NOTES

A. SEE ELECTRICAL AND MECHANICAL DRAWINGS FOR FIXTURES, REGISTERS, ETC.

B. FIRE SPRINKLER DEFERRED APPROVAL: ALL EXISTING FIRE SPRINKLER HEADS TO BE REPLACED WITHIN AREA OF REMODEL. ALL NEW AND REPLACEMENT HEADS IN CEILINGS SHALL BE CONCEALED PENDANT TYPE.

VENTURA COUNTY HEALTH CARE AGENCY

PUBLIC WORKS VENTURA COUNTY

ENGINEERING SERVICES

RASMUSSEN & ASSOCIATES
Architecture
Planning
Interiors
21 S. California Street
Fourth Floor
Ventura, California 93001
(805) 648-1234

PROFESSIONAL SEALS

REGISTERED ARCHITECT JAY LOMAGNO C-20804 12-31-2022 STATE OF CALIFORNIA

PERMIT APPROVAL STAMP

REVIEWED IN ACCORDANCE WITH THE REQUIREMENTS OF T24, CCR
APPROVED
Department of Health Care Access and Information
FACILITIES DEVELOPMENT DIVISION
9/28/2022, 3:17:57 PM
H202495-56-00
Laura Baldrati

PERMIT NO HCAI #H202495-56-00

NO	REVISION	DATE
△		

PUBLIC WORKS PROJECT MANAGER

CONSULTANT PROJECT MANAGER
Jay Lomagno

DRAWN BY	CHECKED BY
R&A	JJL
CONSULTANT JOB NO	DATE
A000495	06/15/2022

PROJECT TITLE AND ADDRESS

VENTURA COUNTY MEDICAL CENTER PEDIATRIC UNIT

300 HILLMONT AVE
VENTURA, CA 93003

COUNTY SPEC NUMBER
CP21-04

COUNTY PROJECT NUMBER
P6T20009

COUNTY DWG NO — SHEET 14 OF 89

SHEET TITLE
REF. CEILING PLAN
FAINER WING
SECOND FLOOR

SHEET NO
A5.1

P:\A000495 VCMC Pediatrics Wing\DRAWINGS\CONST DOCS\Fainer 2 Peds Plans.dwg Jun 17, 2022-8:45am

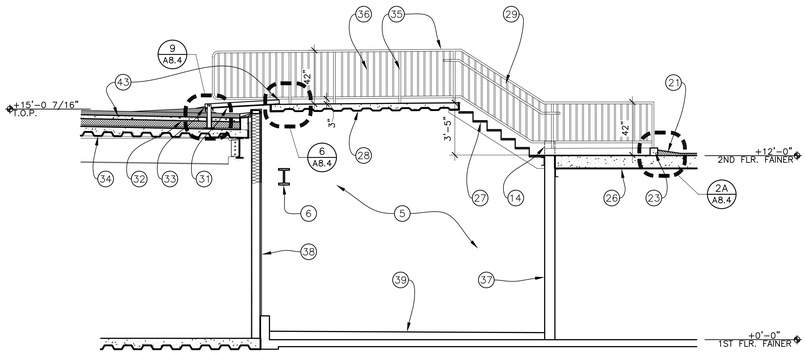

1 SECTION
SCALE 1/4" : 1'-0"

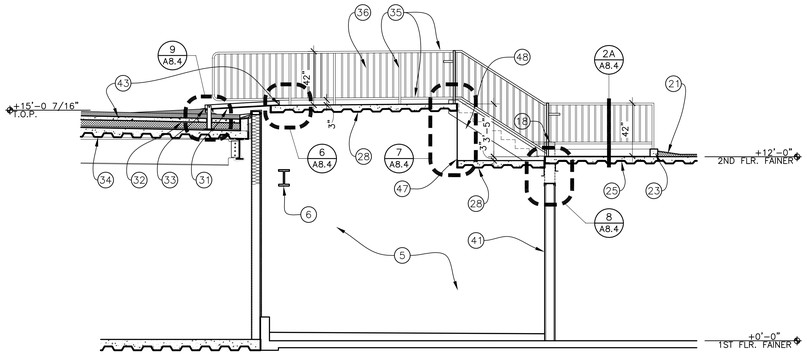

2 SECTION
SCALE 1/4" : 1'-0"

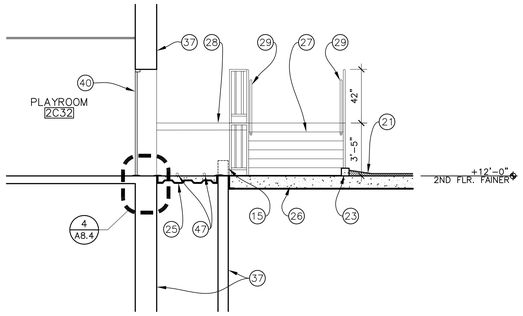

3 SECTION
SCALE 1/4" : 1'-0"

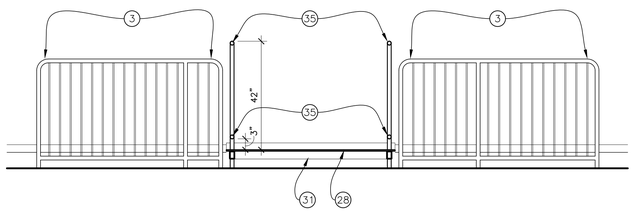

4 SECTION
SCALE 1/2" : 1'-0"

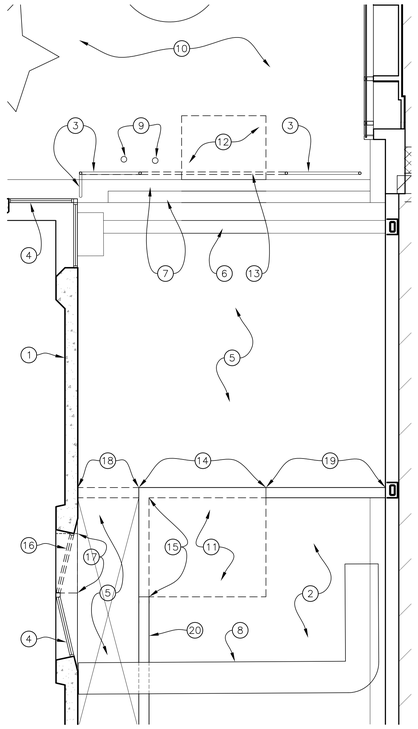

A PARTIAL DEMO PLAN
SCALE 1/4" : 1'-0"

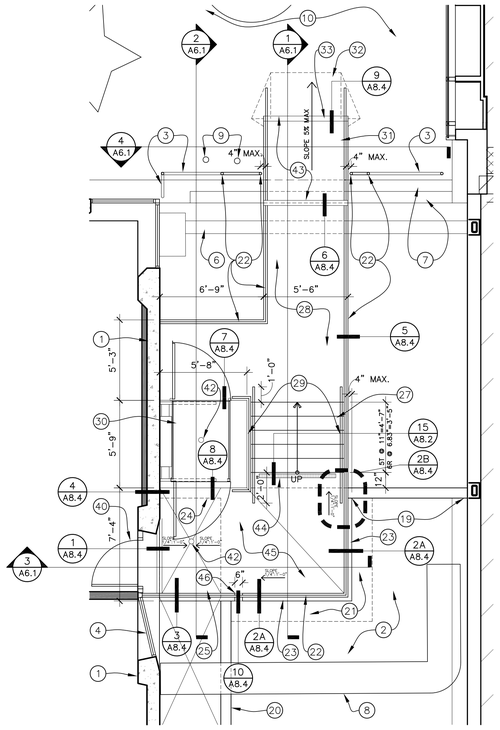

B PARTIAL FLOOR PLAN
SCALE 1/4" : 1'-0"

NOTE LEGEND

1 EXISTING CONCRETE WALL TO REMAIN.

2 EXISTING ROOFING TO REMAIN. PROTECT IN PLACE.

3 EXISTING 42" HIGH GUARD RAIL TO REMAIN.

4 EXISTING ALUMINUM STOREFRONT WINDOW TO REMAIN.

5 OPEN TO BELOW.

6 EXISTING BEAM BELOW TO REMAIN.

7 EXISTING PARAPET CAP AND FLASHING TO REMAIN.

8 EXISTING EXHAUST DUCT TO REMAIN.

9 EXISTING DECK DRAINS TO REMAIN.

10 EXISTING PLAY YARD DECK SURFACING TO REMAIN.

11 EXISTING ROOFING AND UNDERLAYMENT TO BE REMOVED IN THE APPROXIMATE LOCATION SHOWN.

12 EXISTING PLAY YARD DECK SURFACING TO BE REMOVED IN THE APPROXIMATE LOCATION SHOWN.

13 REMOVE EXISTING STEEL GUARDRAIL BETWEEN POSTS AS SHOWN.

14 SAWCUT AND REMOVE EXISTING CONCRETE PARAPET.

15 SAWCUT AND REMOVE EXISTING CONCRETE CURB.

16 REMOVE EXISTING STOREFRONT WINDOW.

17 SAWCUT AND REMOVE EXISTING CONCRETE WINDOW SILL TO THE FLOOR ELEVATION.

18 REMOVE EXISTING METAL FRAMED PARAPET WALL TO THE LEVEL SHOWN IN 2/A6.1. PROVIDE A NEW TOP TRACK AS REQUIRED AND REATTACHED EXTERIOR FINISH MATERIALS. PROVIDE A NEW SHEET METAL COPING.

19 EXISTING CONCRETE PARAPET TO REMAIN.

20 EXISTING 6" HIGH CONCRETE CURB TO REMAIN.

21 PATCH EXISTING ROOFING AND TAPERED INSULATION IN THE APPROXIMATE AREA AS SHOWN. ROOFING AND INSULATION TO MATCH EXISTING INSTALLATION AND SLOPE.

22 42" HIGH STEEL GUARDRAIL. SEE ELEVATION AND SECTION DRAWINGS FOR DETAILS.

23 6" HIGH CONCRETE CURB ON EXISTING CONCRETE SLAB. SEE STRUCTURAL DRAWINGS.

24 LINE OF EXISTING WALL BELOW.

25 WATERPROOF DECK COATING OVER CONCRETE OVER METAL DECK.

26 WATERPROOF DECK COATING OVER EXISTING CONCRETE DECK.

27 CONCRETE FILLED METAL PAN STAIRS. PROVIDE CAST IN ALUMINUM STAIR NOSINGS AT EACH RISER. ALL NOSINGS SHALL BE PROVIDED WITH A CONTRASTING STRIPE OF COLOR 2" WIDE MINIMUM 1" BACK MAXIMUM FROM THE EDGE OF THE STAIR NOSING. SEE STRUCTURAL DRAWINGS.

28 LIGHTWEIGHT CONCRETE OVER METAL DECK. SEE STRUCTURAL DRAWINGS.

29 1 1/4" DIAMETER PAINTED STEEL HANDRAIL MOUNTED AT 34" MINIMUM ABOVE THE ADJACENT STAIR NOSING. HANDRAILS TO EXTEND PAST THE UPPER TREAD A MINIMUM OF 12" AND BELOW THE LOWER TREAD A MINIMUM OF 23".

30 ACCESSIBLE WHEELCHAIR LIFT. GARAVANTA LIFT SERIES 3 GENESIS OPAL, SIZE LARGE. LIFT SHALL COMPLY WITH ASME 18.1–2003, OR CALIFORNIA TITLE 8.

31 STEEL BRIDGE. SEE STRUCTURAL DRAWINGS.

32 REPOUR CONCRETE TOPPING TO THE CONTOUR SHOWN AND RE–COAT WITH PLAYGROUND SURFACING TO MATCH EXISTING. EXISTING PLAYGROUND TOPPING IS SPECTRAPOUR AS MANUFACTURED BY SPECTRATURF GLOBAL SURFACING SYSTEMS.

33 ALUMINUM THRESHOLD.

34 EXISTING STRUCTURAL SUBSTRATE AND ROOF ASSEMBLY TO REMAIN.

35 2" O/D STEEL PIPE TO MATCH EXISTING WITH A PAINT FINISH.

36 1/2" X 1/2" BAR PICKETS AT 4" O.C.

37 EXISTING CONCRETE WALL TO REMAIN.

38 EXISTING METAL FRAMED WALL WITH A PLASTER FINISH TO REMAIN.

39 EXISTING ROOF SURFACE BELOW.

40 STOREFRONT DOOR. SEE FLOOR PLANS.

41 EXISTING METAL FRAMED WALL WITH METAL WALL PANELS.

42 DECK DRAIN. SEE PLUMBING DRAWINGS.

43 SLOPE OF BRIDGE AND DECK TOPPING NOT TO EXCEED 5% IN THE DIRECTION OF TRAVEL. EXACT LENGTH OF BRIDGE AND TOPPING TO BE CONFIRMED IN THE FIELD BY THE CONTRACTOR PRIOR TO PREPARING SHOP DRAWINGS FOR THE WORK.

44 THRESHOLD DRAIN, SEE PLUMBING DRAWINGS.

45 BUILD UP DECK COATING AS REQUIRED TO ACHIEVE SLOPE SHOWN.

46 6" WIDE OPENING IN "CURB" TO ALLOW FOR OVERFLOW DRAINAGE FROM WALKWAY ON TO EXISTING ROOF.

47 TWO 3" DIAMETER HOLES THROUGH SHEET METAL FOR OVERFLOW DRAINAGE. LOCATE BOTTOM OF HOLE 2" ABOVE DECK.

48 SHEET METAL ENCLOSURE SIMILAR TO 7/A8.4 BELOW STAIR STRINGER (BEYOND).

VENTURA COUNTY
HEALTH CARE AGENCY

PUBLIC
VENTURA COUNTY
WORKS

ENGINEERING SERVICES

RASMUSSEN & ASSOCIATES
Architecture
Planning
Interiors
21 S. California Street
Fourth Floor
Ventura, California 93001
(805) 648-1234

PROFESSIONAL SEALS

LICENSED ARCHITECT JAY LOMAGNO C 20507 12-31-2022 STATE OF CALIFORNIA

PERMIT APPROVAL STAMP

REVIEWED IN ACCORDANCE WITH THE REQUIREMENTS OF T24, CCR
APPROVED
Department of Health Care Access and Information
FACILITIES DEVELOPMENT DIVISION
9/28/2022, 3:17:57 PM
H202495-56-00
Laura Baldrati

PERMIT NO HCAI #H202495-56-00

NO	REVISION	DATE
1	HCAI RESUBMITTAL	09/19/2022

PUBLIC WORKS PROJECT MANAGER

CONSULTANT PROJECT MANAGER
Jay Lomagno

DRAWN BY	CHECKED BY
R&A	JJL
CONSULTANT JOB NO	DATE
A000495	06/15/2022

PROJECT TITLE AND ADDRESS

VENTURA COUNTY MEDICAL CENTER PEDIATRIC UNIT

300 HILLMONT AVE
VENTURA, CA 93003

COUNTY SPEC NUMBER
CP21-04

COUNTY PROJECT NUMBER
P6T20009

COUNTY DWG NO — SHEET 15 OF 89

SHEET TITLE
PLAYGROUND BRIDGE PLANS & SECTIONS

SHEET NO
A6.1

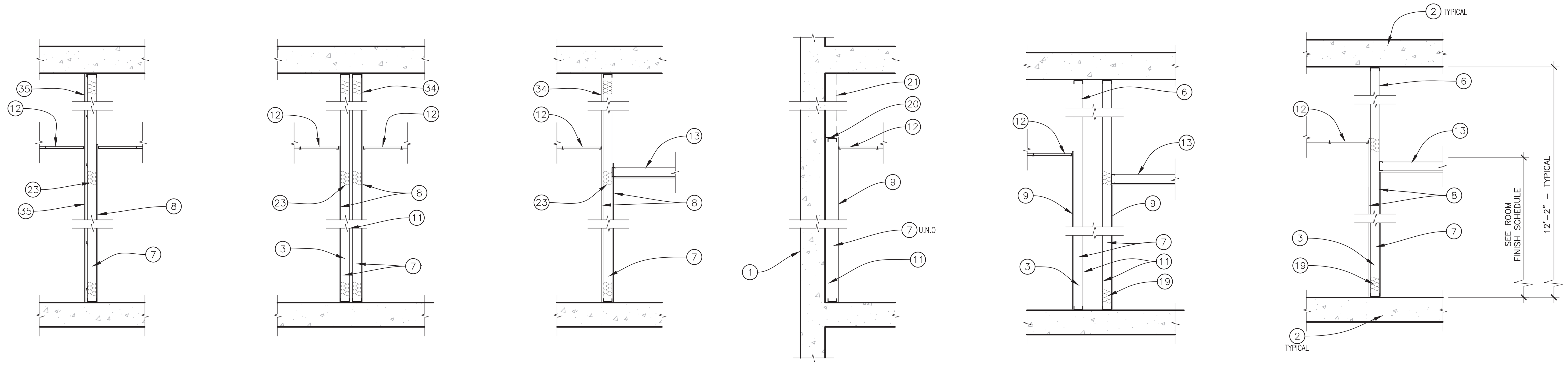

ACOUSTIC-SEALED PENETRATIONS
A6

ACOUSTIC-SEALED PENETRATIONS STC 50 ASSEMBLY
A5

ACOUSTIC-SEALED PENETRATIONS STC 45 ASSEMBLY
A4

NON-RATED PENETRATIONS STC RATING NOT REQUIRED
A3

NON-RATED PENETRATIONS STC RATING NOT REQUIRED
A2

NON-RATED PENETRATIONS STC RATING NOT REQUIRED
A1

WALL SECTIONS: TYPE "A" NON-RATED

SCALE 1/2" : 1'-0"

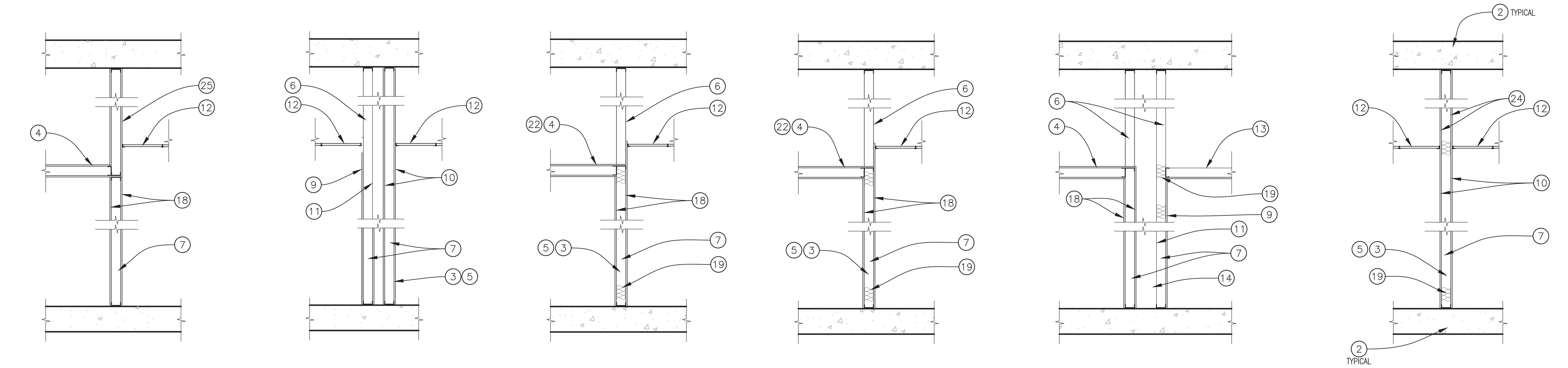

20-MINUTE RATED DOORS FIRE-STOPPED PENETRATIONS STC RATING NOT REQUIRED
B6
1-HOUR RATING PER GA WP 1350

(NO DOORS IN THIS WALL TYPE) FIRE-STOPPED PENETRATIONS STC RATING NOT REQUIRED
B5
1-HOUR RATING PER GA WP 1350

20-MINUTE RATED DOORS FIRE-STOPPED PENETRATIONS STC 35 ASSEMBLY
B4
1-HOUR RATING PER GA WP 1350

20-MINUTE RATED DOORS FIRE-STOPPED PENETRATIONS STC RATING NOT REQUIRED
B3
1-HOUR RATING PER GA WP 1350

(NO DOORS IN THIS WALL TYPE) FIRE-STOPPED PENETRATIONS STC RATING NOT REQUIRED
B2
1-HOUR RATING PER GA WP 1350

20-MINUTE RATED DOORS FIRE-STOPPED PENETRATIONS STC RATING NOT REQUIRED
B1
1-HOUR RATING PER GA WP 1350

WALL TYPE "B": ONE-HOUR RATED FIRE PARTITION

SCALE 1/2" : 1'-0"

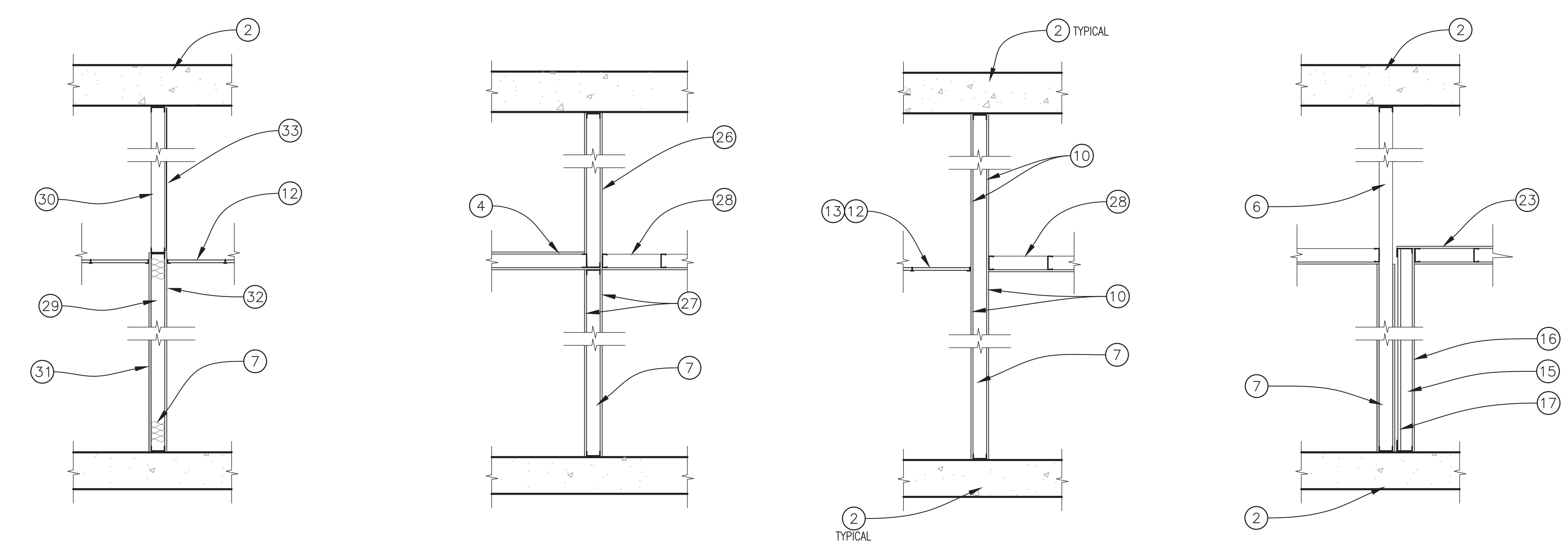

ACOUSTIC SEALED PENETRATIONS IMPROVED STC RATING: APPROX. 45
E1

45-MINUTE RATED DOORS FIRE-STOPPED PENETRATIONS STC RATING NOT REQUIRED
D2
1-HOUR RATING PER GA WP 1350

45-MINUTE RATED DOORS FIRE-STOPPED PENETRATIONS STC RATING NOT REQUIRED
D1
1-HOUR RATING PER GA WP 1350

(NO DOORS AT THIS ASSEMBLY) FIRE-STOPPED PENETRATIONS STC RATING NOT REQUIRED
C1
1-HOUR RATING PER PROGRESSIVE ENGINEERING REPORT AER-09038

WALL TYPE "E": EXISTING NON-RATED PARTITION

SCALE 1/2" : 1'-0"

WALL TYPE "D": ONE-HOUR FIRE BARRIER

SCALE 1/2" : 1'-0"

WALL TYPE "C": ONE-HOUR FIRE PARTITION

SCALE 1/2" : 1'-0"

NOTE LEGEND

1. AT EXISTING COLUMNS AND EXTERIOR WALLS, 4,000 PSI NORMAL WEIGHT CONCRETE. EXTERIOR WALLS ARE 10" THICK TYPICAL. AT WALL TYPE A3 (SIM), WALL CONDITION IS EXISTING METAL STUDS WITH FINISH.
2. EXISTING 10" THICK STRUCTURAL LIGHTWEIGHT CONCRETE FLOOR SLAB (4,000 PSI, 115 P.C.F.). TYPICAL AT FLOOR ABOVE AND BELOW.
3. AT EXISTING WALL CONDITIONS (WHERE OCCUR), 4" STEEL STUDS AT 16" O.C., 16 GA. AND 20 GA. TYPICAL EXCEPT 6" STUDS WHERE OCCURS AT PLUMBING RISERS.
4. EXISTING ONE-HOUR RATED CEILING ASSEMBLY: STEEL STUDS WITH ONE LAYER 5/8" TYPE X GYPSUM BOARD TOP AND BOTTOM.
5. AT EXISTING WALL CONDITIONS (WHERE OCCUR), ONE-HOUR RATED WALL ASSEMBLY: STEEL STUDS WITH ONE LAYER 5/8" TYPE X GYPSUM BOARD EACH SIDE.
6. EXPOSED STEEL STUDS ABOVE CEILING.
7. 4" STEEL STUDS AT 16" O.C. – SEE FRAMING DETAILS AT SHEET S1.30.
8. 5/8" GYPSUM BOARD FROM FLOOR TO CEILING AT BOTH SIDES OF WALL FOR NON-RATED FINISH.
9. 5/8" GYPSUM BOARD FROM FLOOR TO CEILING AT ONE SIDE OF WALL FOR NON-RATED FINISH.
10. 5/8" GYPSUM BOARD FROM FLOOR TO SLAB ABOVE AT BOTH SIDES OF WALL FOR ONE-HOUR RATED WALL ASSEMBLY. SEE DETAILS 7 AND 8 ON SHEET A8.2 FOR FIRE RATED TREATMENT AT BOTTOM OF WALL AND TOP OF FULL-HEIGHT WALLS.
11. STUD BRIDGING PER FRAMING DETAILS, SHEET S1.30 WHERE UNFINISHED FLANGES OF STUDS EXCEED 48" IN HEIGHT.
12. NON-RATED ACOUSTIC TILE CEILING WHERE OCCURS; SEE CEILING PLAN.
13. NON-RATED GYPSUM BOARD CEILING WHERE OCCURS; SEE CEILING PLAN.
14. WHERE TOILET CARRIER EXTENDS INTO RATED WALL, PROVIDE 4-SIDED GYPSUM BOARD AT RATED RECESS IN WALL PER DETAIL 12/A8.2 .
15. 4" STEEL SHAFTWALL STUDS: USG 400CH-34 AT 24" O.C., PER PROGRESSIVE ENGINEERING REPORT AER-09038. FASTEN BOTTOM TRACK TO FLOOR PER DETAIL 14/S1.30.
16. ONE LAYER, 5/8" USG FIRECODE X GYPSUM BOARD, FACING ROOM 4C24.
17. ONE LAYER, 1" USG GYPSUM LINER PANELS.
18. 5/8" GYPSUM BOARD FROM FLOOR TO RATED CEILING ABOVE AT BOTH SIDES OF WALL FOR ONE-HOUR RATED WALL ASSEMBLY.
19. 3-1/2" ACOUSTIC BATT INSULATION IN WALL CAVITY, EXTENDING FROM FLOOR TO HIGHEST ADJACENT CEILING. TYPICAL AT ALL NEW WALLS EXCEPT INSULATION NOT REQUIRED AT ROOMS 2C35, 2C37, 2C45, 2C46, 2C47, 2C48, 2C51.
20. 16 GA. x 6" LONG ANGLE AT 32" O.C. WITH KB-TZ2 ANCHORS TO CONCRETE PER DETAIL 13/S1.30 AND #12 SCREWS TO TOP TRACK.
21. WHERE EXISTING WALL BEHIND IS NOT CONCRETE, EXTEND WALL STUDS TO STRUCTURE ABOVE: 2-1/2" x 20 GA. STUDS AT 16" O.C.
22. WHERE SHOWN ON CEILING PLAN, EXTEND EXISTING ONE HOUR CEILING ASSEMBLY PER NOTE 4 ABOVE INTO NEW ALCOVE OFF OF CORRIDOR.
23. 3-1/2" ACOUSTIC BATT INSULATION IN WALL CAVITY PER NOTE 19 ABOVE, EXCEPT EXTEND INSULATION FULL-HEIGHT TO UNDERSIDE OF FLOOR ABOVE.
24. WHERE NOTED ON FLOOR PLANS, PROVIDE 5/8" GYPSUM BOARD FINISH AT EXISTING EXPOSED STUDS ABOVE CEILING TO PROVIDE CONTINUOUS FIRE-RATED FINISH TO STRUCTURE ABOVE.
25. EXISTING SOFFIT SUSPENDED FROM STRUCTURE ABOVE. SOFFIT WAS ORIGINALLY CONSTRUCTED AS A RATED WALL ASSEMBLY PER NOTE 5 ABOVE. SOFFIT NO LONGER REQUIRED FOR CORRIDOR ENCLOSURE AT THIS CONDITION: UNPROTECTED OPENINGS AND PENETRATIONS ALLOWED.
26. EXISTING SOFFIT SUSPENDED FROM STRUCTURE ABOVE. SOFFIT WAS ORIGINALLY CONSTRUCTED AS A RATED WALL ASSEMBLY PER NOTE 5 ABOVE. SOFFIT PROVIDES UPPER SECTION OF FIRE BARRIER WALL, WITH PROTECTED OPENINGS AND PENETRATIONS REQUIRED.
27. 5/8" GYPSUM BOARD AT BOTH SIDES OF WALL FOR ONE-HOUR RATED WALL ASSEMBLY, FROM FLOOR TO EXISTING RATED WALL AT SOFFIT ABOVE.
28. NON-RATED GYPSUM BOARD CEILING AT SOILED UTILITY ROOM. CEILING FRAMING SHALL NOT INTERRUPT THE FULL-HEIGHT GYPSUM BOARD WALL FINISH.
29. EXISTING 4"x20 GA STUDS TO TOP TRACK AT CEILING; SEE DETAIL 5/A8.3.
30. THREE EXISTING 4"x16 GA STUDS FULL HEIGHT AT MIDDLE OF WALL.
31. EXISTING GYPSUM BOARD AT ONE SIDE OF WALL TO REMAIN; PATCH AS REQ'D.
32. REMOVE EXISTING GYPSUM BOARD AT ONE SIDE OF WALL AND REPLACE WITH 5/8' ACOUSTIC GYPSUM BOARD: PABCO "QUIETROCK ES" OR CERTAINTEED "SILENTFX QUICKCUT".
33. EXISTING 1 PSF LEAD SHEET ATTACHED TO TOP TRACK AT UNDERSIDE OF DECK ABOVE. FASTEN TO NEW TRACK AT CEILING. PROVIDE NEW 1 PSF LEAD SHEET TO REPAIR ANY EXISTING DAMAGE OR OPENINGS, LAPPING SEAMS MINIMUM OF 2" AND SECURING WITH MECHANICAL FASTENERS. VERIFY EXTENT OF DAMAGED AND MISSING LEAD SHEET IN FIELD.
34. EXTEND 5/8" GYPSUM BOARD FINISH FULL HEIGHT TO STRUCTURE ABOVE AT ONE SIDE OF WALL.
35. 5/8" ACOUSTIC GYPSUM BOARD ON RESILIENT FURRING CHANNELS AT 24" O.C.

GENERAL NOTES

A. GYPSUM BOARD SHALL BE 5/8" TYPE "X" THROUGHOUT, UNLESS NOTED OTHERWISE.
B. ONE HOUR WALL ASSEMBLIES AND CORRIDOR CEILING ASSEMBLY WITH METAL STUDS AND 5/8" TYPE X GYPSUM BOARD BOTH SIDES PER G.A. FILE WP 1350.
C. SEE DETAIL 9/A8.2 FOR RECESSED CABINETS OR FIXTURES IN FIRE RATED PARTITIONS.
D. AT ALL RATED WALLS (TYPES B, C, AND D), WHERE RATED WALL ASSEMBLY EXTENDS TO SLAB ABOVE, PROVIDE MARKING PER CBC 703.7. LOCATE SIGNAGE AT 30' INTERVALS, MAX. 15' FROM ENDS OF WALLS, READING," FIRE AND/OR SMOKE BARRIER – PROTECT ALL OPENINGS". TEXT SHALL BE MIN. 3" HIGH WITH 3/8" STROKE.
E. AT ALL WALLS WITH A SOUND RATING NOTED, PROVIDE NON-HARDENING ACOUSTIC SEALANT AT THE SILL AND AROUND ANY PENETRATIONS. ALL RECESSED BOXES SHALL BE WRAPPED WTIH ACOUSTIC PUTTY PADS.

VENTURA COUNTY HEALTH CARE AGENCY

PUBLIC WORKS
VENTURA COUNTY
ENGINEERING SERVICES

RASMUSSEN & ASSOCIATES
Architecture
Planning
Interiors
21 S. California Street
Fourth Floor
Ventura, California 93001
(805) 648-1234

PROFESSIONAL SEALS

PERMIT APPROVAL STAMP

REVIEWED IN ACCORDANCE WITH THE REQUIREMENTS OF T24, CCR
APPROVED
Department of Health Care Access and Information
FACILITIES DEVELOPMENT DIVISION
9/26/2022, 3:17:57 PM
H202495-56-00
Laura Baldrati

PERMIT NO HCAI #H202495-56-00

NO	REVISION	DATE
△		

PUBLIC WORKS PROJECT MANAGER
CONSULTANT PROJECT MANAGER
Jay Lomagno
DRAWN BY R&A
CHECKED BY JJL
CONSULTANT JOB NO A000495
DATE 06/15/2022
PROJECT TITLE AND ADDRESS

VENTURA COUNTY MEDICAL CENTER PEDIATRIC UNIT

300 HILLMONT AVE
VENTURA, CA 93003

COUNTY SPEC NUMBER CP21-04
COUNTY PROJECT NUMBER P6T20009
COUNTY DWG NO
SHEET 16 OF 89
SHEET TITLE
WALL SECTIONS
SHEET NO
A6.2

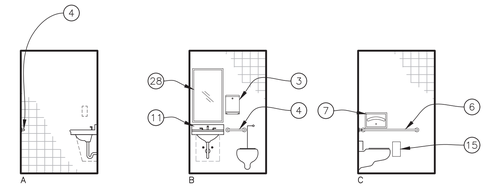

3 TOILET 2C06
SCALE 1/4" : 1'-0"

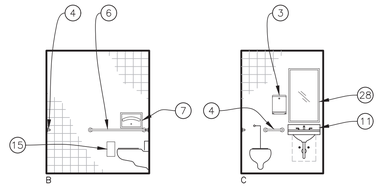

2 TOILET 2C04
SCALE 1/4" : 1'-0"

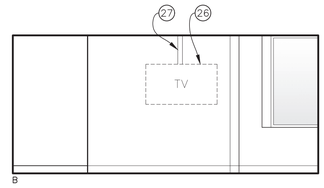

1 CONFERENCE ROOM 2C02
SCALE 1/4" : 1'-0"

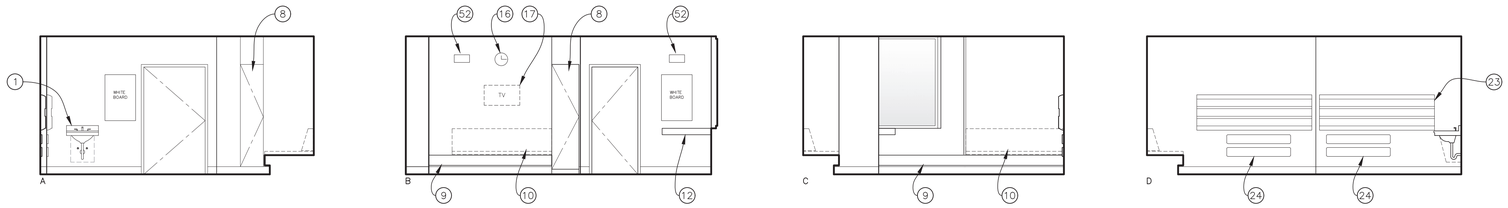

4 PEDS 2C03
SCALE 1/4" : 1'-0"

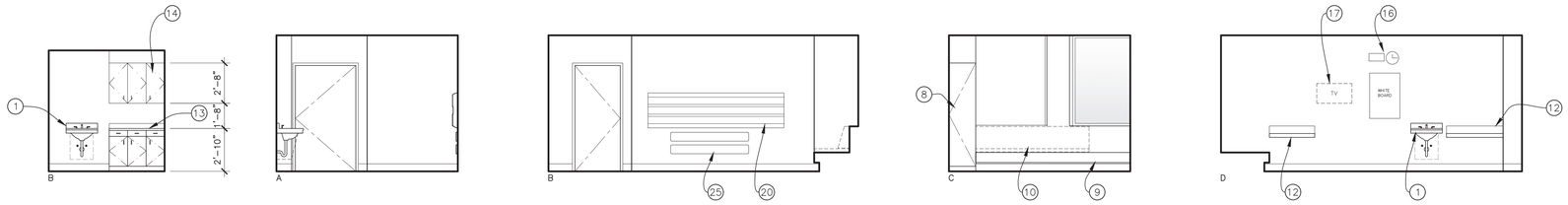

6 ANTE 2C12
SCALE 1/4" : 1'-0"

5 PEDS 2C05 (TYPICAL PEDS ROOM)
SCALE 1/4" : 1'-0"

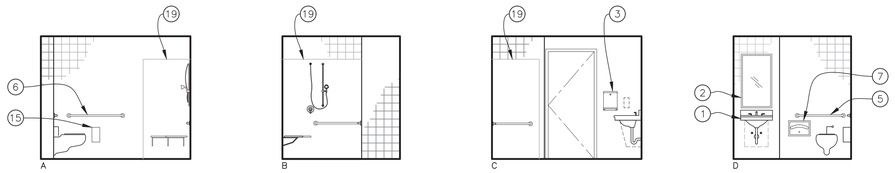

8 TOILET 2C14 (ACCESSIBLE)
SCALE 1/4" : 1'-0"

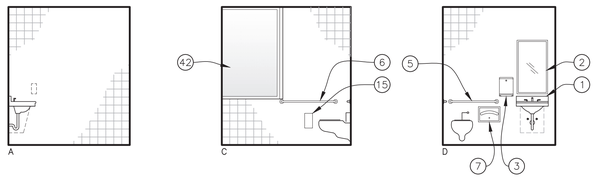

7 TOILET 2C10 (ACCESSIBLE)
SCALE 1/4" : 1'-0"

GENERAL NOTES

A. SEE DETAIL 14/A9.2 ANCHORAGE OF BASE CABINETS.

B. SEE DETAIL 6/A9.2 FOR ANCHORAGE OF WALL–HUNG CABINETS AND FILLER PANEL TO CEILING.

C. CONTRACTOR SHALL PROVIDE BACKING AND INSTALLATION FOR THE FOLLOWING ACCESSORIES IN EACH PATIENT ROOM AND TOILET ROOM; LOCATIONS AT EACH ROOM TO BE CONFIRMED WITH ENGINEER:
PATIENT ROOM: GLOVE BOX RACK (OFCI), PATIENT WHITEBOARD (OFCI), TOWEL DISPENSER (CFCI).
TOILET ROOM: TOWEL DISPENSER (CFCI), TOILET PAPER DISPENSER (CFCI), SEAT COVER DISPENSER (CFCI), COAT HOOK (CFCI), GRAB BARS (CFCI).

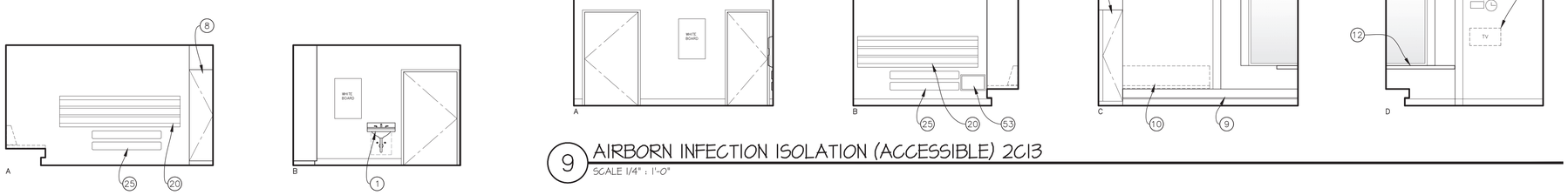

9 AIRBORN INFECTION ISOLATION (ACCESSIBLE) 2C13
SCALE 1/4" : 1'-0"

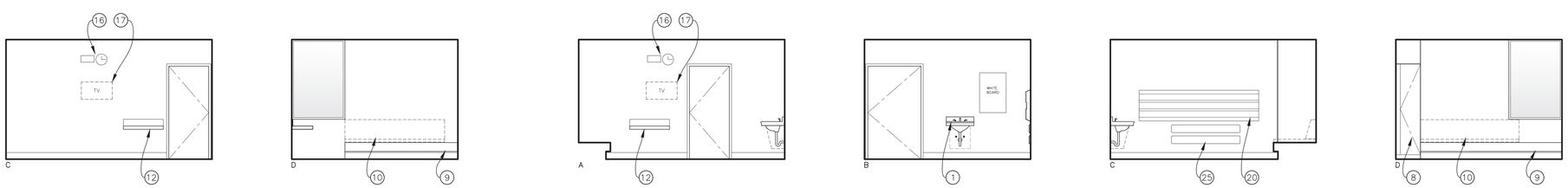

11 PEDS 2C17
SCALE 1/4" : 1'-0"

10 PEDS 2C15
SCALE 1/4" : 1'-0"

NOTE LEGEND

1. HANDWASH LAVATORY; SEE PLUMBING DRAWINGS AND DETAIL 12/A9.1.
2. MIRROR LIGHT FIXTURE, BOTTOM OF VISIBLE SURFACE AT +39" MAX.
3. PAPER TOWEL DISPENSER, BOTTOM AT +40" MAX.
4. 12" LONG GRAB BAR; SEE DETAIL 4/A9.1.
5. 36" LONG GRAB BAR; SEE DETAIL 4/A9.1.
6. 42" LONG GRAB BAR; SEE DETAIL 4/A9.1.
7. SEAT COVER DISPENSER; SEE DETAIL 5/A9.1.
8. PATIENT WARDROBE CABINET; SEE DETAIL 8/A9.2.
9. END TABLE AT DAYBED; SEE DETAIL 9/A9.2.
10. DAYBED; SEE DETAIL 10/A9.2.
11. HANDWASH FIXTURE AT NON–ACCESSIBLE TOILET ROOM, RIM AT +30", WITH TRAP COVER BELOW.
12. 12" DEEP SOLID SURFACE COUNTERTOP AND BACKSPLASH; SEE DETAIL5/A9.2.
13. SOLID SURFACE COUNTERTOP WITH PLASTIC LAMINATE BASE CABINET BELOW; SEE DETAIL 14/A9.2.
14. PLASTIC LAMINATE WALL–HUNG CABINET; SEE DETAIL 6/A9.2.
15. TOILET PAPER DISPENSER; SEE DETAIL 2/A9.1.
16. WALL MOUNTED DIGITAL CLOCK AND ANALOG CLOCK (WHERE SHOWN) CONNECTED TO CLOCK SYSTEMS.
17. WALL–MOUNTED FLAT–PANEL TV, WEIGHT LESS THAN 20#. PROVIDE BACKING PER STRUCTURAL DRAWINGS. TOP OF MOUNT AT +74".
18. ACCESSIBLE CERAMIC TILE SHOWER STALL; SEE DETAIL 8/A9.1.
19. PREFABRICATED FIBERGLASS SHOWER STALL CONFORMING TO DETAIL 8/A9.1.
20. TYPICAL PATIENT ROOM HEADWALL; SEE ELEVATION A/A7.4.
21. ISOLATION ROOM HEADWALL; SEE ELEVATION B/A7.4.
22. ISOLATION ROOM HEADWALL; REVERSE LAYOUT OF ELEVATION B/A7.4.
23. ROOM–SPECIFIC HEADWALL; SEE ELEVATIONS ON SHEET A7.4.
24. 48" LONG BUMPER RAILS, CENTERED AT +17" AND +27" A.F.F.
25. 60" LONG BUMPER RAILS, CENTERED AT +17" AND +27" A.F.F.
26. FLAT–PANEL TV WITH MOUNT TO CONCRETE WALL; ANCHOR WALL MOUNT TO CONCRETE WALL WITH 3/8" HILTI KB–TZ2 ANCHORS, 2" EMBEDMENT. SEE POST–INSTALLED ANCHOR NOTES, SHEET S1.00.
27. SURFACE RACEWAY ON CONCRETE WALL FOR TV CONNECTION.
28. MIRROR LIGHT FIXTURE, BOTTOM AT +36".

29–41 (NOT USED)

42. EXISTING EXTERIOR WINDOW WITH TRANSLUCENT WINDOW FILM APPLIED TO INTERIOR FACE OF GLASS.

43–51 (NOT USED)

52. DIGITAL CLOCK CONNECTED TO CLOCK SYSTEM AT OPPOSITE HEADWALL.
53. LOW WALL EXHAUST REGISTER – SEE MECHANICAL.

VENTURA COUNTY HEALTH CARE AGENCY

PUBLIC VENTURA COUNTY WORKS

ENGINEERING SERVICES

RASMUSSEN & ASSOCIATES
Architecture
Planning
Interiors
21 S. California Street
Fourth Floor
Ventura, California 93001
(805) 648-1234

PROFESSIONAL SEALS

PERMIT APPROVAL STAMP

REVIEWED IN ACCORDANCE WITH THE REQUIREMENTS OF T24, CCR
APPROVED
Department of Health Care Access and Information
FACILITIES DEVELOPMENT DIVISION
9/28/2022, 3:17:57 PM
H202495-56-00
Laura Baldrati

PERMIT NO HCAI #H202495-56-00

NO	REVISION	DATE
△		

PUBLIC WORKS PROJECT MANAGER

CONSULTANT PROJECT MANAGER
Jay Lomagno

DRAWN BY	CHECKED BY
R&A	JJL
CONSULTANT JOB NO A000495	DATE 06/15/2022

PROJECT TITLE AND ADDRESS

VENTURA COUNTY MEDICAL CENTER PEDIATRIC UNIT

300 HILLMONT AVE
VENTURA, CA 93003

COUNTY SPEC NUMBER CP21-04

COUNTY PROJECT NUMBER P6T20009

COUNTY DWG NO — SHEET 17 OF 89

SHEET TITLE

INTERIOR ELEVATIONS

SHEET NO A7.1

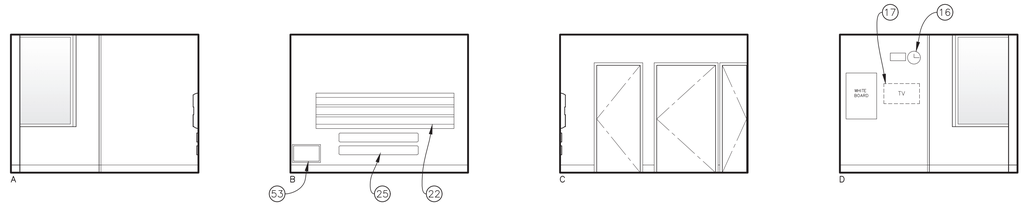

13 AIRBORN INFECTION ISOLATION 2C20
SCALE 1/4" : 1'-0"

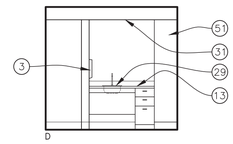

12 ANTE 2C19
SCALE 1/4" : 1'-0"

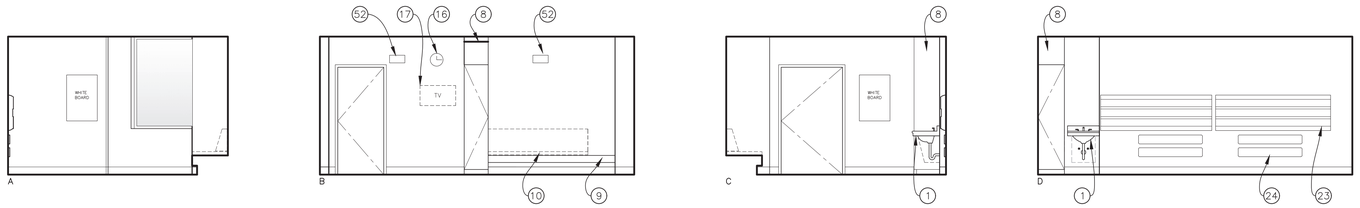

14 PEDS 2C30
SCALE 1/4" : 1'-0"

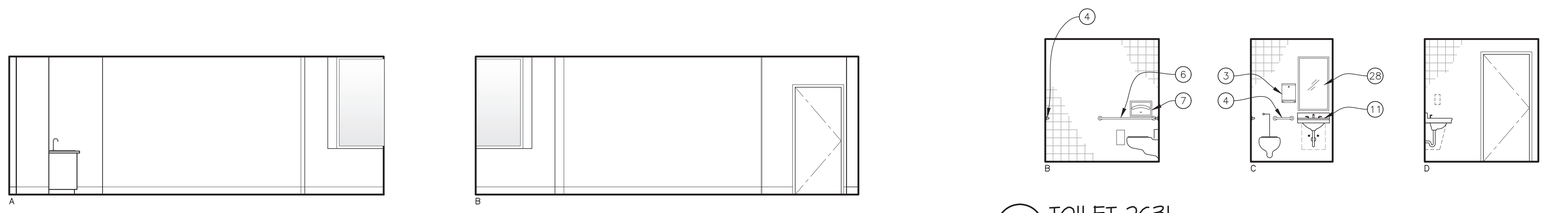

15 TOILET 2C31
SCALE 1/4" : 1'-0"

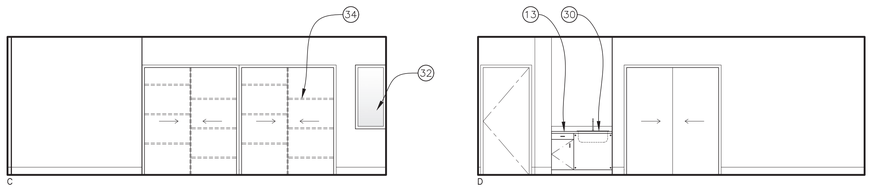

17 PLAYROOM 2C32
SCALE 1/4" : 1'-0"

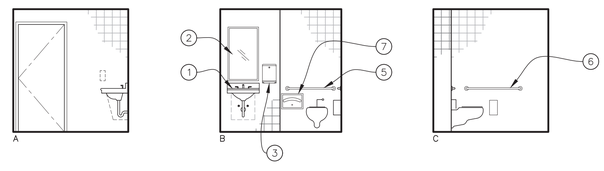

16 TOILET 2C34 (ACCESSIBLE)
SCALE 1/4" : 1'-0"

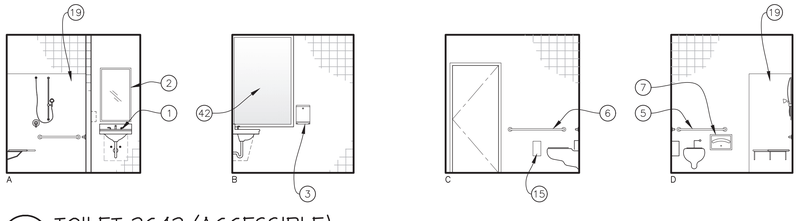

19 TOILET 2C42 (ACCESSIBLE)
SCALE 1/4" : 1'-0"

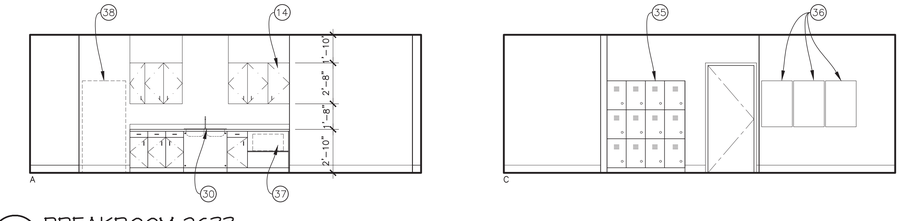

18 BREAKROOM 2C33
SCALE 1/4" : 1'-0"

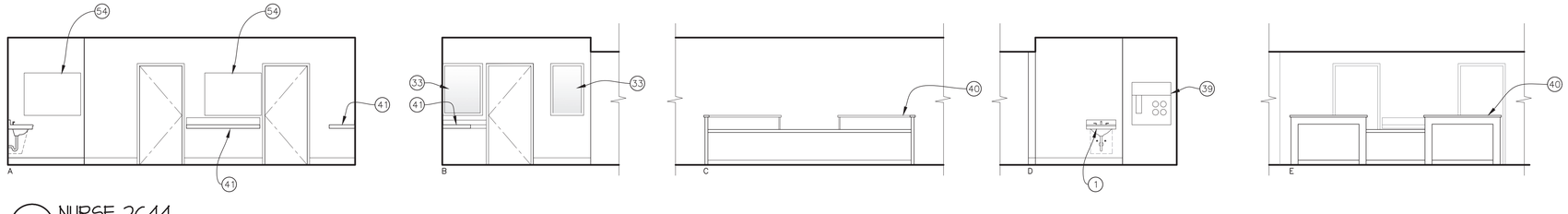

20 NURSE 2C44
SCALE 1/4" : 1'-0"

NOTE LEGEND

1. HANDWASH LAVATORY; SEE PLUMBING DRAWINGS AND DETAIL 12/A9.1.
2. MIRROR LIGHT FIXTURE, BOTTOM OF VISIBLE SURFACE AT +39" MAX.
3. PAPER TOWEL DISPENSER, BOTTOM AT +40" MAX.
4. 12" LONG GRAB BAR; SEE DETAIL 4/A9.1
5. 36" LONG GRAB BAR; SEE DETAIL 4/A9.1.
6. 42" LONG GRAB BAR; SEE DETAIL 4/A9.1.
7. SEAT COVER DISPENSER; SEE DETAIL 5/A9.1.
8. PATIENT WARDROBE CABINET; SEE DETAIL 8/A9.2.
9. END TABLE AT DAYBED; SEE DETAIL 9/A9.2.
10. DAYBED; SEE DETAIL 10/A9.2.
11. HANDWASH FIXTURE AT NON-ACCESSIBLE TOILET ROOM, RIM AT +30", WITH TRAP COVER BELOW.
12. (NOT USED)
13. SOLID SURFACE COUNTERTOP AND SPLASH WITH PLASTIC LAMINATE BASE CABINET BELOW; SEE DETAIL 14/A9.2 . TOP OF COUNTER AT +34".
14. PLASTIC LAMINATE WALL-HUNG CABINET; SEE DETAIL 6/A9.2.
15. TOILET PAPER DISPENSER; SEE DETAIL 2/A9.1.
16. WALL MOUNTED DIGITAL CLOCK AND ANALOG CLOCK (WHERE SHOWN) CONNECTED TO CLOCK SYSTEMS.
17. WALL-MOUNTED FLAT-PANEL TV, WEIGHT LESS THAN 20#. PROVIDE BACKING PER STRUCTURAL DRAWINGS. TOP OF MOUNT AT +74".
18. (NOT USED)
19. PREFABRICATED FIBERGLASS SHOWER STALL CONFORMING TO DETAIL 8/A9.1.
20. TYPICAL PATIENT ROOM HEADWALL; SEE ELEVATION A/A7.4.
21. (NOT USED)
22. ISOLATION ROOM HEADWALL; REVERSE LAYOUT OF ELEVATION B/A7.4.
23. ROOM-SPECIFIC HEADWALL; SEE ELEVATIONS ON SHEET A7.4.
24. 48" LONG BUMPER RAILS, CENTERED AT +17" AND +27" A.F.F.
25. 60" LONG BUMPER RAILS, CENTERED AT +17" AND +27" A.F.F.

26-27 (NOT USED)

28. MIRROR LIGHT FIXTURE, BOTTOM AT +36".
29. HANDWASH SINK IN SOLID SURFACE COUNTERTOP WITH ACCESSIBLE KNEE SPACE BELOW; SEE PLUMBING DRAWINGS AND DETAIL 10/A9.1.
30. SINK IN SOLID SURFACE COUNTERTOP; SEE PLUMBING DRAWINGS AND DETAIL 11/A9.1. PARALLEL APPROACH PROVIDED FOR ACCESSIBILITY TO SINK; KNEE AND TOE SPACE BELOW NOT REQUIRED. FACE OF CABINET BELOW SHALL BE A FIXED REMOVABLE PANEL.
31. EXISTING SOFFIT ABOVE.
32. TEMPERED GLASS IN HOLLOW METAL FRAME. SEE DETAIL 5/A8.2.
33. 1-HOUR RATED STOREFRONT SYSTEM; SEE DETAIL 4/A8.2.
34. 1" THICK MDF ADJUSTABLE SHELVES WITH PLASTIC LAMINATE FINISH.
35. PREFABRICATED LOCKERS.
36. 24"x36" WALL-MOUNTED BULLETIN BOARD, 15 LB. WEIGHT.
37. OPEN SHELF FOR MICROWAVE.
38. REFRIGERATOR; SEE SHEET A2.5.
39. PNEUMATIC TUBE STATION; SEE DETAIL 4/A8.1.
40. NURSE STATION; SEE DETAILS 1-4 AND 7 ON SHEET A9.2
41. SOLID SURFACE COUNTERTOP AND SPLASH CANTILEVERING FROM WALL; SEE DETAIL 5/A9.2.
42. EXISTING EXTERIOR WINDOW WITH TRANSLUCENT WINDOW FILM APPLIED TO INTERIOR FACE OF GLASS.

43-50 (NOT USED)

51. SIDE OF PLAS. LAM. PATIENT WARDROBE THAT OPENS INTO ROOM 2C20.
52. DIGITAL CLOCK CONNECTED TO CLOCK SYSTEM AT OPPOSITE HEADWALL.
53. LOW WALL EXHAUST REGISTER – SEE MECHANICAL.
54. 48"W. x 36"H. MAGNETIC WHITEBOARD WITH MARKER TRAY.

GENERAL NOTES

A. SEE DETAIL 14/A9.2 ANCHORAGE OF BASE CABINETS.

B. SEE DETAIL 6/A9.2 FOR ANCHORAGE OF WALL-HUNG CABINETS AND FILLER PANEL TO CEILING.

C. CONTRACTOR SHALL PROVIDE BACKING AND INSTALLATION FOR THE FOLLOWING ACCESSORIES IN EACH PATIENT ROOM AND TOILET ROOM; LOCATIONS AT EACH ROOM TO BE CONFIRMED WITH ENGINEER:
PATIENT ROOM: GLOVE BOX RACK (CFCI), PATIENT WHITEBOARD (CFCI), TOWEL DISPENSER (CFCI).
TOILET ROOM: TOWEL DISPENSER (CFCI), TOILET PAPER DISPENSER (CFCI), SEAT COVER DISPENSER (CFCI), COAT HOOK (CFCI), GRAB BARS (CFCI).

VENTURA COUNTY HEALTH CARE AGENCY

PUBLIC WORKS VENTURA COUNTY

ENGINEERING SERVICES

RASMUSSEN & ASSOCIATES
Architecture
Planning
Interiors
21 S. California Street
Fourth Floor
Ventura, California 93001
(805) 648-1234

PROFESSIONAL SEALS

LICENSED ARCHITECT JAY LOMAGNO C-23094 12-31-2022 STATE OF CALIFORNIA

PERMIT APPROVAL STAMP

REVIEWED IN ACCORDANCE WITH THE REQUIREMENTS OF T24, CCR
APPROVED
Department of Health Care Access and Information
FACILITIES DEVELOPMENT DIVISION
9/28/2022, 3:17:57 PM
H202495-56-00
Laura Baldrati

PERMIT NO HCAI #H202495-56-00

NO	REVISION	DATE
△		

PUBLIC WORKS PROJECT MANAGER

CONSULTANT PROJECT MANAGER
Jay Lomagno

DRAWN BY	CHECKED BY
R&A	JJL
CONSULTANT JOB NO A000495	DATE 06/15/2022

PROJECT TITLE AND ADDRESS

VENTURA COUNTY MEDICAL CENTER PEDIATRIC UNIT

300 HILLMONT AVE
VENTURA, CA 93003

COUNTY SPEC NUMBER
CP21-04

COUNTY PROJECT NUMBER
P6T20009

COUNTY DWG NO | SHEET 18 OF 89

SHEET TITLE
INTERIOR ELEVATIONS

SHEET NO
A7.2

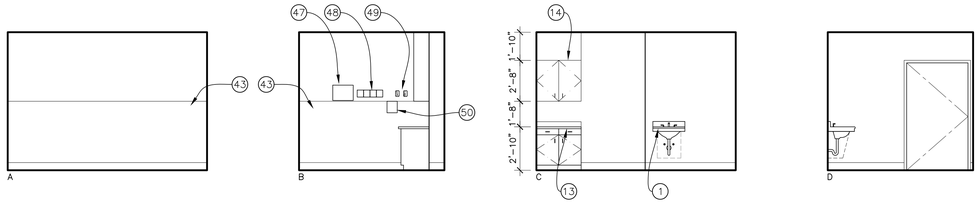

21 EXAM 2C36
SCALE 1/4" : 1'-0"

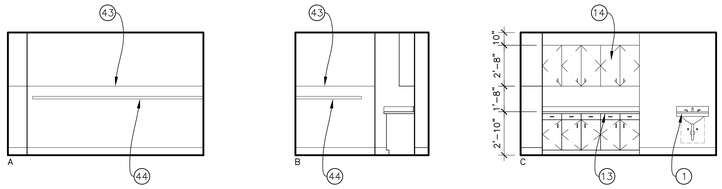

22 CLEAN UTILITY 2C46
SCALE 1/4" : 1'-0"

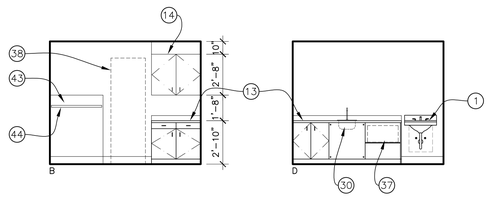

25 NOURISH 2C50
SCALE 1/4" : 1'-0"

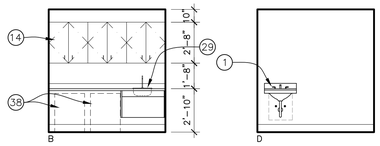

24 FORMULA 2C48
SCALE 1/4" : 1'-0"

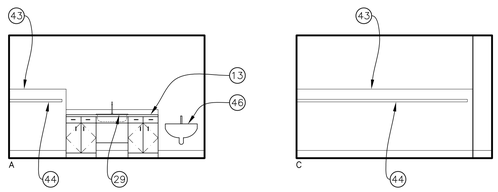

23 SOILED UTILITY 2C47
SCALE 1/4" : 1'-0"

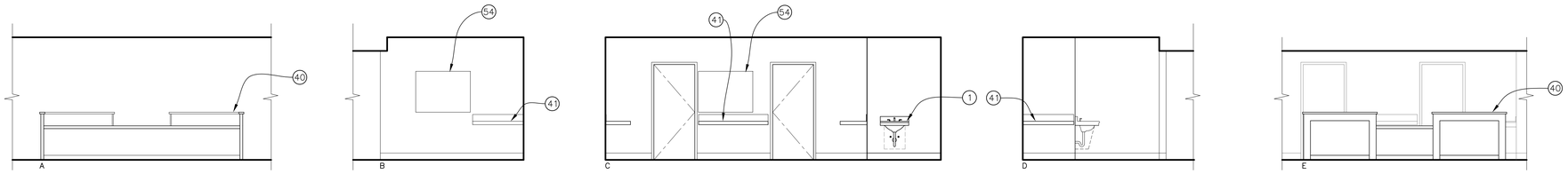

26 NURSE 2C49
SCALE 1/4" : 1'-0"

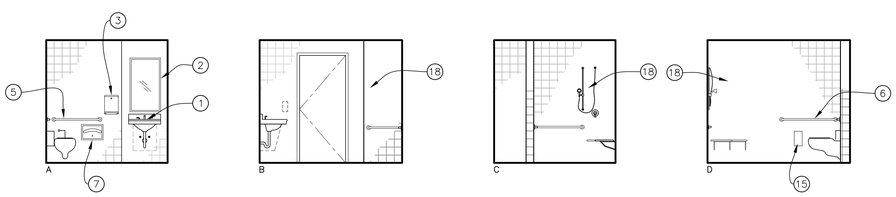

28 PATIENT SHOWER 2C52 (ACCESSIBLE)
SCALE 1/4" : 1'-0"

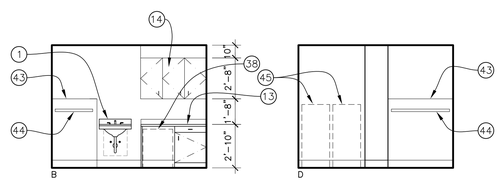

27 MEDS 2C51
SCALE 1/4" : 1'-0"

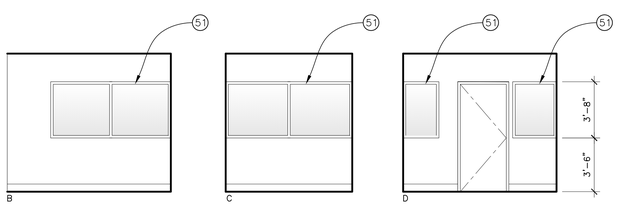

30 OFFICE 2C43
SCALE 1/4" : 1'-0"

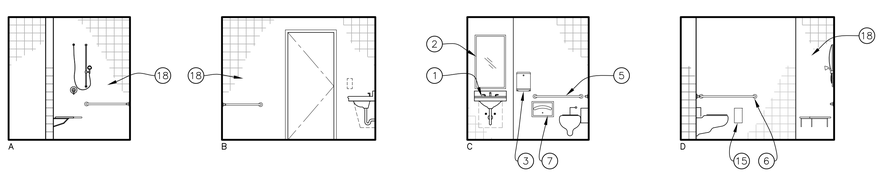

29 PATIENT SHOWER 2C53 (ACCESSIBLE)
SCALE 1/4" : 1'-0"

NOTE LEGEND

1. HANDWASH LAVATORY; SEE PLUMBING DRAWINGS AND DETAIL 12/A9.1.
2. MIRROR, BOTTOM OF VISIBLE SURFACE AT +39" MAX.
3. PAPER TOWEL DISPENSER, BOTTOM AT +40" MAX.
4. (NOT USED)
5. 36" LONG GRAB BAR; SEE DETAIL 4/A9.1.
6. 42" LONG GRAB BAR; SEE DETAIL 4/A9.1.
7. SEAT COVER DISPENSER; SEE DETAIL 5/A9.1.

8–12 (NOT USED)

13. SOLID SURFACE COUNTERTOP AND SPLASH WITH PLASTIC LAMINATE BASE CABINET BELOW; SEE DETAIL 14/A9.2. TOP OF COUNTER AT +34".
14. PLASTIC LAMINATE WALL–HUNG CABINET; SEE DETAIL 6/A9.2.
15. TOILET PAPER DISPENSER; SEE DETAIL 2/A9.1.

16–17 (NOT USED)

18. ACCESSIBLE CERAMIC TILE SHOWER STALL; SEE DETAIL 8/A9.1.

19–28 (NOT USED)

29. HANDWASH SINK IN SOLID SURFACE COUNTERTOP WITH ACCESSIBLE KNEE SPACE BELOW; SEE PLUMBING DRAWINGS AND DETAIL 10/A9.1.
30. SINK IN SOLID SURFACE COUNTERTOP; SEE PLUMBING DRAWINGS AND DETAIL 11/A9.1. PARALLEL APPROACH PROVIDED FOR ACCESSIBILTY TO SINK; KNEE AND TOE SPACE BELOW NOT REQUIRED. FACE OF CABINET BELOW SHALL BE A FIXED REMOVABLE PANEL.
31. EXISTING SOFFIT ABOVE.

32–36 (NOT USED)

37. OPEN SHELF FOR MICROWAVE.
38. REFRIGERATOR; SEE SHEET A2.5.
39. (NOT USED)
40. NURSE STATION; SEE DETAILS 1–4 AND 7 ON SHEET A9.2
41. SOLID SURFACE COUNTERTOP AND SPLASH CANTILEVERING FROM WALL; SEE DETAIL 5/A9.2.
42. (NOT USED)
43. WALL PROTECTION WAINSCOT, 48" ABOVE 6" HIGH BASE.
44. UNISTRUT AT +46" ON WALL FOR MOBILE RACK RESTRAINT; SEE DETAIL 6/A8.1.
45. AUTOMATED MED DISPENSING UNIT; SEE SHEET A2.5.
46. WALL–MOUNTED CLINIC SINK WITH BEDPAN WASHING FIXTURE; SEE PLUMBING.
47. MEDICAL GAS OUTLETS CENTERED AT +60" – EMPLOYEE WORK AREA.
48. OTOSCOPE HOLDER PANEL – EMPLOYEE WORK AREA.
49. CODE BLUE AND STAFF ASSIST STATIONS CENTERED AT +60" – EMPLOYEE WORK AREA.
50. WALL–MOUNTED TELEPHONE – TOP AT +54" – EMPLOYEE WORK AREA.
51. 1–HOUR RATED STOREFRONT SYSTEM; SEE DETAIL 4/A8.2.

52–53 (NOT USED)

54. 48"W. X 36"H. MAGNETIC WHITEBOARD WITH MARKER TRAY.

GENERAL NOTES

A. SEE DETAIL 14/A9.2 FOR ANCHORAGE OF BASE CABINETS.

B. SEE DETAIL 6/A9.2 FOR ANCHORAGE OF WALL–HUNG CABINETS AND FILLER PANEL TO CEILING.

C. CONTRACTOR SHALL PROVIDE BACKING AND INSTALLATION FOR THE FOLLOWING ACCESSORIES IN EACH PATIENT ROOM AND TOILET ROOM; LOCATIONS AT EACH ROOM TO BE CONFIRMED WITH ENGINEER:
PATIENT ROOM: GLOVE BOX RACK (OFCI), PATIENT WHITEBOARD (OFCI), TOWEL DISPENSER (CFCI).
TOILET ROOM: TOWEL DISPENSER (CFCI), TOILET PAPER DISPENSER (CFCI), SEAT COVER DISPENSER (CFCI), COAT HOOK (CFCI), GRAB BARS (CFCI).

VENTURA COUNTY HEALTH CARE AGENCY

PUBLIC WORKS VENTURA COUNTY

ENGINEERING SERVICES

RASMUSSEN & ASSOCIATES
Architecture
Planning
Interiors

21 S. California Street
Fourth Floor
Ventura, California 93001
(805) 648-1234

PROFESSIONAL SEALS

LICENSED ARCHITECT — STATE OF CALIFORNIA — 22-20807 — 9-21-22

PERMIT APPROVAL STAMP

REVIEWED IN ACCORDANCE WITH THE REQUIREMENTS OF T24, CCR
APPROVED
Department of Health Care Access and Information
FACILITIES DEVELOPMENT DIVISION
9/28/2022, 3:17:57 PM
H202495-56-00
Laura Baldrati

PERMIT NO HCAI #H202495-56-00

NO	REVISION	DATE
△	HCAI RESUBMITTAL	09/19/2022

PUBLIC WORKS PROJECT MANAGER

CONSULTANT PROJECT MANAGER: Jay Lomagno

DRAWN BY: R&A | CHECKED BY: JJL

CONSULTANT JOB NO: A000495 | DATE: 06/15/2022

PROJECT TITLE AND ADDRESS

VENTURA COUNTY MEDICAL CENTER PEDIATRIC UNIT

300 HILLMONT AVE
VENTURA, CA 93003

COUNTY SPEC NUMBER: CP21-04

COUNTY PROJECT NUMBER: P6T20009

COUNTY DWG NO | SHEET 19 OF 89

SHEET TITLE

INTERIOR ELEVATIONS

SHEET NO A7.3

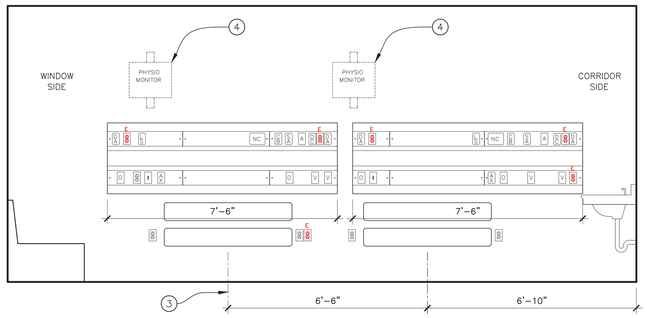

C HEADWALL @ PEDS 2C03
SCALE 1/2" : 1'-0"

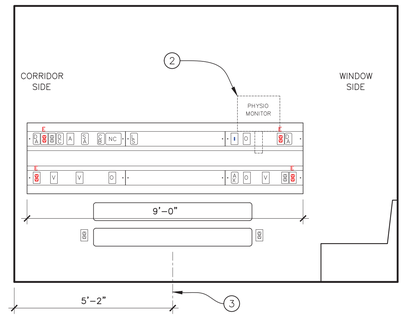

B HEADWALL @ ISOLATION 2C13
SCALE 1/2" : 1'-0"

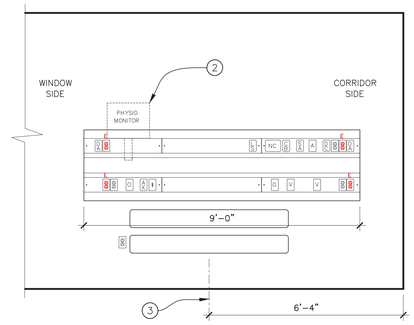

A HEADWALL @ TYP. PRIVATE ROOM
SCALE 1/2" : 1'-0"

NOTE: SEE DETAIL 6/A8.1 FOR ANCHORAGE OF ALL AMICO HEADWALLS TO 16 GA. BACKING IN WALL.

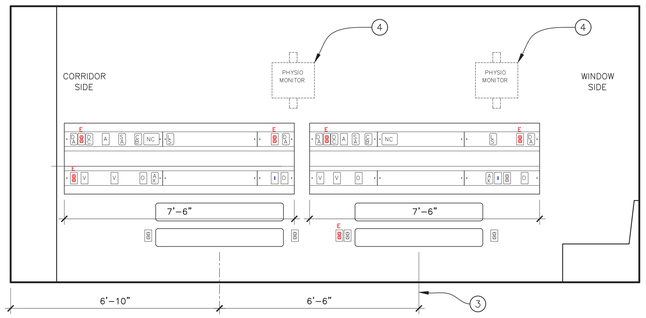

E HEADWALL @ PEDS 2C09
SCALE 1/2" : 1'-0"

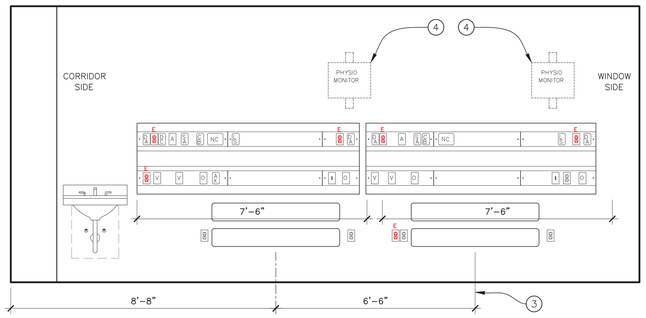

D HEADWALL @ PEDS 2C30
SCALE 1/2" : 1'-0"

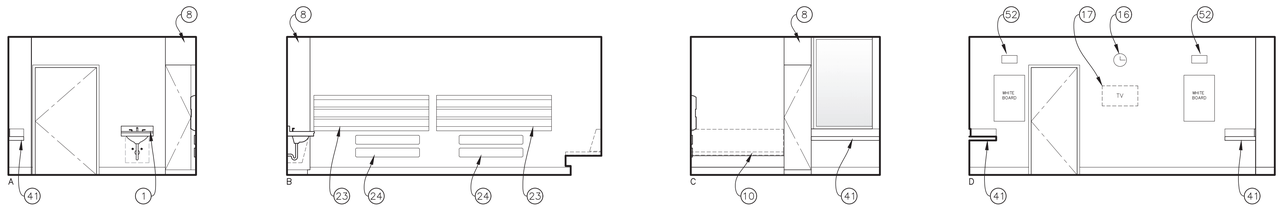

31 PEDS 2C09
SCALE 1/4" : 1'-0"

NOTE LEGEND

1. HANDWASH LAVATORY; SEE PLUMBING DRAWINGS AND DETAIL 12/A9.1.
2. PATIENT MONITOR ON HEADWALL BRACKET – WEIGHT LESS THAN 20#.
3. CENTERLINE OF BED AND BUMPER RAILS.
4. PATIENT MONITOR ON GCX WALL BRACKET – WEIGHT LESS THAN 20#.

5–7. NOT USED.

8. PATIENT WARDROBE CABINET; SEE DETAIL 8/A9.2.
9. NOT USED.
10. DAYBED; SEE DETAIL 10/A9.2.

11–15. NOT USED.

16. WALL MOUNTED DIGITAL CLOCK AND ANALOG CLOCK (WHERE SHOWN) CONNECTED TO CLOCK SYSTEMS.
17. WALL-MOUNTED FLAT-PANEL TV, WEIGHT LESS THAN 20#. PROVIDE BACKING PER STRUCTURAL DRAWINGS. TOP OF MOUNT AT +74".

18–22. NOT USED

23. ROOM-SPECIFIC HEADWALL; SEE ELEVATIONS ON SHEET A7.4.
24. 48" LONG BUMPER RAILS, CENTERED AT +17" AND +27" A.F.F.

25–40. NOT USED.

41. SOLID SURFACE COUNTERTOP AND SPLASH CANTILEVERING FROM WALL; SEE DETAIL 5/A9.2.

42–51 (NOT USED)

52. DIGITAL CLOCK CONNECTED TO CLOCK SYSTEM AT OPPOSITE HEADWALL.

HEADWALL SYMBOL LEGEND

E EMERG. POWER OUTLET	O OXYGEN OUTLET
N NORMAL POWER OUTLET	A MEDICAL AIR OUTLET
D DATA OUTLET	V VACUUM CONNECTION
L LIGHT CONTROL	S STAFF ASSIST CALL STATION
37 37–PIN CONNECTOR	B CODE BLUE CALL STATION
4 AUX 4–PIN CONNECTOR QUADRIPLEGIC NURSE CALL)	NC NURSE CALL STATION
	D DIGITAL CLOCK CONTROL

GENERAL NOTES

A. SEE DETAIL 14/A9.2 ANCHORAGE OF BASE CABINETS.

B. SEE DETAIL 6/A9.2 FOR ANCHORAGE OF WALL–HUNG CABINETS AND FILLER PANEL TO CEILING.

C. CONTRACTOR SHALL PROVIDE BACKING AND INSTALLATION FOR THE FOLLOWING ACCESSORIES IN EACH PATIENT ROOM AND TOILET ROOM; LOCATIONS AT EACH ROOM TO BE CONFIRMED WITH ENGINEER:
PATIENT ROOM: GLOVE BOX RACK (OFCI), PATIENT WHITEBOARD (OFCI), TOWEL DISPENSER (CFCI).
TOILET ROOM: TOWEL DISPENSER (CFCI), TOILET PAPER DISPENSER (CFCI), SEAT COVER DISPENSER (CFCI), COAT HOOK (CFCI), GRAB BARS (CFCI).

VENTURA COUNTY HEALTH CARE AGENCY
PUBLIC WORKS VENTURA COUNTY
ENGINEERING SERVICES

RASMUSSEN & ASSOCIATES
Architecture
Planning
Interiors
21 S. California Street
Fourth Floor
Ventura, California 93001
(805) 648-1234

PROFESSIONAL SEALS

PERMIT APPROVAL STAMP

REVIEWED IN ACCORDANCE WITH THE REQUIREMENTS OF T24, CCR
APPROVED
Department of Health Care Access and Information
FACILITIES DEVELOPMENT DIVISION
9/28/2022, 3:17:57 PM
H202495-56-00
Laura Baldrati

PERMIT NO HCAI #H202495-56-00

NO	REVISION	DATE
△		

PUBLIC WORKS PROJECT MANAGER

CONSULTANT PROJECT MANAGER
Jay Lomagno

DRAWN BY	CHECKED BY
R&A	JJL
CONSULTANT JOB NO A000495	DATE 06/15/2022

PROJECT TITLE AND ADDRESS

VENTURA COUNTY MEDICAL CENTER PEDIATRIC UNIT

300 HILLMONT AVE
VENTURA, CA 93003

COUNTY SPEC NUMBER
CP21-04

COUNTY PROJECT NUMBER
P6T20009

COUNTY DWG NO — SHEET 20 OF 89

SHEET TITLE
INTERIOR ELEVATIONS

SHEET NO
A7.4

EASE — EQUIPMENT ANCHORAGE & SEISMIC ENGINEERING
www.EquipmentAnchorage.com

AMICO CORPORATION

MAJESTIC HORIZONTAL HEADWALL (SINGLE & 2 TIER WITH NO CHASE)

DES.	J. ROBERSON	SHEET	4
JOB NO.	11-1521		
DATE	9/2/15	OF	5 SHEETS

SEISMIC SUPPORTS & ATTACHMENTS — WALL MOUNTED

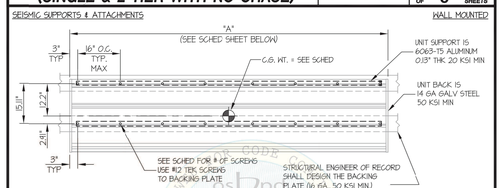

FRONT ELEVATION
(2 TIER SHOWN)

UNIT NUMBER	* MAX WEIGHT (lb)	# OF SCREWS	TOP SCREWS	BOTTOM SCREWS	"A" (in)	Tu (lb)	Vu (lb)
HW00-02T-P-M048 TO M060	150	8	4	4	48-60	96	86
HW00-02T-P-M061 TO M096	240	12	6	6	61-96	103	91
HW00-02T-P-M097 TO M120	300	16	8	8	97-120	96	86

* HEIGHTS INCLUDES EQUIPMENT + CONTENTS

NOTES:
1. FORCES ARE DETERMINED PER 2013 CALIFORNIA BUILDING CODE AND ASCE 7-10. STRENGTH DESIGN IS USED. (S_{DS} = 2.20, a_p = 1.0, I_p = 1.5, R_p = 1.5, z/h ≤ 1)
   HORIZONTAL FORCE (E_h) = 2.64 W_p
   VERTICAL FORCE (E_v) = 0.44 W_p
2. CENTER OF GRAVITY (C.G.) AND WEIGHT ARE THE GOVERNING PARAMETERS FOR DESIGN. THIS PREAPPROVAL ENCOMPASSES ALL WEIGHTS UP TO THE MAXIMUM WEIGHT SHOWN.
3. STRUCTURAL ENGINEER OF RECORD FOR THE BUILDING SHALL PROVIDE SUPPORT STRUCTURE DESIGNED TO SUPPORT WEIGHTS AND FORCES SHOWN IN COMBINATION WITH ALL OTHER LOADS THAT MAY BE PRESENT.
4. SEE GENERAL NOTES: SHEETS 1

REGISTERED PROFESSIONAL ENGINEER — JONATHAN ROBERSON — No. 41197 — EXP. 6-30-2016 — 9/2/15 — STRUCTURAL — STATE OF CALIFORNIA

09/16/2015 OPM-0251-13: Reviewed for Code Compliance by William Staehlin Page 6 of 7

WALL STUDS BEHIND HEADWALLS:
EXISTING STUDS SHALL BE MINIMUM 400S137-33 (4"x20 GA W/ 1-3/8" FLANGES)
NEW STUDS SHALL BE FULL-HEIGHT 400S137-54 (4"x16 GA W/ 1-3/8" FLANGES

6 HEADWALL ANCHORAGE
SCALE 1" : 1'-0"

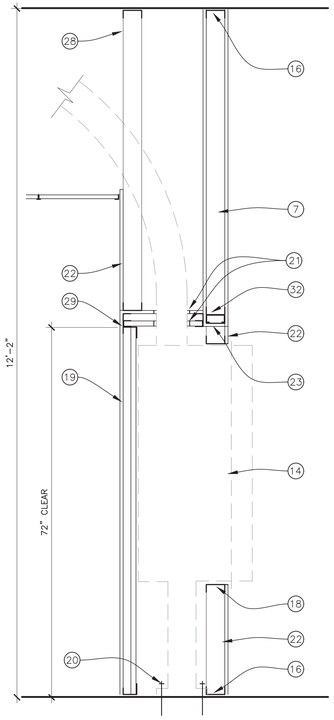

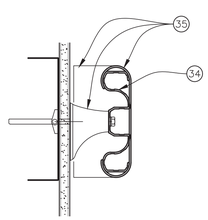

7 CORRIDOR HANDRAILS
NOT TO SCALE

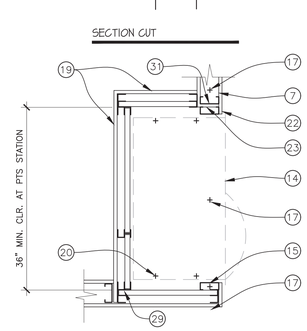

4 PTS STATION: ANCHORAGE & 1-HOUR RATED ENCLOSURE
SCALE 1" : 1'-0"

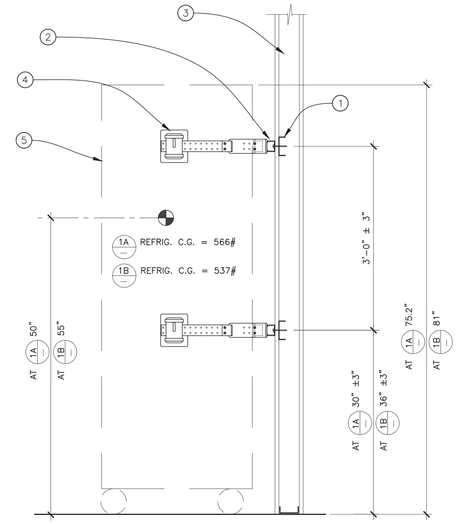

1A 1B REFRIGERATOR RESTRAINT
SCALE 1" : 1'-0"

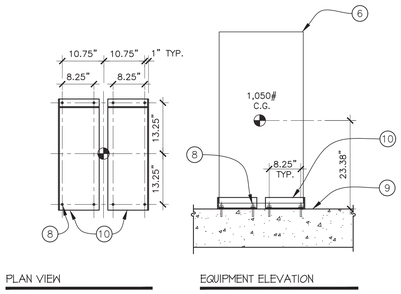

2 PYXIS MEDSTATION & AUXILIARY
N.T.S.

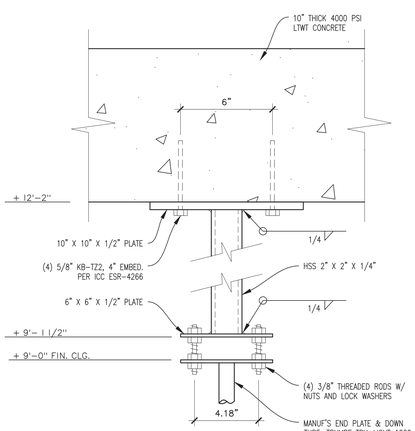

8 EXAM LIGHT - VCMC PEDS
SCALE 3" : 1'-0"

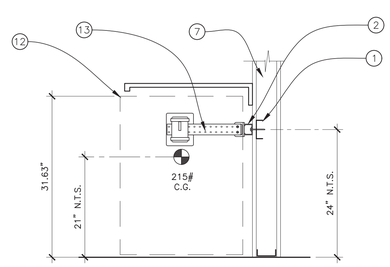

5 MED. REFRIGERATOR RESTRAINT
SCALE 1" : 1'-0"

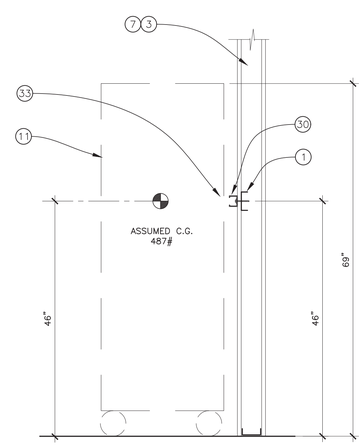

3 MOBILE WIRE RACK RESTRAINT
SCALE 1" : 1'-0"

NOTE LEGEND

1. STEEL TRACK BACKING PLATE, 16 GA., PER DETAIL 2/S1.31, SPANNING OVER (3) EXISTING 16 GA STUDS. TYPICAL AT STRAP LOCATIONS. REMOVE GYPSUM BOARD AND PATCH BACK AS REQUIRED TO INSTALL BACKING PLATE.
2. UNISTRUT P1000 WITH #10 SCREWS THROUGH ONE LAYER OF 5/8" GYPSUM BOARD TO BACKING PLATE. LOCATE (3) SCREWS AT 6" O.C. BETWEEN EACH STUD TO BACKING PLATE – (6) SCREWS TOTAL. TYPICAL AT EACH STRAP LOCATION.
3. EXISTING 4" STUDS WITH 5/8" GYPSUM BOARD FINISH BOTH SIDES. VERIFY STUD GAUGE; IF LIGHTER THAN 16 GAUGE, SISTER NEW 16 GA. STUDS FULL-HEIGHT TO EACH EXISTING STUD BEHIND BACKING PLATES. SCREW WEBS OF NEW AND EXISTING STUDS TOGETHER W/ #10 SCREWS AT 12" O.C.
4. SAFE-T-PROOF STP-MP-203-09 POWDER COATED STRAP ASSEMBLIES PER ICC ESR 4167. BOLTED ASSEMBLIES TO UNISTRUT WITH 3/8" UNISTRUT BOLTS AND CHANNEL NUTS; TORQUE TO 19 FT-LBS. TYPICAL FOR (2) STRAP ASSEMBLIES AT EACH SIDE OF REFRIGERATOR, (4) TOTAL.
5. TRUE T-23 DT-HC REFRIGERATOR.
6. PYXIS MEDSTATION MEDICATION DISPENSER OR 7-DRAWER AUXILIARY DISPENSER (1,050 LBS.).
7. 4" X 16 GA STUDS AT 16" O.C.; SEE STUD WALL FRAMING DETAILS IN STRUCTURAL DRAWINGS.
8. ANCHOR EACH CORNER OF PYXIS CABINET BRACKET WITH (1) 3/8" HILTI KB-TZ W/ 2" MIN. EMBEDMENT, INSTALLED PER ESR-1917 AND "EXPANSION ANCHOR NOTES" BELOW, THROUGH 7/16" MOUNTING HOLE IN ANCHORING BRACKET (8 ANCHORS TOTAL PER CABINET) – TYPICAL. PROVIDE LOCK WASHER UNDER NUT.
9. EXISTING 10" THICK 4000 PSI LIGHTWEIGHT CONCRETE (115 PCF) 2-WAY SLAB.
10. O.F.C.I. MANUFACTURER'S SEISMIC ANCHORING BRACKET PER OPM-0207-13.
11. MOBILE WIRE RACK SHELVING
12. MEDICATION REFRIGERATOR, FOLLETT REF2.
13. SAFE-T-PROOF STP-MP-202 POWDER COATED STRAP ASSEMBLY AT EACH SIDE OF REFRIGERATOR, (2) TOTAL.
14. PNEUMATIC TUBE STATION, 240# MAXIMUM; SEE PNEUMATIC TUBE SYSTEM (PTS) DRAWINGS FOR EXACT CLEAR DIMENSION OF ENCLOSURE AROUND PTS STATION. ANCHOR STATION TO FLOOR PER DETAIL ON STRUCTURAL SHEETS OF PTS DRAWINGS.
15. 400S138-54 (16 GA) NESTED STUD AND TRACK, FULL HEIGHT TO STRUCTURE ABOVE, ON EACH SIDE OF STATION. FASTEN TO TOP AND BOTTOM TRACKS PER STUD WALL FRAMING DETAILS.
16. EXISTING OR NEW 4" TRACK, 20 GA. MINIMUM, AT TOP AND BOTTOM OF FULL-HEIGHT STUDS. NOTCH SILL TRACK AS REQUIRED FOR PTS STATION BASE ANCHORAGE PLATES. ANCHOR TRACK PER STUD WALL FRAMING DETAILS.
17. ANCHOR TOP AND BOTTOM TRACK TO 10" THICK CONCRETE SLAB WITH 3/8" HILTI KB-TZ2 ANCHORS, 1-1/2" EMBEDMENT, PER ICC ESR 4266. LOCATE ONE ANCHOR WITHIN 6" OF EACH EDGE OF STATION, AND ONE APPROX. MIDDLE OF STATION – 3 ANCHORS TOTAL, AT TOP AND BOTTOM TRACKS.
18. 400T15-54 (16 GA) TRACK AT HEAD AND SILL OF OPENING FOR STATION.
19. PROVIDE 1-HOUR RATED ENCLOSURE AROUND SIDES, BACK AND TOP OF PTS STATION – INSTALL AFTER COMPLETION OF PTS STATION AND CONDUIT: USG SHAFTWALL SYSTEM, WITH 2-1/2" x 20 GA. STUDS AND TRACK, 1" SHAFTWALL LINER PANELS, AND ONE LAYER, 5/8" TYPE X GYPSUM BOARD FOR ONE-HOUR RATED CORRIDOR WALL FIRE PARTITION. ONE-HOUR RATING PER UL U415. FASTEN SILL TRACK TO DECK WITH 0.145 SHOT PINS, 1-1/4" MIN. PENETRATION, 3 PER TRACK SECTION.
20. HILTI KB-TZ2 ANCHORS LOCATIONS PER PTS STRUCT. DRAWINGS; TYP. FOR (4).
21. THROUGH-PENETRATION FIRESTOP PER PTS DRAWINGS.
22. NON-RATED FRAMING WITH ONE-SIDE GYPSUM BOARD FINISH.
23. APPLY ONE LAYER OF 5/8" TYPE X GYPSUM BOARD TO WEB OF STUD AND TRACK.
24-27 (NOT USED)
28. 4" X 20 GA STUDS AT 16" O.C., WITH SLIP CONNECTION AT HEAD; SEE STUD WALL FRAMING DETAILS.
29. CONNECT SHAFTWALL TRACKS TOGETHER AND CORNER STUDS TOGETHER WITH #10 SCREWS AT 12" O.C., MINIMUM THREE SCREWS PER TRACK SECTION OR STUD CONNECTION.
30. UNISTRUT P1000 WITH #10 SCREWS AT 8" O.C. THROUGH ONE LAYER OF 5/8" GYPSUM BOARD TO BACKING PLATE. PROVIDE 1/2" EYE BOLT OR UNISTRUT ANGLE WITH 1/2" BOLT TO UNISTRUT NUT AT EACH SIDE OF WIRE RACK.
31. STUD AT JAMB; SCREW THROUGH GYPSUM BOARD TO 16 GA JAMB STUD WITH #10 SCREWS AT 6" O.C.
32. HEADER FRAMING PER STUD WALL FRAMING DETAILS.
33. RESTRAINT CABLE OR CHAIN AROUND BACK VERTICAL POSTS OF WIRE RACK, FASTENED TO EYE BOLT OR ANGLE AT UNISTRUT. CABLE OR CHAIN AND FASTENER SHALL BE RATED AT MINIMUM 400 LBS WORKING LOAD.
34. ALUMINUM HANDRAIL EXTRUSION – REINSTALL EXISTING WHERE OCCURS.
35. REPLACE ALL SUPPORT BRACKETS, END CAPS, AND COVERS AT REINSTALLED HANDRAILS.

EXPANSION ANCHOR NOTES

SEE NOTES FOR POST-INSTALLED ANCHORS AND EXPANSION ANCHOR TESTING ON SHEET S1.00.

SCREW NOTES

A. WHERE SCREWS ARE NOTED IN THE DETAILS, THEY SHALL BE TEKS SELF-DRILLING SCREWS, PER ICC ESR-1976, OR APPROVED EQUAL.

B. PENETRATION OF SCREWS THROUGH JOINED MATERIAL SHALL NOT BE LESS THAN THREE EXPOSED THREADS.

VENTURA COUNTY HEALTH CARE AGENCY
PUBLIC VENTURA COUNTY WORKS
ENGINEERING SERVICES

RASMUSSEN & ASSOCIATES
Architecture
Planning
Interiors
21 S. California Street
Fourth Floor
Ventura, California 93001
(805) 648-1234

PROFESSIONAL SEALS

PERMIT APPROVAL STAMP
REVIEWED IN ACCORDANCE WITH THE REQUIREMENTS OF T24, CCR
APPROVED
Department of Health Care Access and Information
FACILITIES DEVELOPMENT DIVISION
9/28/2022, 3:17:57 PM
H202495-56-00
Laura Baldrati

PERMIT NO HCAI #H202495-56-00

NO	REVISION	DATE
△		

PUBLIC WORKS PROJECT MANAGER
CONSULTANT PROJECT MANAGER Jay Lomagno
DRAWN BY R&A — CHECKED BY JJL
CONSULTANT JOB NO A000495 — DATE 06/15/2022

PROJECT TITLE AND ADDRESS

VENTURA COUNTY MEDICAL CENTER PEDIATRIC UNIT

300 HILLMONT AVE
VENTURA, CA 93003

COUNTY SPEC NUMBER CP21-04
COUNTY PROJECT NUMBER P6T20009
COUNTY DWG NO — SHEET 21 OF 89

SHEET TITLE
DETAILS

SHEET NO A8.1

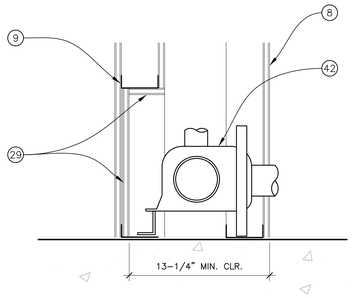

12 RECESS IN RATED WALL
NOT TO SCALE

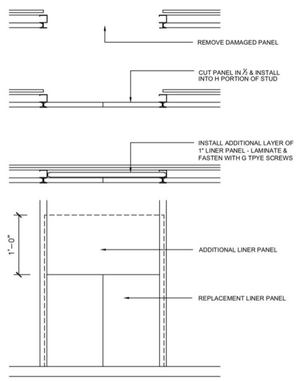

LINER PANEL REPLACEMENT

SCALE: DATE:

UNITED STATES GYPSUM COMPANY

This detail was based upon and is valid without the testing of the assemblies shown and is not warranted to verify the suitability of the design for a given structure.

13 SHAFTWALL REPAIR
NOT TO SCALE

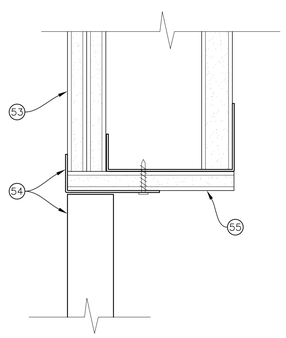

14 ACCESS DOOR @ SHAFT
SCALE: 6" : 1'-0"

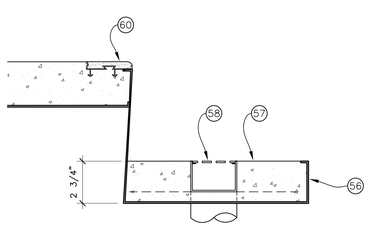

15 TRENCH DRAIN @ STAIR
SCALE: 3" : 1'-0"

THIS DETAIL IS FOR REFERENCE ONLY; FIRE ASSEMBLIES SHALL BE INSTALLED IN STRICT ACCORDANCE WITH THEIR LISTING AND THE MANUFACTURER'S PRINTED INSTALLATION INSTRUCTIONS. MANUFACTURER'S INSTALLATION INSTRUCTIONS SHALL BE AVAILABLE ON-SITE FOR REVIEW BY THE OSHPD FIRE MARSHAL.

UL SYSTEM HW-D-0108

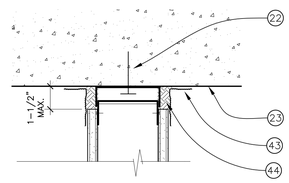

7 HEAD OF RATED WALL
SCALE 3" : 1'-0"

UL SYSTEM BW-S-0002

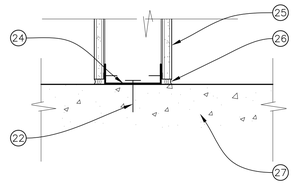

8 BOTTOM OF RATED WALL - SILL TRACK
SCALE 3" : 1'-0"

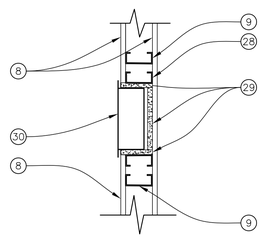

PLAN VIEW

9 1-HOUR ENCLOSURE FOR RECESSED PANEL OR CABINET
SCALE 1-1/2" : 1'-0"

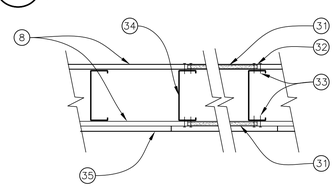

NOTE: GYPSUM BOARD CEILINGS SHALL BE APPLIED FIRST TO THE CEILING FRAMING MEMBERS AND THEN TO THE WALLS IN ACCORDANCE WITH ASTM C840.

10 1 HR. RATED CEILING CONSTRUCTION
NTS

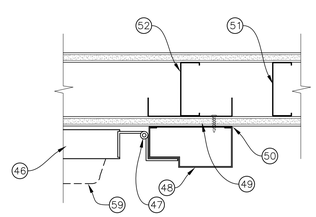

11 DBL-EGRESS JAMB (HEAD SIM.)
SCALE: 3" : 1'-0"

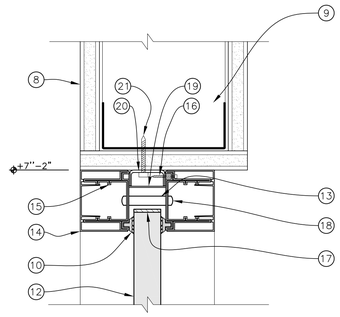

A HEAD / JAMB

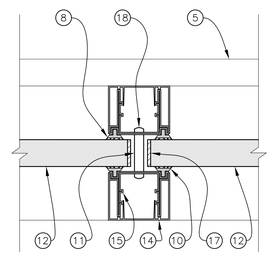

B VERTICAL MULLION

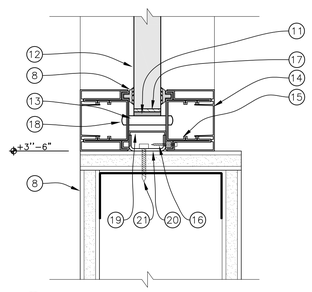

C SILL

STOREFRONT FRAMING SYSTEM SHALL BE TGP "ALUMINUM SERIES", STEEL FRAME WITH ALUMINUM COVERS, 60-MINUTE RATED WITH HOSE STREAM TEST, PER UL FILE R25274 DESIGN U558

4 RATED INTERIOR STOREFRONT
SCALE 6" : 1'-0"

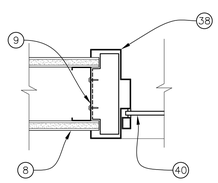

5 HOLLOW METAL WINDOW FRAME
SCALE: 3" : 1'-0"

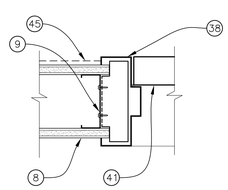

6 HOLLOW METAL DOOR FRAME
SCALE: 3" : 1'-0"

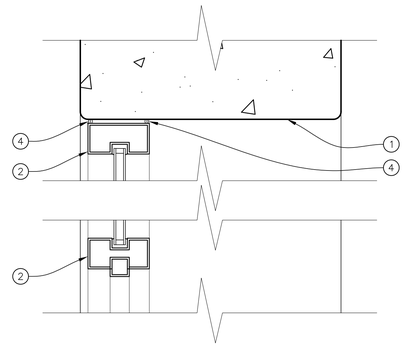

1 STOREFRONT HEAD
SCALE 3" : 1'-0"

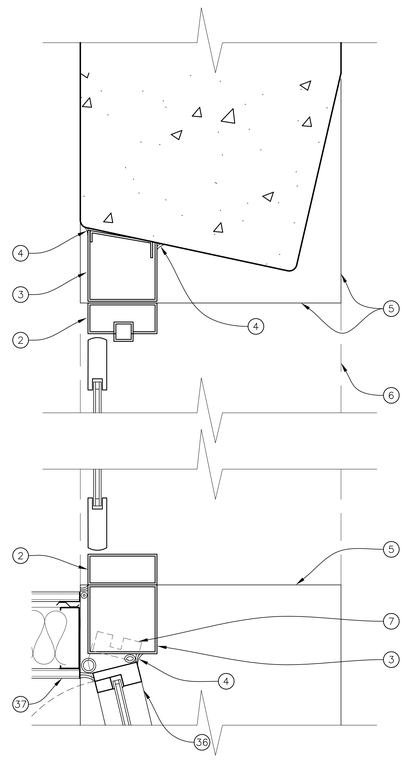

2 STOREFROM JAMBS
SCALE 3" : 1'-0"

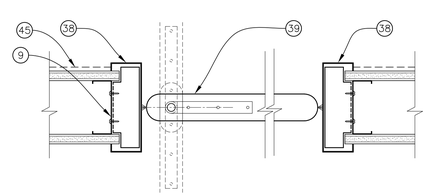

3 DOUBLE-SWING DOOR FRAME
SCALE 3" : 1'-0"

NOTE LEGEND

1. EXISTING CONCRETE EXTERIOR WALL / PILASTER.
2. 2" x 4-1/2" ALUMINUM STOREFRONT FRAMING AND STOREFRONT DOOR, BLACK ANODIZED, WITH INSULATED GLAZING
3. BRAKE-SHAPE ALUMINUM AND/OR TUBE SECTIONS AS FILLER PANELS
4. SEALANT.
5. FACE OF WINDOW SILL BELOW.
6. LINE OF DEMOLISHED CONCRETE BULKHEAD WALL BELOW EXISTING WINDOW.
7. APPROXIMATE PROFILE, REMOVED WINDOW FRAME AND COVER PLATE.
8. 5/8" TYPE "X" GYPSUM BOARD
9. 4" METAL STUDS – SEE STUD WALL FRAMING DETAILS.
10. GASKET
11. SETTING BLOCK
12. 7/8" 1-HOUR RATED PILKINGTON PYROSTOP 60-101 GLAZING.
13. CONNECTING BRACE
14. ALUMINUM COVER CAP
15. MULLION
16. #6 x 1" PAN HEAD SHEET METAL SCREW.
17. INTUMESCENT TAPE
18. STAINLESS M6 BHSC SCREW
19. SPACER
20. ANCHOR
21. #14 SCREW @ 16" O.C.
22. FASTEN TOP AND BOTTOM TRACKS TO FLOOR SLABS PER STUD WALL FRAMING DETAILS IN STRUCTURAL DRAWINGS.
23. EXISTING 10" THICK 3000 PSI CONCRETE FLOOR DECK ABOVE.
24. SILL TRACK PER STUD WALL FRAMING DETAILS IN STRUCTURAL DRAWINGS.
25. 5/8" TYPE "X" GYPSUM BOARD FINISH, SCREW TO FRAMING WITH 1" SCREWS AT 12" O.C. DO NOT SCREW TO SLIP TRACK. TYPICAL WALL FINISH U.N.O. ONE-HOUR RATING PER GYP. ASSOC. FILE WP1350.
26. FIRE CAULKING: HILTI FS-ONE, MIN. 5/8" THICK, MAX. 3/4" HIGH JOINT. ONE-HOUR RATING PER UL BW-S-0002.
27. EXISTING 10" THICK 3000 PSI CONCRETE FLOOR DECK BELOW.
28. METAL STUD BLOCKING AT JAMB, HEAD AND SILL OF RECESS.
29. ONE LAYER OF 5/8" TYPE "X" GYPSUM BOARD AT TOP, SIDES AND BACK OF RECESS.
30. RECESSED PANEL, EXTINGUISHER CABINET, OR FIXTURE.
31. 5/8" TYPE "X" GYPSUM BOARD PATCH AS NEEDED FOR EXISTING ONE-HOUR RATED CONSTRUCTION AT CORRIDOR CEILING. COMPLY WITH ASTM C840-11.
32. CUT EXISTING GYPSUM BOARD AT CENTER OF EXISTING FRAMING MEMBERS WHERE POSSIBLE. OTHERWISE, BLOCK WITH NEW METAL FRAMING TO SUPPORT EDGE OR GYPSUM BOARD PATCH.
33. ATTACH GYPSUM BOARD TO (E) FRAMING OR (N) BLOCKING WITH ASTM C1002 TYPE "S" SCREWS WITH CORROSION RESISTANT TREATMENT AT 12" O.C. MAX.
34. EXISTING METAL JOIST OR (N) METAL BLOCKING TO MATCH (E) JOIST AS NEEDED.
35. ACOUSTIC TILE WHERE OCCURS; SEE CEILING PLAN.
36. EXISTING WINDOW WITH INSWING FUNCTION DISABLED.
37. WALL TYPE A6. LOCATE WALL TO AVOID CONFLICT WITH INSWING WINDOW PATH.
38. HOLLOW METAL DOOR FRAME AND ANCHORS.
39. DOOR WITH DOUBLE-ACTING PIVOT HARDWARE AND OUTSWING RELEASE LATCH.
40. TEMPERED GLAZING WITH APPLIED STOPS & GLAZING TAPE.
41. DOOR. SEE DOOR SCHEDULE.
42. TOILET FIXTURE CARRIER. SEE PLUMBING DRAWINGS.
43. INTUMESCENT SEALANT: RECTORSEAL FLAMESAFE FS3000, MIN. 1/16" DRY THICKNESS (1/8" WET THICKNESS), OVERLAPPING 1/2" ONTO GYPSUM BOARD AND CONCRETE.
44. MINERAL WOOL BATT INSULATION, 4 PCF DENSITY, COMPRESSED 50% TO FIT TIGHT FULL DEPTH OF GYP BOARD: THERMAFIBER SAF OR EQUAL.
45. CERAMIC TILE FINISH WHERE OCCURS.
46. HOLLOW METAL DOOR.
47. SWING-CLEAR HINGE.
48. DOUBLE EGRESS JAMB PROFILE, 5-3/4" WIDE AT JAMB.
49. RATED GYPSUM BOARD FINISH FOR CORRIDOR SHALL EXTEND CONTINUOUS BEHIND DOOR FRAME.
50. PROVIDE CONTINUOUS SOLID SHIM BEHIND DOOR FRAME, APPROXIMATELY 5/32" THICK; CAULK AND PAINT GAP AT BACK OF DOOR FRAME.
51. EXISTING 4" STUD FRAMING – VERIFY EXISTING LOCATION.
52. 4"x16 GAUGE STUD AND 6"x16 GAUGE TRACK SECTION TO PROVIDE BACKING FOR DOOR FRAME FASTENERS.
53. EXISTING SHAFTWALL CONSTRUCTION: (2) LAYERS OF 5/8" TYE X GYPSUM BOARD ON FACE OF SHAFTWALL FRAMING, WITH 1 LAYER OF 1" SHAFTWALL LINER AT BACK OF WALL FRAMING.
54. 90-MINUTE RATED SELF-CLOSING STEEL ACCESS DOOR AND FRAME ASSEMBLY. SCREW TO FRAMING PER MANUFACTURER'S INSTALLATION INSTRUCTIONS.
55. ALL FOUR SIDES OF OPENING TO BE LINED WITH ONE LAYER OF 5/8" TYPE X GYPSUM BOARD; PROVIDE NEW IF NOT ALREADY EXISTING.
56. METAL PAN STAIRS; SEE STRUCTURAL DETAILS
57. CONCRETE FILL.
58. 3" WIDE x 2" DEEP X 60" LONG THRESHOLD DRAIN WITH DRAIN OUTLET DAYLIGHTING BELOW TREAD. SEE PLUMBING DRAWINGS.
59. NON-LATCHING SEMI-RECESSED ELECTRIC PANIC DEVICE. 1-5/8" MAX. PROJECTION FROM DOOR PROVIDES 44-3/8" CLEARANCE TO EDGE OF OPPOSITE DOOR LEAF.
60. CAST IN PLACE ALUMINUM NOSING AT STAIR TREADS.

VENTURA COUNTY HEALTH CARE AGENCY

PUBLIC WORKS VENTURA COUNTY

ENGINEERING SERVICES

RASMUSSEN & ASSOCIATES
Architecture
Planning
Interiors
21 S. California Street
Fourth Floor
Ventura, California 93001
(805) 648-1234

PROFESSIONAL SEALS

LICENSED ARCHITECT JAY LOMAGNO C-20807 EXP. 12-31-22 STATE OF CALIFORNIA

PERMIT APPROVAL STAMP

REVIEWED IN ACCORDANCE WITH THE REQUIREMENTS OF T24, CCR
APPROVED
Department of Health Care Access and Information
FACILITIES DEVELOPMENT DIVISION
9/28/2022, 3:17:57 PM
H202495-56-00
Laura Baldrati

PERMIT NO HCAI #H202495-56-00

NO	REVISION	DATE
△	HCAI RESUBMITTAL	09/19/2022

PUBLIC WORKS PROJECT MANAGER

CONSULTANT PROJECT MANAGER Jay Lomagno

DRAWN BY	CHECKED BY
R&A	JJL

CONSULTANT JOB NO	DATE
A000495	06/15/2022

PROJECT TITLE AND ADDRESS

VENTURA COUNTY MEDICAL CENTER PEDIATRIC UNIT

300 HILLMONT AVE
VENTURA, CA 93003

COUNTY SPEC NUMBER CP21-04

COUNTY PROJECT NUMBER P6T20009

COUNTY DWG NO — SHEET 22 OF 89

SHEET TITLE

DETAILS

SHEET NO A8.2

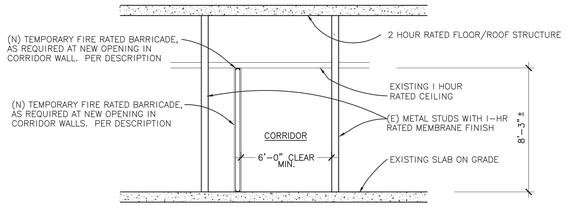

RATED CORRIDOR CEILING CONDITION

REQUIREMENTS FOR OPENINGS AND PENETRATIONS AT RATED CONSTRUCTION

1. PENETRATIONS: ANY NEW PENETRATIONS THROUGH CORRIDOR WALLS, BUILDING/SMOKE SEPARATION WALLS, OR FLOOR/ROOF STRUCTURAL DECKS SHALL BE FIRESTOPPED; SEE DETAILS ON MECHANICAL AND ELECTRICAL DRAWINGS.
2. CORRIDOR CONSTRUCTION OPENINGS: ANY OPENINGS IN THE EXISTING CORRIDOR WALL DURING THE CONSTRUCTION PROCESS SHALL BE PROTECTED BY A TEMPORARY BARRICADE. TEMPORARY BARRICADE SHALL BE ONE-HOUR RATED CONSTRUCTION: OPTION I: 2-1/2 X 25 GAUGE USG SHAFTWALL STUDS AT 24" O.C. WITH I" GYPSUM SHAFT LINER ONE SIDE, AND 5/8" TYPE X GYPSUM BOARD ONE SIDE (I-HOUR RATING PER NER 258); OPTION 2: 2-1/2" X 25 GAUGE STUDS AT 24" O.C. WITH 5/8" TYPE X GYPSUM BOARD BOTH SIDES (I-HOUR RATING PER GYPSUM ASSOC. WP 1340). FASTEN SILL TRACK TO FLOOR WITH SHOT PINS AT 32" O.C.; SEE WALL FRAMING DETAILS AND NOTES FOR SHOT PIN REQUIREMENTS. FASTEN METAL FRAMING WITH #8 SCREWS AT 24" O.C. BARRICADE DOORS SHALL BE 20 MINUTE "S" RATED ASSEMBLIES, SELF-CLOSING WITH SMOKE AND DRAFT SEALS.
3. COORDINATE WITH IOR AND OSHPD FIELD FIRE & LIFE SAFETY OFFICER FOR APPROVALS PRIOR TO CONSTRUCTION (CODE APPLICATION NOTICE NO. 9-3301)
4. TEMPORARY BARRIERS SHALL CONFORM TO UL SYSTEM U425.

8 TEMPORARY BARRICADE AT OCCUPIED EXISTING CORRIDORS

N.T.S.

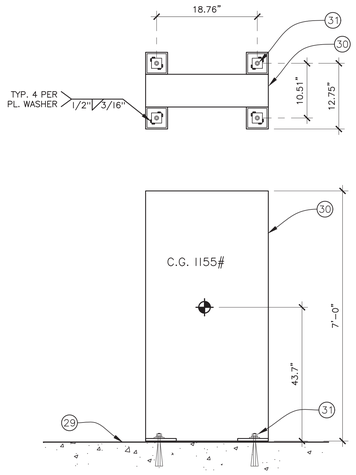

NOTE: DETAILED ANCHORAGE ABOVE MATCHES THE ANCHORAGE FOR THIS RACK IN O.P.M. 0249-13

9 2-POST SEISMIC RACK ANCHORAGE

N.T.S.

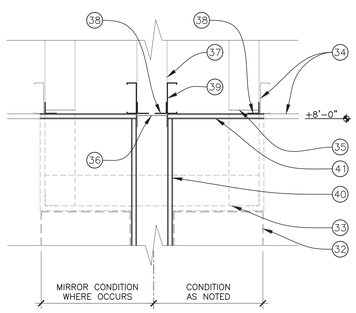

10 CEILING AT DEMOLISHED SOFFIT

1-1/2" = 1'-0"

5/9/2017 9:06:06 AM

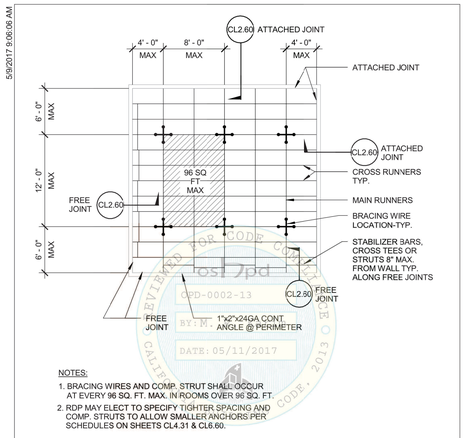

NOTES:
1. BRACING WIRES AND COMP. STRUT SHALL OCCUR AT EVERY 96 SQ. FT. MAX. IN ROOMS OVER 96 SQ. FT.
2. RDP MAY ELECT TO SPECIFY TIGHTER SPACING AND COMP. STRUTS TO ALLOW SMALLER ANCHORS PER SCHEDULES ON SHEETS CL4.31 & CL6.60.

Section Title : OSHPD STANDARD SUSPENDED CEILING DETAILS	OPD No:
Sheet Title : TYPICAL CEILING PLAN FOR $1.15 < S_{DS} \leq 1.73$ AND z/h <= 1.0	CL2.21

05/11/2017 OPD-0002-13: Reviewed for Code Compliance by Karim Page 30 of 66

6 SUSPENDED CEILING PLAN

NTS

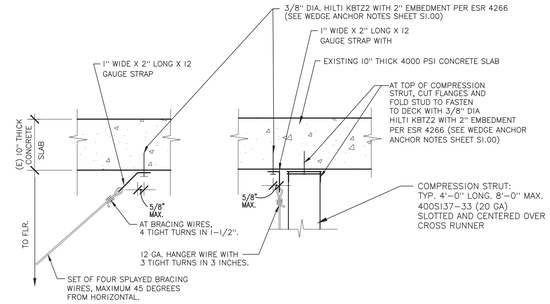

BRACING WIRE @ CONC. (B)

VERTICAL STRUT & HANGER WIRE @ CONC. (A)

NOTE: BRACING WIRES AND VERTICAL STRUT MAY BE OMITTED AT ROOMS 144 S.F. OR LESS.

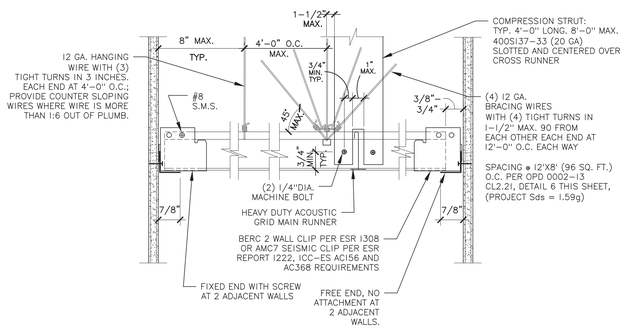

7 SUSPENDED ACOUSTIC CEILING

N.T.S.

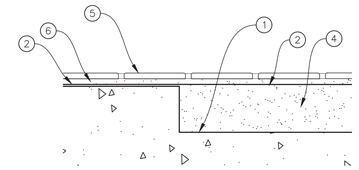

1 RECESSED SLAB AT SHOWER ROOM

SCALE: 6" = 1' - 0"

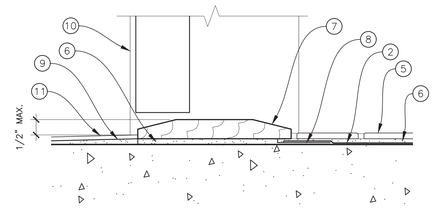

2 DOOR THRESHOLD AT SHOWER ROOM

SCALE: 6" = 1' - 0"

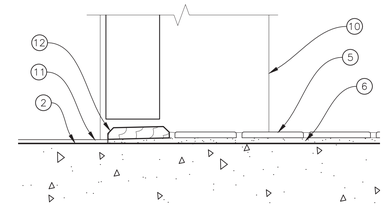

3 DOOR THRESHOLD AT TOILET ROOM

SCALE: 6" = 1' - 0"

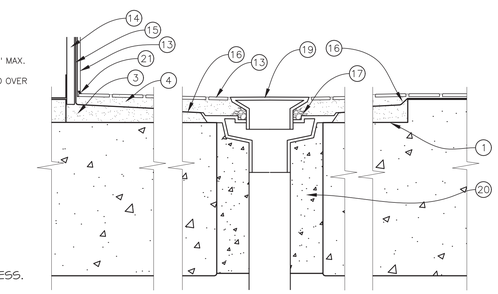

4 TILE AT SHOWER RECEIVER

SCALE: 6" = 1' - 0"

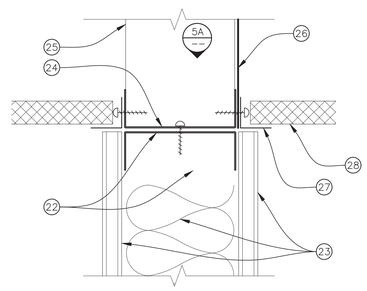

5 TOP OF PATIENT ROOM PARTITIONS

SCALE: 6" = 1' - 0"

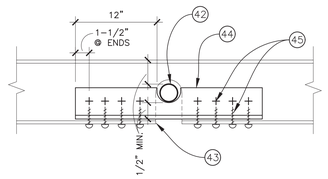

5A TRACK SPLICE AT NOTCH

NOT TO SCALE

NOTE LEGEND

1. 1-1/2" RECESS IN EXISTING 10" THICK CONCRETE FLOOR.
2. CONTINUOUS FULLY ADHERED WATERPROOF MEMBRANE.
3. REINFORCED MORTAR FILLER BED. SLOPE MIN. 1/4"PER FOOT AT SHOWER.
4. REINFORCED MORTAR BED PER TCNA B415.
5. CERAMIC TILE.
6. THINSET MORTAR PER TCNA F122, APPROX. 3/16" THICK.
7. 5" W. x 5/8" H. MARBLE THRESHOLD, BEVELED TO 5/16" H. AT EDGES.
8. LAP AND SEAL WATERPROOF MEMBRANE TO 2" W. x 3/16" H. GALVANIZED FLASHING ANGLE SET IN ADHESIVE. SET VERTICAL LEG IN LINE WITH WALL FLASHING BEYOND.
9. TROWEL-GRADE CEMENTITOUS FLOOR TOPPING, 3/16" THICK AT FACE OF THRESHOLD, TAPERING TO FEATHER-EDGE OVER 16" FOR 1 PERCENT SLOPE.
10. FACE OF DOOR FRAME AT JAMB BEYOND.
11. 1/8" THICK RESILIENT FLOORING.
12. 2" W. x 3/8" H. MARBLE THRESHOLD WITH CHAMFERED EDGES MAX. 1/4" HIGH.
13. CERAMIC TILE AT SHOWER FLOOR AND WALL PER TCNA B-415; SLOPE SURFACE TO BE 1/8" PER FOOT MINIMUM, 1/4" PER FOOT MAXIMUM.
14. CEMENTITIOUS BACKER BOARD OVER STEEL STUDS.
15. EXTEND WATERPROOF MEMBRANE FULL-HEIGHT OF TILE.
16. SHOWER RECEIVER: WATERPROOF MEMBRANE PER NOTE 2 ABOVE, WITH 1/4" PER FOOT SLOPE TO LAP LOWER DRAIN BODY FLANGE.
17. PEA GRAVEL OR OTHER WEEP PROTECTION.
18. EXTEND WATERPROOF MEMBRANE PER NOTE 2 ABOVE TO TOP OF WATERPROOF SHOWER RECEIVER MEMBRANE PER DETAIL 4, THIS SHEET.
19. SHOWER DRAIN; SEE PLUMBING DRAWINGS.
20. AT CORED OPENING IN FLOOR SLAB, GROUT SOLID AROUND DRAIN FULL DEPTH OF SLAB.
21. FLEXIBLE SEALANT JOINT.
22. EXISTING 4" WALL FRAMING AND TOP TRACK AT CEILING LINE.
23. WALL FINISH AND INSULATION PER WALL TYPE E1 - SEE SHEET A6.2.
24. 4"x20 GA INVERTED TRACK WITH 1-1/2" FLANGES; SCREW TO EXISTING TOP TRACK WITH #10 SCREWS AT 8" O.C., MIN. 2 SCREWS PER TRACK SECTION. TRACK MAY BE INTERRUPTED OR NOTCHED AT EXISTING UTILITY RISERS OR FULL-HEIGHT STUDS.
25. FULL-HEIGHT STUDS WHERE OCCUR AT MIDDLE OF WALL.
26. LEAD SHEET ABOVE CEILING - EXISTING OR REPAIRED. SHEET SHALL EXTEND DOWN TO BE SANDWICHED BETWEEN INVERTED TRACK (KEY NOTE 24) AND CEILING GRID CLOSURE ANGLE (KEY NOTE 26).
27. CEILING GRID CLOSURE ANGLE.
28. CEILING TILES.
29. EXISTING 10" THICK 4,000 PSI LIGHTWEIGHT (115 PCF) CONCRETE FLOOR SLAB.
30. CPI "SEISMIC FRAME 2-POST RACK", INCLUDING ASSUMED 1,000# CONTENTS.
31. 3/4" HILTI KB-TZ2, 4.75" MIN. EMBEDMENT, WITH STANDARD WASHER OVER 2"x2"x3/8" PLATE WASHER. TYPICAL FOR 4 LOCATIONS. HOLES IN WASHERS ARE TO BE 13/16" MAX. DIAMETER.
32. EXISTING WARDROBE CASEWORK TO BE DEMOLISHED.
33. EXISTING SOFFIT FRAMING AND FINISH AT +7'-0" TO BE DEMOLISHED. SOFFIT OCCURS ONLY ABOVE WARDROBE.
34. EXISTING SOFFIT FRAMING AND FINISH AT +8'-0" TO REMAIN..
35. EXISTING SOFFIT STUD; CUT OFF PORTION BELOW +8'-0" CEILING JOIST.
36. EXISTING TOP TRACK AT EXISTING WALL FRAMING; TOP TRACK SPANS APPROX. 4' BETWEEN FULL HEIGHT STUDS OR COLUMN.
37. EXISTING FULL-HEIGHT STUD BEYOND AT END OF SOFFIT.
38. STEEL ANGLE, 1.5"X1.5" X 20 GA., BETWEEN EXISTING STUDS., WITH #8 SCREWS AT 24" O.C. TO EXISTING FRAMING; MIN. 2 SCREWS PER PIECE OF ANGLE.
39. 4"x20 GA. CEILING JOIST WITH #8 SCREWS AT 24" O.C. TO STEEL ANGLE.
40. 5/8" GYPSUM BOARD WALL FINISH EXTENDING DOWN TO FLOOR.
41. 5/8" GYPSUM BOARD FINISH AT PATCHED SECTION OF +8'-0" SOFFIT.
42. EXISTING CONDUIT OR PIPE, WHERE OCCURS.
43. INVERTED TOP TRACK PER NOTE 24 ABOVE, WITH MINIMAL NOTCH AT CONDUIT OR PIPE.
44. TRACK SPLICE ANGLE, L2x2 x 16 GA, NESTED INTO INVERTED TRACK BELOW AT NOTCHED SIDE.
45. #10 SMS AT 3" O.C., TYPICAL FOR (4) EACH FLANGE, EACH SIDE OF NOTCH.

VENTURA COUNTY HEALTH CARE AGENCY
PUBLIC WORKS VENTURA COUNTY
ENGINEERING SERVICES

RASMUSSEN & ASSOCIATES
Architecture
Planning
Interiors
21 S. California Street
Fourth Floor
Ventura, California 93001
(805) 648-1234

PROFESSIONAL SEALS

PERMIT APPROVAL STAMP

REVIEWED IN ACCORDANCE WITH THE REQUIREMENTS OF T24, CCR
APPROVED
Department of Health Care Access and Information
FACILITIES DEVELOPMENT DIVISION
9/28/2022, 3:17:57 PM
H202495-56-00
Laura Baldrati

PERMIT NO HCAI #H202495-56-00

NO	REVISION	DATE
△		

PUBLIC WORKS PROJECT MANAGER

CONSULTANT PROJECT MANAGER: Jay Lomagno

DRAWN BY	CHECKED BY
R&A	JJL
CONSULTANT JOB NO: A000495	DATE: 06/15/2022

PROJECT TITLE AND ADDRESS

VENTURA COUNTY MEDICAL CENTER PEDIATRIC UNIT

300 HILLMONT AVE
VENTURA, CA 93003

COUNTY SPEC NUMBER: CP21-04

COUNTY PROJECT NUMBER: P6T20009

COUNTY DWG NO | SHEET 23 OF 89

SHEET TITLE: DETAILS

SHEET NO: A8.3

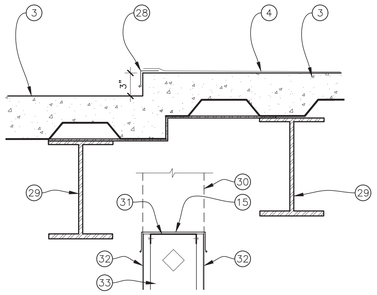

8 STEP AT DECK
SCALE 1-1/2" : 1'-0"

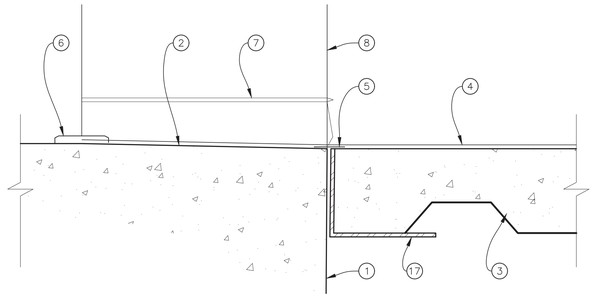

1 DECK @ EXISTING CONCRETE WALL
SCALE 3" : 1'-0"

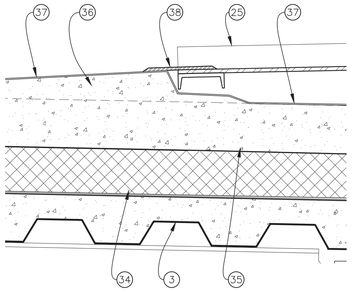

9 BRIDGE TRANSITION TO ROOF
SCALE 1-1/2" : 1'-0"

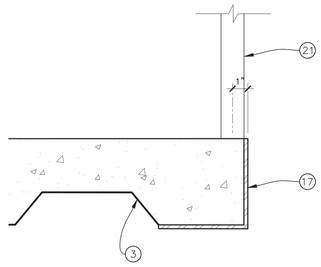

5 EDGE OF DECK
SCALE 3" : 1'-0"

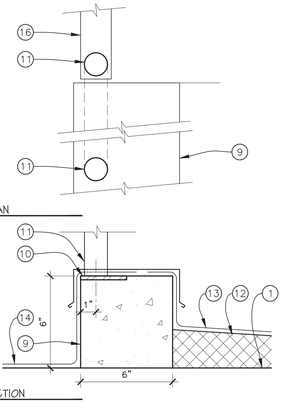

2 GUARDRAIL @ CURB
SCALE 3" : 1'-0"

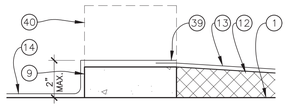

10 CURB OPENING
SCALE 3" : 1'-0"

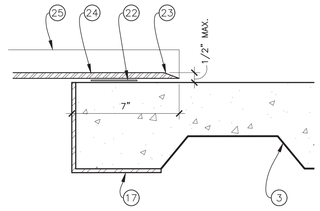

6 EDGE OF DECK @ BRIDGE
SCALE 3" : 1'-0"

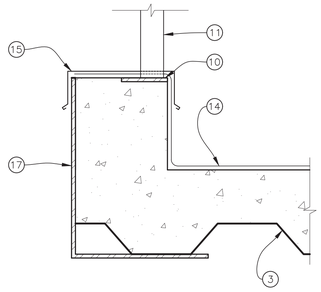

3 EDGE OF DECK W/ CURB
SCALE 3" : 1'-0"

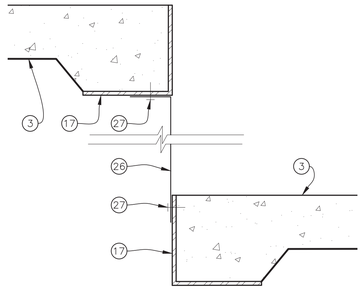

7 SHEET METAL @ DECK EDGE
SCALE 3" : 1'-0"

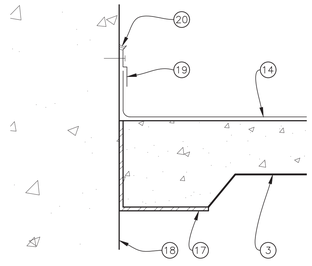

4 DECK AT CONCRETE WALL
SCALE 3" : 1'-0"

NOTE LEGEND

1 EXISTING CONCRETE STRUCTURE.
2 GRIND NEW SILL FOR POSITIVE SLOPE.
3 CONCRETE OVER METAL DECK. SEE STRUCTURAL DRAWINGS.
4 WATERPROOF DECK COATING WITH A NON-SLIP FINISH.
5 REINFORCED COATING AT CONSTRUCTION JOINT AS REQUIRED.
6 ALUMINUM THRESHOLD SET IN SEALANT.
7 FLASHING BEYOND.
8 WALL BEYOND.
9 CONCRETE CURB
10 WELD PLATE FOR HANDRAIL. SEE STRUCTURAL DRAWINGS.
11 GUARDRAIL WELDED TO PLATE/STAIR STRINGER.
12 TAPERED INSULATION AS REQUIRED.
13 BUILT-UP ROOFING. PATCH AS REQUIRED.
14 WATERPROOF DECK COATING.
15 SHEET METAL COPING.
16 2" STAIR STRINGER.
17 1/4" BENT PLATE. SEE STRUCTURAL.
18 EXISTING CONCRETE WALL
19 FLASHING.
20 SEALANT.
21 2" O.D. GUARDRAIL POST. SEE STRUCTURAL FOR ATTACHMENT.
22 1/16" NEOPRENE PAD.
23 BEVEL EDGE OF STEEL
24 TEXTURED STEEL PLATE. SEE STRUCTURAL DRAWINGS.
25 STRUCTURE BEYOND.
26 18 GA SHEET METAL ENCLOSURE SHEET METAL SHALL BE CONTINUOUS FOR WIDTH OF LIFT ENCLOSURE W/ NO VERTICAL OR HORIZONTAL JOINTS.
27 FASTENERS @ 6" O.C.
28 24 GA GALVANIZED FLASHING WITH A PAINT FINISH.
29 BEAM PER STRUCTURAL.
30 CUT DOWN EXISTING METAL FRAMED WALL AS REQUIRED.
31 NEW 16 GA TOP TRACK SCREWED TO EXISTING STUDS W/ 1 #10 S.M.S. EACH STUD EACH SIDE.
32 EXISTING METAL WALL PANELS TO REMAIN.
33 EXISTING 4" x 16 GA STUDS TO REMAIN.
34 EXISTING INSULATION.
35 EXISTING CONCRETE TOPPING.
36 NEW CONCRETE TOPPING TO ALIGN W/ STEEL STRUCTURE.
37 RUBBERIZED PLAY YARD TOPPING.
38 ALUMINUM THRESHOLD ATTACHED TO RAMP STRUCTURE.
39 LAP DECK TOPPING OVER BUILT-UP ROOFING.
40 CURB BEYOND.

VENTURA COUNTY HEALTH CARE AGENCY

PUBLIC WORKS VENTURA COUNTY

ENGINEERING SERVICES

RASMUSSEN & ASSOCIATES
Architecture
Planning
Interiors
21 S. California Street
Fourth Floor
Ventura, California 93001
(805) 648-1234

PROFESSIONAL SEALS

REGISTERED ARCHITECT JAY LOMAGNO C-20584 STATE OF CALIFORNIA

PERMIT APPROVAL STAMP

REVIEWED IN ACCORDANCE WITH THE REQUIREMENTS OF T24, CCR
APPROVED
Department of Health Care Access and Information
FACILITIES DEVELOPMENT DIVISION
9/28/2022, 3:17:57 PM
H202495-56-00
Laura Baldrati

PERMIT NO HCAI #H202495-56-00

NO	REVISION	DATE
△		

PUBLIC WORKS PROJECT MANAGER

CONSULTANT PROJECT MANAGER
Jay Lomagno

DRAWN BY	CHECKED BY
R&A	JJL
CONSULTANT JOB NO	DATE
A000495	06/15/2022

PROJECT TITLE AND ADDRESS

VENTURA COUNTY MEDICAL CENTER PEDIATRIC UNIT

300 HILLMONT AVE
VENTURA, CA 93003

COUNTY SPEC NUMBER
CP21-04

COUNTY PROJECT NUMBER
P6T20009

COUNTY DWG NO | SHEET 24 OF 89

SHEET TITLE
DETAILS

SHEET NO
A8.4

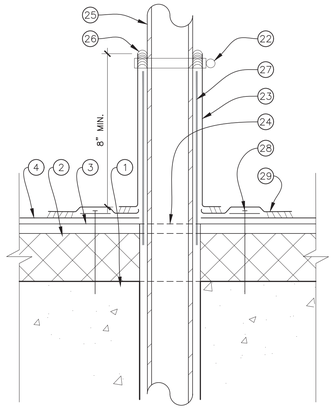

5 PIPE PENETRATION
SCALE 3" : 1'-0"

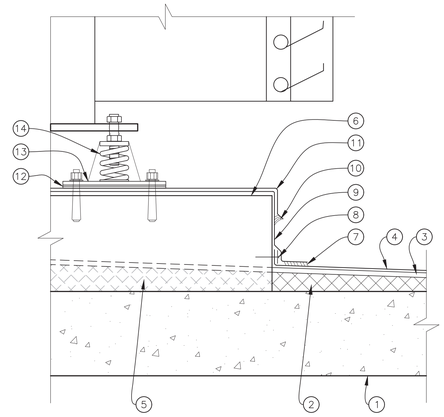

1 EQUIPMENT PAD
SCALE 1-1/2" : 1'-0"

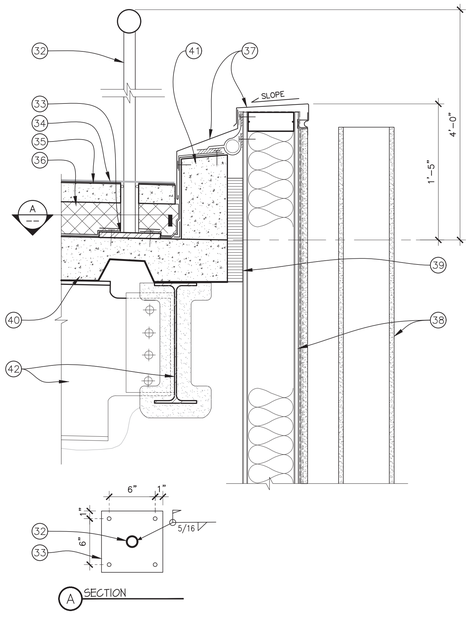

6 RAILING @ PLAYGROUND PARAPET
SCALE 1-1/2" : 1'-0"

2

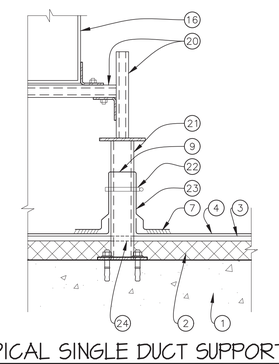

3 TYPICAL SINGLE DUCT SUPPORT
SCALE 1-1/2" : 1'-0"

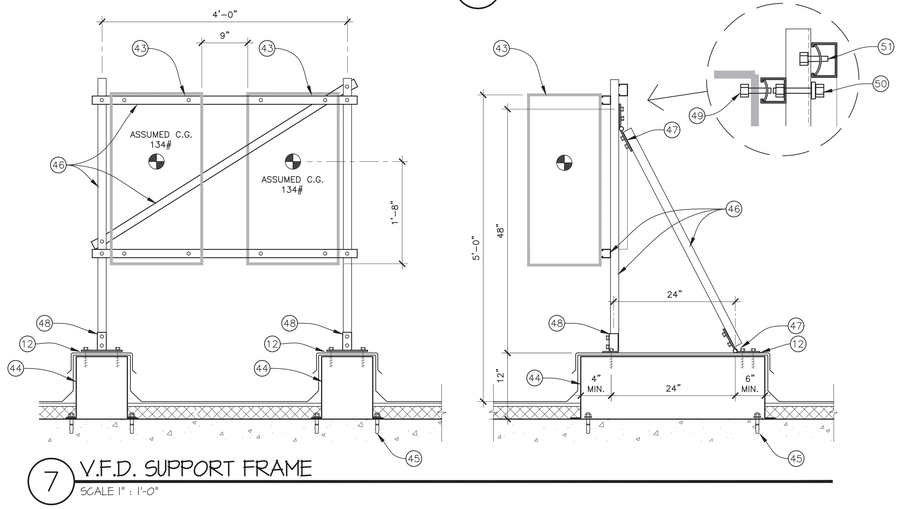

7 V.F.D. SUPPORT FRAME
SCALE 1" : 1'-0"

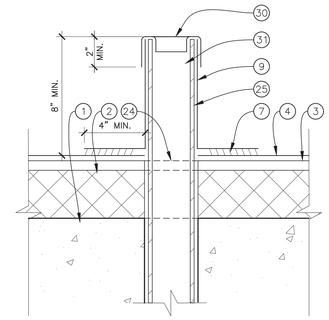

4 PLUMBING VENT FLASHING
SCALE 3" : 1'-0"

NOTE LEGEND

1 EXISTING 11" THICK CONCRETE SLAB.
2 EXISTING RIGID TAPERED ROOF INSULATION.
3 EXISTING 5/8" DENS DECK
4 EXISTING SARNAFIL MEMBRANE
5 REMOVE EXISTING INSULATION, COVER BOARD, AND ROOFING FOR INSTALLATION OF NEW EQUIPMENT PAD.
6 EQUIPMENT PAD, SEE STRUCTURAL DRAWINGS.
7 SARNAFIL FLASHING HOT-AIR WELD.
8 SARNAFIL SECUREMENT.
9 SARNAFIL FLASHING TO ACCEPTABLE SUBSTRATE.
10 SEALANT.
11 22 GA. GALVANIZED FLASHING PAN, SOLDER ALL SEAMS.
12 BED OF SEALANT.
13 ISOLATION PAD, PER MANUFACTURERS RECOMMENDATION.
14 ISOLATOR.
15 24 GA. GALVANIZED SHEET METAL FLASHING. SECURE WATER TIE TO MECHANICAL DUCT.
16 MECHANICAL DUCT.
17 HIGH DOMED, CAPPED, GASKETED FASTENERS 18" O.C.
18 EXISTING METAL DECK.
19 ANCHORAGE AND CONNECTION BY MECHANICAL.
20 (NOT USED)
21 (NOT USED)
22 STAINLESS STEEL HOSE CLAMP.
23 SARNAFIL FLASHING MEMBRANE, ADHERED.
24 REMOVE EXISTING ROOFING AND INSULATION AS REQUIRED.
25 PIPE PENETRATION.
26 SARNAFIL SEALANT.
27 ALUMINUM TAPE.
28 SARNAFASTENER AND SARNADISC.
29 SARNAFIL BASE FLASHING.
30 PVC MEMBRANE 1" DOWN INTO PIPE.
31 VENT STACK
32 2" O.D. X 0.25" PAINTED STEEL POST..
33 8" x 8" x 3/8" PLATE WITH (4) 3/8" HILITI KB TZ2 @ 6" O.C. EA. DIRECTION W/ MIN. EFF. EMBED. = 2" (ICC ES ESR-4266)
34 RUBBERIZED PLAY SURFACE TO MATCH EXISTING ADJACENT.
35 CONCRETE TOPPING.
36 MOLDED-STYRENE BOARD INSULATION.
37 EXISTING FLASHING AND ALUMINUM COPING TO REMAIN.
38 EXISTING WALL AND FINISH TO REMAIN.
39 EXISTING 2HR RATED MINERAL WOOL SAFING TO REMAIN.
40 EXISTING CONCRETE OVER METAL DECKING TO REMAIN.
41 EXISTING CONCRETE CURB TO REMAIN.
42 EXISTING ROOF STRUCTURE TO REMAIN.
43 VARIABLE FREQUENCY DRIVE CABINETS VFD-7A AND VFD-7B.
44 THYCURB TEMS-3 SUPPORT CURB, 10"x36"x12" HIGH x 12 GAUGE, WITH 2" WIDE BASE FLANGE, WOOD NAILER, AND FLASHING CAP AT TOP.
45 3/8" HILTI KB-TZ2, 2-1/2" EMBEDMENT, AT EACH CORNER OF CURB BLANGE (4 ANCHORS PER CURB).
46 B-LINE 22 STRUT AT VERTICAL POSTS, HORIZONTAL CHANNELS, AND DIAGONAL BRACE. ALL CONNECTIONS TO B-LINE FITTINGS SHALL BE WITH 1/2" BOLTS, LOCK WASHERS, AND B-LINE CHANNEL NUTS, U.N.O.
47 B-LINE B335 HINGE FITTING. AT LOWER FITTING, FASTEN TO CURB WITH (2) 1/2" DIA. x 1-1/2" LONG LAG SCREWS WITH WASHERS.
48 B-LINE B280 POST BASE, FASTEN TO CURB WITH (2) 1/2" DIA. X 1-1/2" LONG LAG SCREWS WITH WASHERS.
49 FASTEN V.F.D. TO HORIZONTAL STRUT WITH (4) 3/8" BOLTS, WASHERS, AND CHANNEL NUTS.
50 FASTEN HORIZONTAL STRUT TO VERTICAL POST WITH (4) 3/8" BOLTS, NUTS, AND WASHERS.
51 FASTEN ENDS OF DIAGONAL STRUT TO VERTICAL POST WITH 3/8" BOLTS, WASHERS, AND CHANNEL NUTS.

VENTURA COUNTY HEALTH CARE AGENCY
PUBLIC WORKS VENTURA COUNTY
ENGINEERING SERVICES

RASMUSSEN & ASSOCIATES
Architecture
Planning
Interiors
21 S. California Street
Fourth Floor
Ventura, California 93001
(805) 648-1234

PROFESSIONAL SEALS
LICENSED ARCHITECT JAY LOMAGNO C-23584 12-31-2022 STATE OF CALIFORNIA

PERMIT APPROVAL STAMP
REVIEWED IN ACCORDANCE WITH THE REQUIREMENTS OF T24, CCR
APPROVED
Department of Health Care Access and Information
FACILITIES DEVELOPMENT DIVISION
9/28/2022, 3:17:57 PM
H202495-56-00
Laura Baldrati

PERMIT NO HCAI #H202495-56-00

NO	REVISION	DATE
△		

PUBLIC WORKS PROJECT MANAGER
CONSULTANT PROJECT MANAGER Jay Lomagno
DRAWN BY R&A | CHECKED BY JJL
CONSULTANT JOB NO A000495 | DATE 06/15/2022

PROJECT TITLE AND ADDRESS

VENTURA COUNTY MEDICAL CENTER PEDIATRIC UNIT

300 HILLMONT AVE
VENTURA, CA 93003

COUNTY SPEC NUMBER CP21-04
COUNTY PROJECT NUMBER P6T20009
COUNTY DWG NO | SHEET 25 OF 89

SHEET TITLE
ROOF DETAILS

SHEET NO A8.5

NOTE: THESE DIAGRAMS ILLUSTRATE THE SPECIFIC REQUIREMENTS OF THE C.B.C. AND A.D.A. AND ARE INTENDED ONLY TO SHOW MINIMUM REQUIREMENTS. SOME CONDITIONS SHOWN MAY NOT OCCUR ON THIS PROJECT.

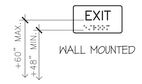

1. SIGNS SHALL BE MATTE FINISH PLASTIC, WHITE GRAPHICS ON CONTRASTING BACKGROUND.
2. WALL MOUNTED SIGN TEXT SHALL BE BETWEEN 5/8" – 2" HIGH, AND SHALL BE RAISED 1/32".
3. WALL MOUNTED SIGNS SHALL HAVE GRADE 2 BRAILLE.

9 EXIT SIGNS
NOT TO SCALE

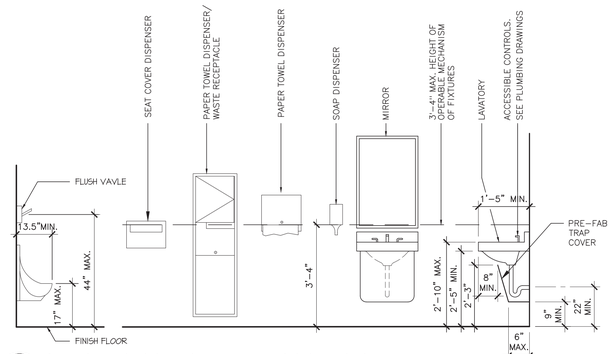

5 ACCESSIBLE RESTROOM FIXTURES
NOT TO SCALE

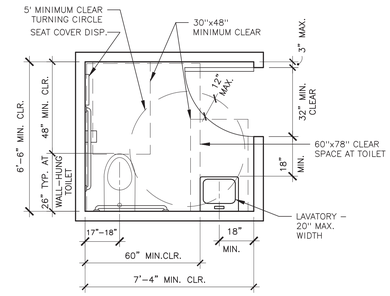

SEE DETAILS 2 AND 4 THIS SHEET FOR ADDITIONAL INFORMATION AND REQUIRED DIMENSIONS

ALL DIMENSIONS SHOWN ON THIS DETAIL ARE TO FINISH SURFACES OR FIXTURE CENTERLINES

1 SINGLE OCCUPANCY TOILET ROOM
SCALE 3/8" : 1'-0"

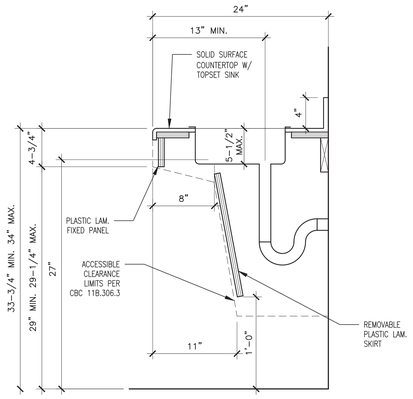

10 COUNTERTOP HANDWASH LAV
SCALE 1-1/2" : 1'-0"

1. SIGNS SHALL BE MATTE FINISH PLASTIC, WHITE GRAPHICS ON CONTRASTING BACKGROUND.
2. WALL MOUNTED SIGN TEXT SHALL BE BETWEEN 5/8" – 2" HIGH, AND SHALL BE RAISED 1/32".
3. WALL MOUNTED SIGNS SHALL HAVE GRADE 2 BRAILLE.

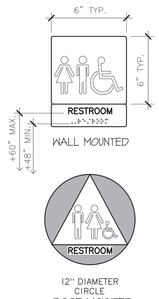

7 TOILET ROOM SIGNS
NOT TO SCALE

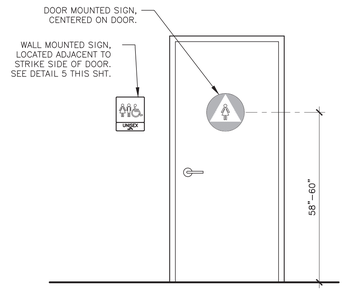

6 DOOR SIGNAGE
NOT TO SCALE

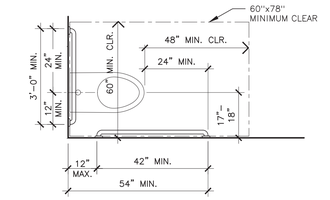

PLAN

FLUSH VALVE SHALL BE LOCATED AT WIDE SIDE OF TOILET (44" HIGH MAX)

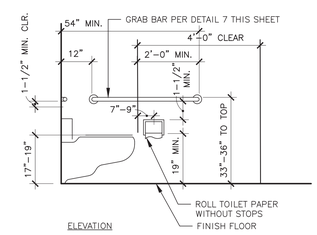

ELEVATION

2 TOILET DIMENSIONS
SCALE 1/2" : 1'-0"

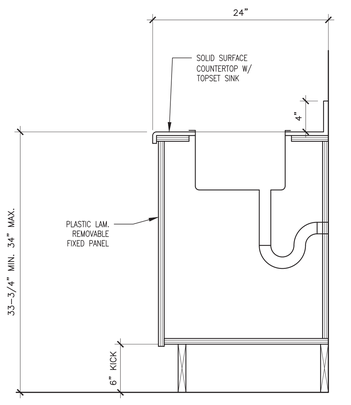

11 COUNTERTOP SINK
SCALE 1-1/2" : 1'-0"

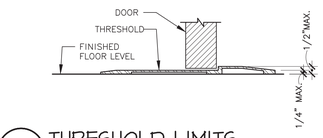

3 THRESHOLD LIMITS
NOT TO SCALE

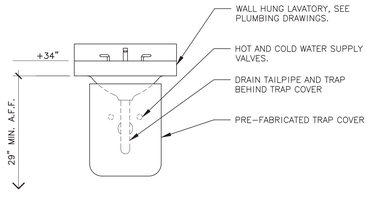

12 LAVATORY
SCALE 1" : 1'-0"

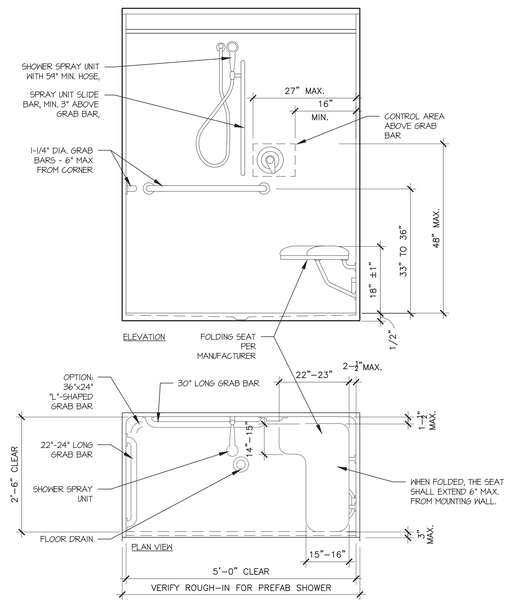

8 ACCESSIBLE SHOWER ENCLOSURE
SCALE 3/4" : 1'-0"

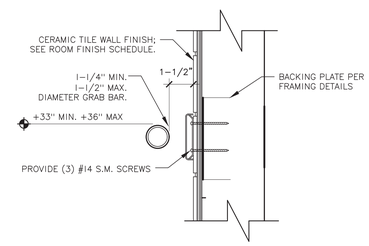

ANY WALL OR OTHER SURFACE ADJACENT TO HANDRAIL SHALL BE FREE OF ANY SHARP OR ABRASIVE ELEMENTS

BARS ARE SMOOTH WITH A MINIMUM RADIUS OF 1/8"

MINIMUM STRUCTURAL STRENGTH OF GRAB BAR(S) WILL SUPPORT A 250 lb. POINT LOAD

4 GRAB BAR ANCHOR
SCALE 3" : 1'-0"

VENTURA COUNTY HEALTH CARE AGENCY

PUBLIC WORKS VENTURA COUNTY

ENGINEERING SERVICES

RASMUSSEN & ASSOCIATES
Architecture
Planning
Interiors
21 S. California Street
Fourth Floor
Ventura, California 93001
(805) 648-1234

PROFESSIONAL SEALS

REGISTERED ARCHITECT JAY LOMAGNO C-20594 12-31-2023 STATE OF CALIFORNIA

PERMIT APPROVAL STAMP

REVIEWED IN ACCORDANCE WITH THE REQUIREMENTS OF T24, CCR
APPROVED
Department of Health Care Access and Information
FACILITIES DEVELOPMENT DIVISION
9/28/2022, 3:17:57 PM
H202495-56-00
Laura Baldrati

PERMIT NO HCAI #H202495-56-00

NO	REVISION	DATE
△		

PUBLIC WORKS PROJECT MANAGER

CONSULTANT PROJECT MANAGER
Jay Lomagno

DRAWN BY	CHECKED BY
R&A	JJL
CONSULTANT JOB NO A000495	DATE 06/15/2022

PROJECT TITLE AND ADDRESS

VENTURA COUNTY MEDICAL CENTER PEDIATRIC UNIT

300 HILLMONT AVE
VENTURA, CA 93003

COUNTY SPEC NUMBER
CP21-04

COUNTY PROJECT NUMBER
P6T20009

COUNTY DWG NO — SHEET 26 OF 89

SHEET TITLE
DETAILS

SHEET NO
A9.1

C:\Users\joe\appdata\local\temp\AcPublish_9304\A9.1.dwg Jun 16, 2022-5:24pm

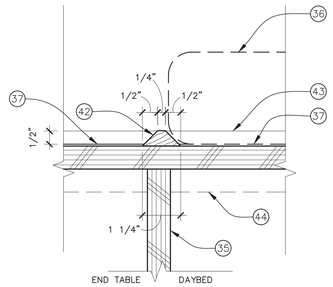

11 DAYBED - HARDWOOD TRIM
SCALE 6" : 1'-0"

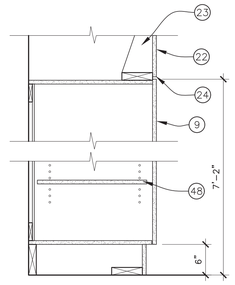

8 WARDROBE CABINET
SCALE 1" : 1'-0"

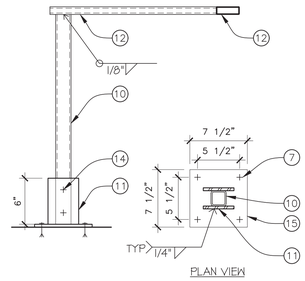

4 NURSE STN. COUNTER SUPPORT
SCALE 1-1/2" : 1'-0"

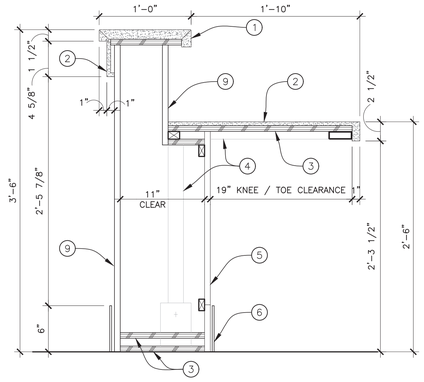

1 NURSE STATION @ 42" COUNTER
SCALE 1-1/2" : 1'-0"

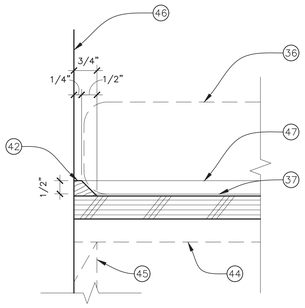

12 DAYBED - HARDWOOD TRIM
SCALE 6" : 1'-0"

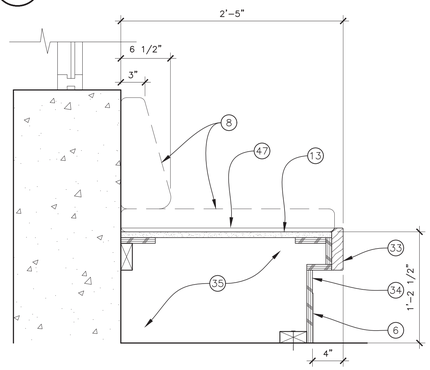

9 END TABLE AT DAYBED
SCALE 1-1/2" : 1'-0"

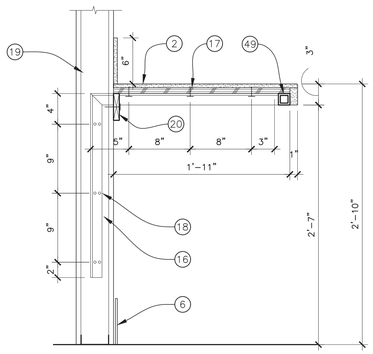

5 WALL HUNG COUNTER AT NURSE STATION
SCALE 1-1/2" : 1'-0"

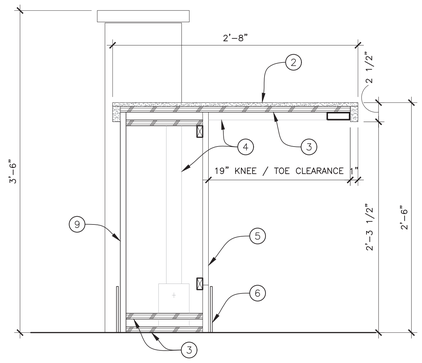

2 NURSE STATION @ 30" COUNTER
SCALE 1-1/2" : 1'-0"

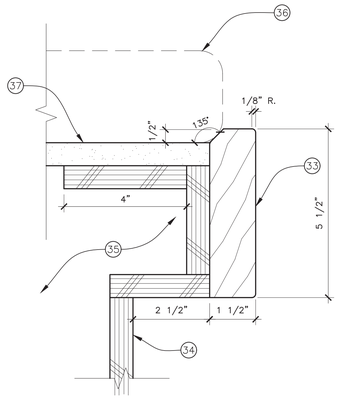

13 DAYBED - HARDWOOD FACE
SCALE 6" : 1'-0"

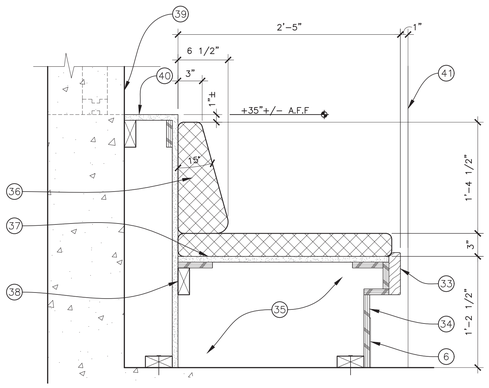

10 DAYBED - @ UPHOLSTERY
SCALE 1-1/2" : 1'-0"

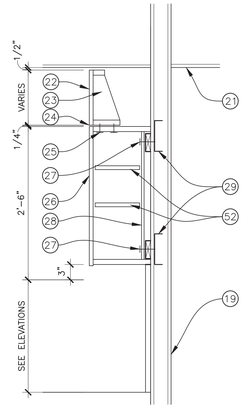

6 WALL-HUNG CABINETS
SCALE 1" : 1'-0"

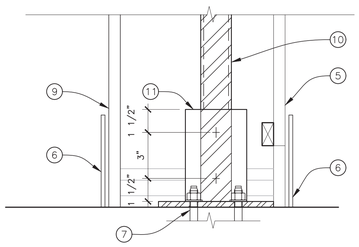

3 COUNTER SUPPORT BASE
SCALE 3" : 1'-0"

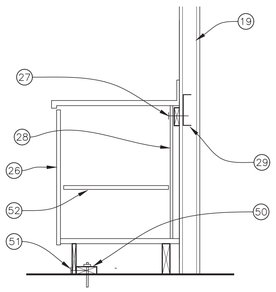

14 BASE CABINET ANCHORAGE
SCALE 1" : 1'-0"

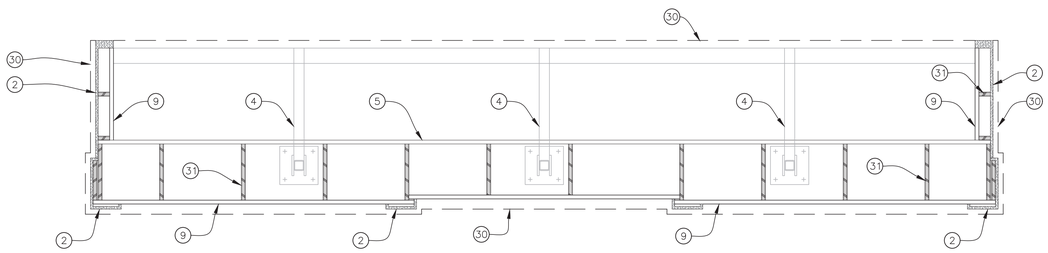

7 NURSE STATION - PLAN VIEW SECTION
SCALE 1" : 1'-0"

NOTE LEGEND

1. 1-1/4" THICK "ICESTONE"
2. 1/2" THICK CORIAN.
3. 3/4" PLYWOOD
4. STEEL TUBE SUPPORT AT 4'-0" O.C. MAX. SEE DETAIL 4, THIS SHEET.
5. PLASTIC LAMINATE REMOVABLE ACCESS PANEL
6. WALL BASE.
7. (4) 3/8" DIA. HILTI KWIK BOLT TZ2 ANCHORS WITH 2-3/4" EMBEDMENT; SEE ANCHOR NOTES ON SHEET S1.00.
8. CUSHIONS AT DAYBED BEYOND.
9. PLASTIC LAMINATE
10. HSS 2"x2"x3/16"
11. 4"x6"x3/8" STEEL PLATE AT EACH SIDE OF HSS
12. HSS 3"x1"x3/16" FLAT
13. PLASTIC LAMINATE TOP
14. (2) 5/8" DIA. A307 THRU-BOLTS
15. 7-1/2"x7-1/2"x3/8" STEEL PLATE
16. 2" x 2" x 1/4" STEEL ANGLE WELDED IN CORNER.
17. (3) 3/16" DIA. HOLES FOR ATTACHMENT OF SUBTOP WITH #8 SCREWS.
18. (6) 5/16" DIA. HOLES FOR ATTACHMENT TO STUDS WITH #14 SCREWS.
19. METAL STUD WALL, EXISTING OR NEW; SEE STUD WALL FRAMING DETAILS.
20. (2) CONTINUOUS WOOD CLEATS, ATTACH CABINET WITH MINIMUM #10 SMS AT 12" O.C. WITH PLASTIC CAPS MIN. (2) PER CAB.
21. CEILING.
22. FIXED PANEL EXTENDING TO FINISH CEILING.
23. VERTICAL BRACE @ EACH PANEL JT, AND MAX 18" O.C.
24. P-LAM FINISH & EDGE BANDING AT REVEAL & EACH PANEL JOINT.
25. ATTACH TO CABINET WITH MINIMUM (2) 10 SCREWS AT 12" O.C. WITH PLASTIC CAPS.
26. CABINET DOOR.
27. #10 SHEET METAL SCREWS AT 12" O.C., 2" FROM ENDS OF CABINET, TO BACKING TRACK MIN. (4) SCREWS PER CABINET.
28. CABINET BACK. SHIM SOLID AT ANCHORAGE POINTS.
29. 6"x16 GA. UNPUNCHED TRACK, CONTINUOUS TO STUD BEYOND CABINET. SEE STUD WALL FRAMING DETAILS.
30. COUNTER ABOVE
31. 3/4" PLYWOOD INTERMEDIATE VERTICAL BLOCKING AT APPROX. 12" O.C., WITH CUTOUTS FOR ELECTRICAL TO PASS THROUGH, TYPICAL.
32. EXISTING CONCRETE COLUMN.
33. 1-1/2" X 5-1/2" HARDWOOD TRIM. SEE DETAIL 13, THIS SHEET.
34. REMOVABLE 3/4" MDF PAINTED PANEL TO MATCH WALL.
35. 3/4" PLYWOOD GUSSETS AT 16" O.C.
36. UPHOLSTERED CUSHION
37. PLASTIC LAMINATE SURFACE FOR DAYBED.
38. WHERE DAYBED BACKS UP TO CONCRETE WALL, ANCHOR LEDGER TO WALL WITH SHOT PINS AT 32" O.C.
39. WINDOW SILL AND/OR CONCRETE WALL (TIGHT TO BACK OF DAYBED WHERE OCCURS.)
40. PLASTIC LAMINATE SHELF AND BACK WHERE OCCURS – ALIGN TOP WITH WINDOW SILL.
41. FACE OF WARDROBE CABINET BEYOND.
42. HARDWOOD TRIM EDGE
43. HARDWOOD TRIM BEYOND PER DETAIL 12, THIS SHEET.
44. CONTINUOUS LEDGER BEYOND.
45. BLOCKING AS REQUIRED.
46. WALL OR CASEWORK AT ENDS AND BACK OF DAYBED BASE AND END TABLE.
47. HARDWOOD TRIM BEYOND PER DETAIL 11, THIS SHEET.
48. ADJUSTABLE SHELVES; THREE PER WARDROBE CABINET.
49. 1-1/2" SQ. x 1/4" STEEL TUBE, WELDED TO END OF STEEL ANGLE. LOCATE STEEL TUBE TIGHT TO BACK SIDE OF COUNTER EDGE.
50. 2x4 x 12" LONG PRESSURE-TREATED PLATE, LOCATED AT EACH FRONT CORNER OF CABINET AND AT 36" MAX. O.C., WITH ONE 3/8" KB-TZ2 ANCHOR, 2" MIN. EMBEDMENT. SEE POST-INSTALLED ANCHOR NOTES, SHEET S1.00.
51. THREE #8 WOOD SCREWS IN PRE-DRILLED HOLES. TYPICAL AT EACH 12" LONG SECTION OF 2x4.
52. ADJUSTABLE SHELVES: TWO AT UPPER CABINETS, ONE AT BASE CABINET WHERE DOORS OCCUR.

VENTURA COUNTY HEALTH CARE AGENCY

PUBLIC WORKS VENTURA COUNTY

ENGINEERING SERVICES

RASMUSSEN & ASSOCIATES
Architecture
Planning
Interiors
21 S. California Street
Fourth Floor
Ventura, California 93001
(805) 648-1234

PROFESSIONAL SEALS

PERMIT APPROVAL STAMP

REVIEWED IN ACCORDANCE WITH THE REQUIREMENTS OF T24, CCR
APPROVED
Department of Health Care Access and Information
FACILITIES DEVELOPMENT DIVISION
9/28/2022, 3:17:57 PM
H202495-56-00
Laura Baldrati

PERMIT NO HCAI #H202495-56-00

NO	REVISION	DATE
△		

PUBLIC WORKS PROJECT MANAGER

CONSULTANT PROJECT MANAGER
Jay Lomagno

DRAWN BY	CHECKED BY
R&A	JJL
CONSULTANT JOB NO A000495	DATE 06/15/2022

PROJECT TITLE AND ADDRESS

VENTURA COUNTY MEDICAL CENTER PEDIATRIC UNIT

300 HILLMONT AVE
VENTURA, CA 93003

COUNTY SPEC NUMBER
CP21-04

COUNTY PROJECT NUMBER
P6T20009

COUNTY DWG NO | SHEET 27 OF 89

SHEET TITLE
DETAILS

SHEET NO
A9.2

010000 - GENERAL REQUIREMENTS

1. PROJECT SYNOPSIS - NEW PEDESTRIAN BRIDGE AT THE SECOND LEVEL AND NEW MECHANICAL EQUIPMENTS AT THE ROOF LEVEL OF THE (E) FAINER BUILDING.
2. CONSTRUCTION, QUALITY AND MATERIALS SHALL COMPLY WITH THE 2019 CALIFORNIA BUILDING CODE, PART 1 AND PART 2 VOL 1 AND 2.
3. IT IS THE CONTRACTOR'S RESPONSIBILITY TO VERIFY ALL DIMENSIONS, PROJECT BOUNDARIES AND EXISTING CONDITIONS AT THE SITE PRIOR TO COMMENCEMENT OF WORK. THE CONTRACTOR SHALL CROSS-CHECK DETAILS AND DIMENSIONS SHOWN ON THE STRUCTURAL DRAWINGS WITH RELATED REQUIREMENTS ON OTHER CONSTRUCTION DOCUMENTS.
4. THE CONTRACTOR SHALL IMMEDIATELY NOTIFY THE STRUCTURAL ENGINEER OF RECORD (SEOR) OF ANY CONFLICTS BETWEEN THE STRUCTURAL DRAWINGS AND OTHER CONSTRUCTION DOCUMENTS OR EXISTING CONDITIONS. THE

   CONTRACTOR SHALL NOT ORDER MATERIAL, FABRICATE ELEMENTS, OR CONSTRUCT ANY PORTION OF STRUCTURE THAT IS IN CONFLICT UNTIL RESOLUTION IS MADE.
5. WHEN DIMENSIONS ARE UNCLEAR, REQUEST CLARIFICATION FROM THE SEOR AND ARCHITECT. DO NOT SCALE DRAWINGS. UNLESS NOTED OTHERWISE, PLAN DIMENSIONS INDICATE CENTERLINE OF BEAMS AND COLUMNS, LIGHT-FRAMED WALLS ARE DIMENSIONED TO FACE OF STUDS, AND FOOTINGS ARE CENTERED UNDER THE ELEMENTS THEY SUPPORT.
6. WHERE INFORMATION IS CONFLICTING WITHIN THE STRUCTURAL DOCUMENTS, SPECIFIC DETAILS SHALL GOVERN OVER TYPICAL DETAILS, WHICH HAVE PRECEDENCE OVER THESE NOTES, WHICH IN TURN OVERRULE PROJECT SPECIFICATIONS.
7. DETAILS NOTED AS TYPICAL ON STRUCTURAL SHEETS SHALL APPLY IN ALL CASES UNLESS SPECIFICALLY SHOWN OR NOTED OTHERWISE. WHERE NO DETAIL IS INDICATED, CONSTRUCTION SHALL BE OF THE SAME NATURE AS FOR SIMILAR CASES OF CONSTRUCTION ON THIS PROJECT.
8. THE ARCHITECT AND SEOR SHALL INTERPRET THE CONSTRUCTION DOCUMENTS IN CASE OF POSSIBLE CONFLICT OR DISCREPANCY BETWEEN STRUCTURAL AND OTHER DISCIPLINES.
9. THE CONTRACTOR SHALL PROVIDE ALL NEW (N) MATERIALS TO PERFORM THE WORK INDICATED ON STRUCTURAL DOCUMENTS UNLESS NOTED AS EXISTING (E) OR SUPPLIED BY OTHERS. WRITTEN APPROVAL FROM THE SEOR SHALL BE OBTAINED PRIOR TO THE SUBSTITUTION OF ANY MATERIAL OR PRODUCT SPECIFIED ON THE STRUCTURAL DOCUMENTS.
10. STRUCTURAL CONSTRUCTION DOCUMENTS REPRESENT THE FINISHED STRUCTURE, UNLESS OTHERWISE SHOWN THEY DO NOT INDICATE THE METHOD OF CONSTRUCTION OR NECESSARY COMPONENTS FOR CONSTRUCTION SAFETY. THE CONTRACTOR IS SOLELY RESPONSIBLE FOR THE DESIGN OF TEMPORARY ERECTION AIDS, FORMWORK, SCAFFOLDING, SAFETY MEASURES, SHORING OF ANY PORTION OF WORK, AND PROTECTION OF ADJACENT PROPERTIES. THE CONTRACTOR SHALL SUPERVISE AND DIRECT THE WORK AND SHALL BE RESPONSIBLE FOR ALL CONSTRUCTION MEANS, METHODS, TECHNIQUES, SEQUENCES AND PROCEDURES. VISITS TO THE SITE BY THE SEOR SHALL NOT INCLUDE OBSERVATION OR INSPECTION OF THE ABOVE ITEMS AND DO NOT IN ANY WAY RELIEVE THE CONTRACTOR OF HIS RESPONSIBILITIES FOR THE ABOVE.
11. IT IS THE CONTRACTOR'S RESPONSIBILITY TO COMPLY WITH THE PERTINENT SECTIONS OF THE "CONSTRUCTION SAFETY ORDERS" ISSUED BY THE STATE OF CALIFORNIA, LATEST EDITION, AND ALL OSHA REQUIREMENTS AS THEY APPLY TO THIS PROJECT. THE SEOR AND THE OWNER DO NOT ACCEPT ANY RESPONSIBILITY FOR THE CONTRACTOR'S FAILURE TO COMPLY WITH THESE.
12. ALL STRUCTURAL FRAMING SHALL BE ERECTED PLUMB AND TRUE TO LINE. TEMPORARY BRACING SHALL BE INSTALLED AND LEFT IN PLACE UNTIL ADEQUATE STRUCTURE IS CONSTRUCTED FOR STABILITY.
13. CONSTRUCTION MATERIALS AND ERECTION LOADS SHALL BE DISTRIBUTED WHEN PLACED ON THE STRUCTURE SUCH THAT THEY DO NOT EXCEED DESIGN LIVE LOADS OR RESULT IN AN UNBALANCED CONDITION. MAXIMUM PERMANENT EQUIPMENT WEIGHTS, POSTED LOAD LIMITS OR OTHER RESTRICTIONS NOTED ON THE STRUCTURAL DRAWINGS SHALL NOT BE EXCEEDED WITHOUT PRIOR WRITTEN APPROVAL BY THE SEOR. UNLESS SPECIFICALLY STATED, THE STRUCTURE IS NOT DESIGNED TO SUPPORT TRAFFIC FROM CRANES OR OTHER HEAVY CONSTRUCTION VEHICLES.
14. FLOOR, ROOF AND WALL OPENINGS, SLEEVES, INSERTS, EMBEDS, CONDUITS AND OTHER DISCIPLINE REQUIREMENTS MUST BE COORDINATED BEFORE THE CONTRACTOR PROCEEDS WITH CONSTRUCTION. THE EXACT DEPTH, EXTENT, AND LOCATION OF ALL FLOOR OR ROOF DEPRESSIONS, SLOPES, CURBS, PADS, TRENCHES, DRAINS AND OTHER FEATURES SHALL BE COORDINATED WITH THE CONSTRUCTION DOCUMENTS. THE STRUCTURAL DRAWINGS DO NOT NECESSARILY INDICATE ALL OF THESE ITEMS.
15. CORE DRILLING OF CONCRETE OR MASONRY IS NOT PERMITTED WITHOUT PRIOR APPROVAL BY THE SEOR. CORES, WHERE APPROVED SHALL NOT CUT REINFORCEMENT. THE CONTRACTOR SHALL PRESENT ALL CORES TO THE INSPECTOR OF RECORD (IOR) FOR VERIFICATION.
16. STRUCTURAL DRAWINGS INDICATE THE APPROXIMATE LOCATION OF EQUIPMENT AND THEIR SECONDARY FRAMING SUPPORTS. THE CONTRACTOR SHALL BE RESPONSIBLE FOR COORDINATING WORK BETWEEN SUBCONTRACTORS AND CRAFTS IN ORDER TO PROVIDE NECESSARY DIMENSIONS IN A TIMELY MANNER TO ALL PARTIES AND DETAILERS INVOLVED.
17. PROVIDE A SHIM SPACE AT HEADERS AND JAMBS TO ALLOW FOR SETTLEMENT AND MOVEMENT OF FRAMING. INSTALL WINDOWS, DOORS AND OTHER INSET ITEMS IN WALLS AFTER BUILDING LOADS ARE FULLY APPLIED.
18. EXPANSION AND SEPARATION JOINT DIMENSIONS SHOWN INDICATE THE CLEAR DISTANCE REQUIRED. COMPONENTS COVERING OR CROSSING SUCH JOINTS MUST ACCOMMODATE THE JOINT FULLY CLOSING OR OPENING TO TWICE THE DIMENSION SHOWN, AS WELL AS RELATIVE LATERAL MOVEMENT ALONG THE JOINT. ALL PIPES, DUCTS, CONDUIT, ETC., CROSSING SUCH JOINTS SHALL HAVE FLEXIBLE LINES WITH ADEQUATE RANGE OF MOTION.

STRUCTURAL DESIGN CRITERIA

CODES: DESIGN IS BASED ON THE 2019 CALIFORNIA BUILDING CODE

LIVE LOADS (REDUCIBLE, UNO):
ROOF, UNIFORM....20 PSF
STAIR/PEDESTRIAN BRIDGE....100 PSF
RISK CATEGORY....IV

WIND LOAD:
EXPOSURE....C
ULTIMATE DESIGN WIDE SPEED, Vult....104 MPH
INTERNAL PRESSURE COEFFICIENT, G Cpi....± 0.18

EARTHQUAKE LOADS:
RISK CATEGORY....IV
SEISMIC IMPORTANCE FACTOR, Ie....1.5
SITE CLASSIFICATION....D
SPECTRAL ACCEL PARAMETERS (USGS '08)....Ss = 1.993, S1 = 0.75
DESIGN SPECTRAL ACCEL PARAMETERS....Sds = 1.594, Sd1 = 0.85
SEISMIC DESIGN CATEGORY....D
SEISMIC FORCE RESISTING SYSTEM(S):

013200 - STRUCTURAL OBSERVATIONS

1. VISUAL OBSERVATIONS WILL BE PERFORMED AT THE DISCRETION OF THE OWNER, ARCHITECT, SEOR, AND AS REQUIRED BY THE BUILDING OFFICIAL IN ACCORDANCE WITH THE BUILDING CODE. VISUAL OBSERVATIONS SHALL NOT BE CONSIDERED AS A SUBSTITUTE FOR THE SPECIAL INSPECTION REQUIREMENTS.
2. IT IS THE RESPONSIBILITY OF THE GENERAL CONTRACTOR TO NOTIFY THE SEOR AS TO WHEN EACH MAJOR PHASE OF CONSTRUCTION WILL BE READY FOR OBSERVATION A MINIMUM OF FIVE (5) WORKING DAYS IN ADVANCE.
3. THE CONTRACTOR SHALL BE RESPONSIBLE FOR ENSURING THAT ITEMS LISTED IN THE SCHEDULE ARE VISIBLE FOR OBSERVATION WHEN THE SEOR IS ON SITE AND FOR ANY SCHEDULING DELAYS DUE TO NONCOMPLIANT ITEMS FOUND DURING THE OBSERVATION.
4. AT THE CONCLUSION OF THE WORK INCLUDED IN THE PERMIT, THE STRUCTURAL OBSERVER SHALL SUBMIT TO THE BUILDING OFFICIAL A WRITTEN STATEMENT THAT THE SITE VISITS HAVE BEEN MADE AND IDENTIFY ANY REPORTED DEFICIENCIES THAT, TO THE BEST OF THE STRUCTURAL OBSERVERS KNOWLEDGE, HAVE NOT BEEN RESOLVED.

STRUCTURAL OBSERVATION SCHEDULE

WHEN
AFTER EXPOSURE OF EXISTING STRUCTURE AT THE BRIDGE
AFTER STEEL ERECTION OF BRIDGE STEEL
AFTER DECK INSTALLATION
NEW SAWCUT OPENINGS IN CONCRETE SLAB AND WALL, BEFORE CONCEALING
PLACEMENT OF DOWELS AND REINFORCING BEFORE CONCRETE PLACEMENT

016000 - PRODUCT SPECIFICATION

1. THE STRUCTURAL PRODUCT SCHEDULE INDICATES BASIS-OF-DESIGN MANUFACTURERS AND PRODUCTS FOR USE ON THIS PROJECT. WHERE STRUCTURAL PRODUCTS ARE NOT EXPLICITLY NAMED IN THE CONSTRUCTION DOCUMENTS, PROVIDE A LISTED PRODUCT.
2. PRODUCTS SHALL BE INSTALLED PER THE MANUFACTURER'S INSTALLATION INSTRUCTIONS AS AMENDED BY THE REFERENCED PRODUCT ACCEPTANCE REPORTS (ICC, IAPMO, ETC.) FOR THE INTENDED USE.
3. AT CONTRACTOR'S OPTION, SUBSTITUTION REQUESTS MAY BE MADE FOR LIKE PRODUCTS WHICH DEMONSTRATE QUALITIES THAT EQUAL OR EXCEED THOSE OF SPECIFIED PRODUCTS.

STRUCTURAL PRODUCT SCHEDULE

TYPE	PRODUCT	ICC / IAPMO	LARR
EXPANSION ANCHOR TO CONCRETE	HILTI KWIK BOLT TZ2	ESR-4266	-
	DEWALT/POWERS-STUD+ SD2	ESR-2502	25831
	SIMPSON STRONG-BOLT 2	ESR-3037	25891
ADHESIVE ANCHOR TO CONCRETE	HILTI HIT-HY 200	ESR-3187	25964
	HILTI HIT-RE 500-V3	ESR-3814	26028
	DEWALT/POWERS AC200+	ESR-4027	-
	DEWALT/POWERS PURE110+	ESR-3298	26035
	SIMPSON AT-XP	ER-0263	25960
	SIMPSON SET-XP	ESR-2508	25744
SCREW ANCHOR TO CONCRETE (≥ 1/4" DIAM)	HILTI KWIK HUS-EZ, -EZ 1	ESR-3027	25897
	SIMPSON TITEN HD	ESR-2713	25741
	DEWALT/POWERS WEDGE-BOLT+	ESR-2526	25808
SCREW ANCHOR TO CONCRETE (≤ 3/16" DIAM)	ITW RED HEAD TAPCON	ESR-2202	25975
SHOTPIN	HILTI LOW-VELOCITY X-U	ESR-2269	25675
	ITW RAMSET POWER-DRIVEN	ESR-1799	22668
	SIMPSON POWDER-ACTUATED	ESR-2138	25469
EXPANSION ANCHOR TO GROUTED CMU	HILTI KWIK BOLT 3	ESR-1385	25577M
	DEWALT/POWERS STUD+ SD1	ESR-2818	25864
	DEWALT/POWERS STUD+ SD4, SD6	ESR-2502	25831
	SIMPSON STRONG-BOLT 2	ER-0240	25936
ADHEVISE ANCHOR TO GROUTED CMU	HILTI HIT-HY 270	ESR-4143	SEE ESR
	DEWALT/POWERS AC100+ GOLD	ESR-3200	26049
	SIMPSON AT-XP	ER-0281	25966
SCREW ANCHOR TO GROUTED CMU (≥ 1/4" DIAM)	HILTI KWIK HUS-EZ	ESR-3056	25979
	SIMPSON TITEN HD	ESR-1056	25560

017000 - EXISTING CONDITIONS

1. SEE ORIGINAL DRAWINGS FOR EXISTING BUILDING INFORMATION NOT SHOWN OR NOTED.
2. SEE PROJECT REPORTS AND ARCHITECTURAL DRAWINGS FOR HAZARDOUS MATERIALS (LEAD, ASBESTOS, ETC.) ABATEMENT REQUIREMENTS.
3. WHERE EXISTING CONDITIONS VARY SIGNIFICANTLY FROM THOSE SHOWN ON THESE DRAWINGS, THE SEOR SHALL BE NOTIFIED PRIOR TO CONTINUED CONSTRUCTION RELATED TO SUBJECT CONDITIONS.
4. EXISTING CONCRETE SURFACES TO BE IN CONTACT WITH NEW CONCRETE SHALL BE ROUGHENED AS FOR TYPICAL CONSTRUCTION JOINTS, AND AN ASTM C1059 COMPLIANT BONDING AGENT SHALL BE APPLIED PRIOR TO PLACING NEW CONCRETE.
5. DO NOT CUT OR DAMAGE EXISTING CONCRETE OR MASONRY REINFORCEMENT EXCEPT AS CLEARLY INDICATED. MAINTAIN AT LEAST 2 INCHES CLEAR TO EXISTING REINFORCEMENT, CONDUIT AND OTHER EMBEDDED ITEMS FROM CUTS, CORES, DRILL HOLES, SHOTPINS, ETC. IN AREAS OF WORK, MARK LOCATIONS OF SUCH ITEMS USING NONDESTRUCTIVE METHODS SUCH AS GROUND PENETRATING RADAR OR X-RAY.
6. THE GENERAL CONTRACTOR SHALL COORDINATE THE SPECIFIC LOCATION OF REPLACEMENT MECHANICAL EQUIPMENT WITH THE STRUCTURAL FRAMING. IF NEW EQUIPMENT DEVIATES IN WEIGHT, SIZE OR LOCATION FROM EXISTING EQUIPMENT BEING REPLACED, SEOR APPROVAL MUST BE OBTAINED PRIOR TO INSTALLATION OF THE UNITS.
7. EXISTING STRUCTURAL MEMBERS SUPPORTING NEW EQUIPMENT SHALL BE INSPECTED FOR DAMAGE AND DETERIORATION PRIOR TO INSTALLATION OF THE UNITS. NOTIFY THE SEOR OF SUCH CONDITIONS AND DO NOT INSTALL UNITS UNTIL THE CONDITIONS ARE ADDRESSED.
8. DURING THE COURSE OF WORK, NOTIFY THE SEOR OF EXISTING STRUCTURAL DETERIORATION, APPARENT DISTRESS, WATER INTRUSION, OR COMPROMISED MEMBERS THAT ARE DISCOVERED.
9. REPAIR FIREPROOFING, WATERPROOFING AND FINISHES AS REQUIRED WHERE DISTURBED BY STRUCTURAL WORK. SEE ARCHITECTURAL DRAWINGS AND SPECIFICATIONS.
10. EXISTING WOOD MEMBER SIZES MAY BE FULL-SIZE OR NONSTANDARD RELATIVE TO CURRENT PRACTICE. PROVIDE FULL-SIZE CURED, OR CUT NEW STRUCTURAL WOOD TO MATCH WHERE INDICATED. DO NOT FUR OUT TO MAKE UP GAPS BETWEEN NEW STRUCTURAL MEMBERS OR SHEATHING UNLESS SPECIFICALLY DETAILED OR NOTED.

032000 - REINFORCING STEEL

1. PLACING TOLERANCES AND BAR SUPPORTS SHALL CONFORM TO THE "MANUAL OF STANDARD PRACTICE" FOR REINFORCED CONCRETE CONSTRUCTION, BY CONCRETE REINFORCING STEEL INSTITUTE (CRSI).
2. ALL REINFORCING BAR (REBAR) STEEL SHALL BE DEFORMED ROUND BARS CONFORMING TO ASTM A615 OR ASTM A706, GRADE 60.
3. WELDED WIRE FABRIC (WWF) SHALL CONFORM TO ASTM A1064. ADJACENT WWF SHEETS SHALL BE LAPPED 12 INCHES MINIMUM.
4. PROVIDE ALL ACCESSORIES NECESSARY TO SUPPORT REINFORCING IN POSITIONS INDICATED. CHAIRS OR BOLSTERS WHICH BEAR AGAINST FORMS FOR EXPOSED SURFACES SHALL BE GREY COLORED PLASTIC COATED STEEL OR STAINLESS STEEL.
5. REINFORCING BARS SHALL BE KEPT CLEAN AND FREE OF OIL, GREASE AND LOOSE RUST OR MILL SCALE.
6. BEND REINFORCING BARS COLD. BARS PARTIALLY EMBEDDED IN CONCRETE SHALL NOT BE FIELD BENT.
7. ALL REINFORCING SHALL BE CONTINUOUS UNLESS NOTED OTHERWISE, WITH CONTACT LAP SPLICES PER THE TYPICAL DETAILS OR AS SHOWN.
8. PROVISION FOR LAP SPLICES OR DOWELS SHALL BE PROVIDED ACROSS ALL CONSTRUCTION JOINTS AND SHALL BE THE SAME GRADE, SIZE AND SPACING AS REINFORCING CONTINUING BEYOND UNLESS NOTED OTHERWISE. IN LIEU OF SPLICES OR DOWELS, THE CONTRACTOR MAY SUBMIT FOR SEOR APPROVAL THE LOCATION AND MANUFACTURER DATA OF FORMSAVERS OR COUPLERS PRIOR TO THEIR USE.
9. ALL BENDS WITHIN HOOKS, STIRRUPS, HOOPS AND CROSS-TIES SHALL ENGAGE A LONGITUDINAL BAR, PROVIDE A #5 CONTINUOUS BAR WHERE ONE IS NOT SPECIFICALLY DETAILED.
10. CLEARANCE BETWEEN PARALLEL BARS, OR BARS AND CONSTRUCTION JOINTS SHALL BE NOT LESS THAN THE SMALLER OF 1 INCH, 1 BAR DIAMETER, OR THE MAXIMUM AGGREGATE SIZE. UNLESS NOTED OTHERWISE, BARS IN PARALLEL LAYERS SHALL BE PLACED IN ALIGNMENT WITH ONE ANOTHER.
11. MAINTAIN A MINIMUM COVER FROM FACE OF CONCRETE TO EDGE OF REINFORCEMENT PER THE MINIMUM CONCRETE COVER OF REINFORCEMENT SCHEDULE OR AS DETAILED. PROVIDE THE LARGEST COVER REQUIRED FOR ALL APPLICABLE CONDITIONS AND BAR SIZES. WHERE #3 STIRRUPS OR TIES ARE USED, ENSURE THAT THE COVER FOR LONGITUDINAL BARS IS ADEQUATE.
12. THE FOLLOWING REINFORCEMENT SHALL CONFORM TO ASTM A706:
    a. REINFORCEMENT TO BE WELDED.
    b. LONGITUDINAL COLUMN AND BEAM REINFORCEMENT IN DESIGNATED MOMENT FRAMES.
    c. VERTICAL REINFORCEMENT AT INTERSECTIONS AND ENDS OF DESIGNATED CONCRETE SHEAR WALLS ENCLOSED IN TIES.

032000 - REINFORCING STEEL (CONTINUED)

MINIMUM CONCRETE COVER OF REINFORCEMENT SCHEDULE

CONDITION	MIN.COVER
INTERIOR RAISED SLABS AND INTERIOR WALL FACES	1"
INTERIOR COLUMNS AND BEAMS	1 1/2"
OTHER INTERIOR CONCRETE, #11 BARS AND SMALLER	3/4"
FORMED AND EXPOSED TO SOIL OR WEATHER, #6 BARS AND LARGER: #5 BARS AND SMALLER:	2" 1 1/2"
CAST AGAINST AND PERMANENTLY EXPOSED TO SOIL	3"
STRUCTURAL SLAB-ON-GRADE, FROM BOTTOM OF SLAB: FROM TOP OF SLAB:	2" 1 1/2"
CLEARANCE FROM METAL DECK	3/4" CLR

033000 - STRUCTURAL CONCRETE

1. CONCRETE SHALL BE MIXED, PLACED AND CURED IN ACCORDANCE WITH ACI 318 AND ACI 301 LATEST EDITION AND THE CONSTRUCTION DOCUMENTS.
2. CONCRETE MIXING OPERATIONS SHALL CONFORM TO ASTM C94. QUANTITIES OF MATERIALS SHALL BE CERTIFIED BY A LICENSED WEIGHT-MASTER.
3. RETAIN AN APPROVED TESTING LABORATORY, ACCEPTABLE TO THE OWNER, TO PREPARE CONCRETE MIX DESIGNS ACCORDING TO GOVERNING CODE AND THE CONSTRUCTION DOCUMENTS. ALL CONCRETE MIXES SHALL BE STAMPED AND SEALED BY A LICENSED CALIFORNIA CIVIL ENGINEER AND SUBMITTED TO THE SEOR FOR REVIEW PRIOR TO CONCRETE PLACEMENT. NEW MIX DESIGNS ARE REQUIRED WHEN THERE IS A CHANGE IN MATERIALS BEING USED. MIX DESIGNS SHALL CLEARLY STATE THE INTENDED LOCATION FOR USE.
4. CONCRETE SHALL ATTAIN A MINIMUM COMPRESSIVE STRENGTH AT 28 DAYS AS INDICATED ON THE CONCRETE SCHEDULE. ALL CONCRETE TEST REPORTS SHALL BE SUBMITTED TO THE SEOR WITHIN 7 DAYS AFTER TESTING.
5. AGGREGATE SHALL BE HARDROCK FOR NORMAL WEIGHT CONCRETE (NWC) CONFORMING TO ASTM C33. THE UNIT WEIGHT OF NWC SHALL HAVE AN AIR-DRY EQUILIBRIUM DENSITY OF 145 ± 5 PCF. THE UNIT WEIGHT OF NWC SHALL BE CONFIRMED BY THE MIX DESIGN AND DOES NOT REQUIRE TESTING UNO.
6. AGGREGATE FOR SAND LIGHT WEIGHT CONCRETE (LWC) SHALL CONFORM TO ASTM C330. UNIT WEIGHT OF LWC SHALL NOT EXCEED 115 PCF MEASURED AIR-DRY EQUILIBRIUM DENSITY PER ASTM C567, OR 110 PCF MEASURED OVEN-DRY. THE UNIT WEIGHT OF LWC SHALL BE LAB TESTED FOR EACH MIX DESIGN AND AGGREGATE SOURCE.
7. COARSE AGGREGATE WITH A MAXIMUM SIZE OF 1/2 INCH OR LESS SHALL BE CRUSHED STONE.
8. PORTLAND CEMENT TYPE SHALL BE AS SPECIFIED IN THE CONCRETE SCHEDULE AND CONFORM TO ASTM C150, LOW ALKALI.
9. FLY ASH OR OTHER POZZOLANS CONFORMING TO ASTM C618 CLASS F MAY BE USED AS A PARTIAL SUBSTITUTION FOR PORTLAND CEMENT UP TO A MAXIMUM OF 25% TOTAL CEMENTITIOUS MATERIAL BY WEIGHT WHEN THE MIX DESIGN IS PROPORTIONED BY FIELD EXPERIENCE OR TRIAL MIXTURES.
10. WATER USED IN MIX SHALL BE POTABLE OR NONPOTABLE RECLAIMED/RECYCLED, CONFORMING TO ASTM C1602. PRIOR TO MIXING, FREE MOISTURE CONTENT OF AGGREGATES SHALL BE MEASURED, RECORDED, AND MIX WATER QUANTITY ADJUSTED ACCORDINGLY. MIX WATER AND FREE MOISTURE ON AGGREGATES SHALL NOT CONTAIN CHLORIDES OR ANY OTHER DELETERIOUS OR ODOROUS COMPOUNDS.
11. ADMIXTURES, WHERE USED FOR WATER REDUCTION AND SETTING TIME MODIFICATION SHALL CONFORM TO ASTM C494, SUPERPLASTICIZER SHALL CONFORM TO ASTM C1017.
12. SHRINKAGE REDUCING ADMIXTURES SHALL CONFORM TO ASTM C494, AND WHERE USED SHALL BE GRACO ECLIPSE, EUCLID EUCON SRA, SIKA CONTROL, OR APPROVED EQUAL. SPECIFIED MAXIMUM SHRINKAGE RATES SHALL BE LAB TESTED PER ASTM C157 FOR EACH MIX DESIGN AND AGGREGATE SOURCE.
13. WHERE SPECIFIED, AIR CONTENT SHALL BE SAMPLED AT THE POINT OF DISCHARGE AND FIELD TESTED PER ASTM C231, PRESSURE METHOD.
14. UNLESS OTHERWISE SPECIFIED, CONCRETE SHALL HAVE A MAXIMUM SLUMP OF 5 INCHES WITHOUT ADMIXTURES, AND A MAXIMUM OF 8 INCHES WHERE WATER REDUCTION OR SUPERPLASTICIZER ADMIXTURES ARE USED. SLUMP SHALL BE MEASURED PER ASTM C143 AT THE POINT OF DELIVERY WITH TOLERANCES PER ASTM C94. SELF CONSOLIDATING CONCRETE SHALL HAVE A MAXIMUM SPREAD OF 26 INCHES AS MEASURED PER ASTM C1611.
15. FOR LIGHT WEIGHT CONCRETE SLABS AND FILL OVER DECK, MAXIMUM AIR CONTENT SHALL BE 3 PERCENT AND MAXIMUM SLUMP SHALL BE 5 INCHES, MEASURED WITH ADMIXTURES.
16. USE PLACEMENT AND FINISHING PROCEDURES THAT PREVENT DELAMINATION, BLISTERING OR OTHER SURFACE DEFECTS.
17. NONSHRINK OR DRYPACK GROUT SHALL HAVE A MINIMUM 28 DAY COMPRESSIVE STRENGTH OF 5000 PSI, AND SHALL BE MASTERFLOW 713, EUCON NS GROUT, SIKA GROUT 212, OR APPROVED EQUAL. FOR THICK GROUT LAYERS AND LARGE VOLUME PLACEMENTS FOLLOW MANUFACTURER'S GUIDELINES, WHICH MAY INCLUDE THE ADDITION OF WASHED COARSE AGGREGATE AND POUR SEQUENCING. UNDER BASE PLATES LARGER THAN 6 SQUARE FEET, USE MASTERFLOW 928 OR OTHER APPROVED HI-FLOW GROUT.
18. THE USE OF CONSTRUCTION JOINTS (CJ) AT LOCATIONS NOT SHOWN ON THE PLANS AND DETAILS SHALL BE APPROVED BY THE SEOR PRIOR TO PLACEMENT OF CONCRETE. CJ'S SHALL BE USED WHENEVER CONCRETE PLACEMENT IS INTERRUPTED FOR MORE THAN 30 MINUTES. HORIZONTAL/FLAT CJ'S MAY BE UNFORMED, VERTICAL CJ'S SHALL BE FULLY FORMED WITH SHEAR KEYS. CJ'S SHALL BE CLEANED, LAITANCE REMOVED, AND ROUGHENED TO AN AMPLITUDE OF 1/4 INCH BY REMOVING THE ENTIRE SURFACE TO EXPOSE CLEAN AGGREGATE SOLIDLY EMBEDDED IN THE MORTAR MATRIX. IMMEDIATELY BEFORE NEW CONCRETE IS PLACED CJ'S SHALL BE WETTED AND STANDING WATER REMOVED.
19. PIPES, DUCTS OR CONDUIT SHALL NOT BE PLACED IN STRUCTURAL CONCRETE UNLESS SPECIFICALLY DETAILED ON THE STRUCTURAL DRAWINGS. PROVIDE SLEEVES FOR ALL PIPES THROUGH CONCRETE WALLS AND FOOTINGS.
20. REFER TO ARCHITECTURAL DRAWINGS AND SPECIFICATIONS FOR ALL MOULDS, REVEALS, GROOVES, CHAMFERS, DRIPS, ORNAMENTS AND OTHER FINISH REQUIREMENTS. UNLESS OTHERWISE NOTED, EXPOSED CORNERS OF SLABS, BEAMS, WALLS, COLUMNS, ETC. SHALL BE FORMED WITH 3/4 INCH CHAMFER STRIPS OR 1/2 INCH RADIUS TOOLED EDGE.
21. ALL DOWELS, ANCHORS AND OTHER EMBEDMENTS TO BE SET IN CONCRETE OR GROUT SHALL BE SECURED IN POSITION PRIOR TO PLACEMENT, NO WET SETTING, STABBING, RODDING OR OTHER MOVEMENT OF EMBEDDED ITEMS SHALL BE ALLOWED. THE CONTRACTOR SHALL COORDINATE WITH CONTRACT DOCUMENTS AND DISCIPLINES ITEMS SUCH AS; REINFORCEMENT, ANCHORS, INSERTS, HANGERS, NOSING, GUARDS, ELECTRICAL GROUNDS, INTEGRAL FRAMES, ETC.
22. CONCRETE AND GROUT MAINTAINED BETWEEN 50 TO 90 DEGREES FAHRENHEIT AND IN A MOIST, WIND SHELTERED CONDITION FOR A MINIMUM OF 7 DAYS AFTER PLACEMENT DOES NOT REQUIRE A WRITTEN PROTECTION PLAN. WHERE REQUIRED BY WEATHER AND SITE CONDITIONS, THE CONTRACTOR SHALL FOLLOW AN APPROVED COLD- OR HOT-WEATHER PROTECTION PLAN COMPLYING WITH ACI 306.1 / 301.
23. PRIOR TO ERECTING ANY ELEMENTS THAT LOAD THE FOUNDATION, CONCRETE MUST REACH AN UNCONFINED COMPRESSION STRENGTH OF 2000 PSI MINIMUM AS DETERMINED BY CYLINDER TESTING, AND MUST BE ALLOWED TO CURE FOR A MINIMUM OF 3 DAYS.
24. REVIEW MANUFACTURER REQUIREMENTS FOR OVERLAYMENTS, FINISHES AND FLOORING SYSTEMS TO BE APPLIED TO CONCRETE AS THESE MAY BE MORE RESTRICTIVE.
25. STYROFOAM VOID FILLER SHALL BE A DOW BUILDING SOLUTIONS PRODUCT "BLUE BOARD" TYPE OR APPROVED EQUAL WITH PROPERTIES APPROPRIATE FOR THE CONDITIONS OF USE.

STRUCTURAL CONCRETE SCHEDULE

	1	2	3	4	5	6
LOCATION	CEMENT	TYPE	STRENGTH	W/C RATIO*	AGG SIZE	SHRINKAGE
FILL OVER METAL DECK	II	LWC	4000	0.45	1"	0.05%
FILL ON STAIR PANS	II	LWC	4000	0.45	1/2"	0.04%
CONCRETE CURB	II	NWC	4000	0.50	3/4"	0.04%
ALL OTHER CONCRETE	II	NWC	3000	0.55	1"	-

CONCRETE SCHEDULE NOTES:

1. PORTLAND CEMENT TYPE.
2. INDICATES NORMAL WEIGHT CONCRETE (NWC). OR SAND LIGHT WEIGHT CONCRETE (LWC).
3. MINIMUM 28-DAY CYLINDER COMPRESSIVE STRENGTH IN PSI.
4. MAXIMUM WATER TO CEMENTITIOUS MATERIAL RATIO, INCLUDING FREE MOISTURE ON AGGREGATES.
   * 0.45 MAXIMUM W/C RATIO REQUIRED FOR CONCRETE RECEIVING ADHESIVE FINISHES.
5. MAXIMUM AGGREGATE SIZE, SEE ACI 318 FOR ADDITIONAL REQUIREMENTS INCLUDING GRADATION.
6. MAXIMUM SHRINKAGE AT 28 DAYS.

050500 - POST INSTALLED ANCHORS

UNLESS OTHERWISE NOTED ON THE DRAWINGS, THE FOLLOWING APPLIES TO ALL POST INSTALLED ANCHORAGE INTO HARDENED CONCRETE OR MASONRY WHICH INCLUDES TYPES SUCH AS EXPANSION, WEDGE, SLEEVE, ADHESIVE/EPOXY, SHOT-PIN, SCREW AND UNDERCUT.

1. INSTALL PER THE MANUFACTURER'S PRINTED INSTALLATION INSTRUCTIONS (MPII) EXCEPT AS OTHERWISE STATED IN THE SPECIFIED PRODUCT REPORTS. USE INSTALLATION PROCEDURES FOR CRACKED CONCRETE CONDITIONS. DO NOT USE CORE DRILL BITS FOR ANCHOR HOLES WITHOUT PRIOR SEOR APPROVAL. COPIES OF INSTALLATION INSTRUCTIONS SHALL BE MAINTAINED ON SITE.
2. PROVIDE GALVANIZED CARBON STEEL ANCHORS AT DRY INTERIOR LOCATIONS AND STAINLESS STEEL TYPE 304 OR 316 AT EXTERIOR / DAMP INTERIOR LOCATIONS. DOWELS TO RECEIVE CONCRETE COVER MAY BE PLAIN CARBON STEEL. ANCHORS SHALL BE CLEAN AND FREE OF DEBONDING SUBSTANCES.
3. UNLESS OTHERWISE NOTED, THE SPECIFIED EMBEDMENT REFERS TO THE FINAL INSTALLED EFFECTIVE DEPTH "Hef" AS DEFINED IN THE PRODUCT REPORT. MINIMUM ANCHOR HOLE DEPTH FOR I NSTALLATION MAY BE DEEPER. FOR EXPANSION ANCHORS PROVIDE A MINIMUM ANCHOR HOLE DEPTH PER THE MPII, BUT NOT LESS THAN THE SPECIFIED EMBEDMENT + THE SMALLER OF 1.5x DIAM OR 1 INCH. WHERE EMBEDMENT IS NOT SPECIFIED, PROVIDE AN EMBEDMENT DEPTH OF THE SMALLER OF 8 TIMES THE ANCHOR DIAMETER AND 2/3 THE THICKNESS OF THE MEMBER THE ANCHOR IS PLACED INTO.
4. MAINTAIN A MINIMUM OF 2 INCHES FROM EXISTING REINFORCEMENT, CONDUIT, POST TENSIONING (WHERE OCCURS), ETC. PRIOR TO DRILLING, CORING OR SHOOTING PINS INTO EXISTING CONCRETE OR MASONRY USE NON DESTRUCTIVE TESTING TO LOCATE SUCH ITEMS. FOR INSTALLATION DEEPER THAN 3 INCHES USE GROUND PENETRATING RADAR OR X-RAY METHODS.
5. WHERE THE SPECIFIED ANCHOR EMBEDMENT DEPTH, SPACING OR EDGE DISTANCE CANNOT BE PROVIDED, NOTIFY THE SEOR AND IOR.
6. PATCH ABANDONED HOLES AND SPALLS USING NON-SHRINK GROUT AND REPAIR FINISHES AS REQUIRED. ANCHORS PENETRATING THROUGH WATER PROOFING OR VAPOR MEMBRANES SHALL BE SEALED OR FLASHED.
7. INSTALL IN DRY CONCRETE OR MASONRY HAVING A MINIMUM AGE OF 21 DAYS UNLESS SPECIFICALLY APPROVED BY THE SEOR.
8. ADHESIVE/EPOXY ANCHORS ON THIS PROJECT ARE NOT DESIGNED TO SUPPORT, OR INTENDED TO RESIST SUSTAINED TENSION LOADS.
9. INSTALLERS PLACING OVERHEAD ADHESIVE ANCHORS SHALL BE CERTIFIED BY ACI OR APPROVED EQUIVALENT.
10. DO NOT PLACE POST INSTALLED ANCHORS IN CMU WITHIN 1 1/2" OF HEAD JOINTS OR INTO UNGROUTED CELLS UNLESS SPECIFICALLY INDICATED ON THE STRUCTURAL DOCUMENTS.

ANCHOR TESTING NOTES

11. UNLESS NOTED OTHERWISE PROVIDE SPECIAL INSPECTION AND TESTING OF POST-INSTALLED ANCHORS PER ACI 318 SECTION 17.8, THESE NOTES, AND THE FOLLOWING ANCHOR TEST SCHEDULE.
12. POST-INSTALLED ANCHORS SHALL BE INSPECTED BY A SPECIAL INSPECTOR SPECIFICALLY APPROVED BY THE ENFORCEMENT AGENCY FOR THAT PURPOSE.
13. PROOF LOADING IN TENSION (PULL TESTING) IS TO BE PERFORMED USING A HYDRAULIC RAM. ANCHORS SHALL MAINTAIN THE TEST LOAD FOR A MINIMUM OF 15 SECONDS AND SHALL HAVE NO DISCERNABLE MOVEMENT AS EVIDENCED BY LOOSENING OF THE WASHER UNDER THE NUT OR BY CONTINUOUS LOSS OF JACKING PRESSURE.
14. FOR ACCEPTANCE OF PROOF LOADING BY CALIBRATED TORQUE WRENCH TESTING, THE APPLICABLE TEST LOAD MUST BE REACHED WITHIN 1/2 TURN OF THE NUT.

EXPANSION ANCHOR TESTING

15. EXPANSION ANCHOR TESTING SHALL BE DONE IN THE PRESENCE OF THE SPECIAL INSPECTOR, AND MUST OCCUR WITHIN 24 HOURS AFTER INSTALLATION OF THE ANCHORS.
16. TEST 50% OF ALL EXPANSION ANCHORS FOR ATTACHMENT OF EQUIPMENT WEIGHING MORE THAN 400 LBS, AND 20% FOR ALL OTHER CONDITIONS ON THIS PROJECT. ACCEPTANCE CRITERIA FOR POST-INSTALLED ANCHORS SHALL BE PER CBC 1910A5.5
17. IF ANY ANCHOR FAILS TESTING, TEST ALL ANCHORS OF THE SAME CATEGORY NOT PREVIOUSLY TESTED UNTIL 20 CONSECUTIVE PASS, THEN RESUME INITIAL TESTING FREQUENCY.

CONDITION	PROOF TEST LOAD	TEST TORQUE
3/8" DIA x 1 1/2" EMBED INTO LT WT CONC	800 LBS	30 LB-FT
3/8" DIA x 2" EMBED INTO LT WT CONC	1250 LBS	30 LB-FT
3/8" DIA x 2 3/4" EMBED INTO LT WT CONC	1400 LBS	30 LB-FT
1/2" DIA x 3 1/4" EMBED INTO LT WT CONC	2100 LBS	40 LB-FT
5/8" DIA x 4" EMBED INTO LT WT CONC	2850 LBS	60 LB-FT
3/4" DIA x 4 3/4" EMBED INTO LT WT CONC	3600 LBS	125 LB-FT

ADHESIVE ANCHOR TESTING

18. ADHESIVE ANCHOR TESTING SHALL BE DONE IN THE PRESENCE OF THE SPECIAL INSPECTOR, AND MUST OCCUR BETWEEN 24 TO 72 HOURS AFTER INSTALLATION OF THE ANCHORS.
19. PROOF TEST LOADING SHALL USE A HYDRAULIC CYLINDER WITH A LOADING PLATE HAVING A HOLE DIAMETER OF 1.5 TO 2 TIMES THE ANCHOR HOLE DIAMETER (CONFINED CONFIGURATION).
20. TEST 50% OF ALL ADHESIVE ANCHORS FOR ATTACHMENT OF EQUIPMENT WEIGHING MORE THAN 400 LBS, AND 20% FOR ALL OTHER CONDITIONS ON THIS PROJECT. TEST 50% OF ALL VERTICAL WALL DOWELS INTO EXISTING CONCRETE FOUNDATIONS. ACCEPTANCE CRITERIA FOR ADHESIVE ANCHORS SHALL BE PER CBC 1910A5.5
21. IF ANY ANCHOR FAILS TESTING, TEST ALL ANCHORS OF THE SAME CATEGORY NOT PREVIOUSLY TESTED UNTIL 20 CONSECUTIVE PASS, THEN RESUME INITIAL TESTING FREQUENCY.

CONDITION	PROOF TEST LOAD
3/8" DIA ROD OR #3 REBAR x 2" TO 4" EMBED INTO NWC	2250 LBS
1/2" DIA ROD OR #4 REBAR x 3" TO 5" EMBED INTO NWC	3000 LBS
5/8" DIA ROD OR #5 REBAR x 4" TO 6" EMBED INTO NWC	4750 LBS
3/4" DIA ROD OR #6 REBAR x 5" TO 7" EMBED INTO NWC	6000 LBS
#3 REBAR > 4" EMBED	5200 LBS
#4 REBAR > 5" EMBED	9600 LBS
#5 REBAR > 6" EMBED	15000 LBS
#6 REBAR > 7" EMBED	21000 LBS
#7 REBAR > 8" EMBED	29000 LBS
#8 REBAR > 9" EMBED	38000 LBS

POWER ACTUATED FASTENER NOTES AND TESTING

22. POWER ACTUATED FASTENERS (SHOTPINS) DRIVEN INTO HARDENED CONCRETE SHALL BE HILTI "DS" 0.177 INCH DIAMETER WITH 1 INCH MINIMUM EMBEDMENT, SPACED AT LEAST 4 INCHES ON CENTER, AND AT LEAST 3 INCHES FROM EDGES UNLESS NOTED OTHERWISE. REFER TO ICC REPORT ESR-1663.
23. SHOTPINS MAY BE USED TO RESIST SHEAR OR TENSION LOADS OF UP TO 100 LBS, OR 80% OF THE ICC REPORT VALUES FOR THE CONDITION USED, WHICHEVER IS LESS.
24. TEST THE FIRST 10 SHOTPINS, AND 10% OF THE REMAINDER OF SHOTPINS ON THE PROJECT. THESE TEST SHALL BE RANDOMLY SELECTED AND UNDER THE PROJECT INSPECTOR'S SUPERVISION.
25. IF ANY PIN FAILS TESTING, TEST ALL PINS OF THE SAME CATEGORY NOT PREVIOUSLY TESTED UNTIL 20 CONSECUTIVE PASS, THEN RESUME THE INITIAL TESTING FREQUENCY.
26. PROOF TEST LOADING SHALL BE 200 LBS, OR TWICE THE DESIGN LOAD, WHICHEVER IS LESS. THE TEST LOAD SHALL BE APPLIED TO THE PIN IN SUCH A MANNER AS NOT TO RESIST THE SPALLING TENDENCY OF THE CONCRETE SURROUNDING THE PIN.

SHEET INDEX

S-1.00 GENERAL NOTES
S-1.01 GENERAL NOTES
S-1.10 TYPICAL CONCRETE DETAILS
S-1.20 TYPICAL STEEL BEAM AND STEEL METAL DECK DETAILS
S-1.30 TYPICAL METAL STUD DETAILS
S-1.31 TYPICAL METAL STUD DETAILS
S-2.00 FAINER WING - SECOND LEVEL FLOOR PLAN
S-2.10 FAINER WING - ROOF LEVEL FLOOR PLAN
S-3.00 SECTIONS AND DETAILS
S-3.01 SECTIONS AND DETAILS

VENTURA COUNTY
HEALTH CARE AGENCY

PUBLIC
VENTURA COUNTY
WORKS

ENGINEERING SERVICES

RASMUSSEN & ASSOCIATES
Architecture
Planning
Interiors
21 S. California Street
Fourth Floor
Ventura, California 93001
(805) 648-1234

REGISTERED PROFESSIONAL ENGINEER
HOWARD K. LAM
No. 2717
STRUCTURAL
STATE OF CALIFORNIA
DATE: 09-19-2022
FOR BRANDOW & JOHNSTON, INC

EST. 1945
BRANDOW & JOHNSTON
STRUCTURAL+CIVIL ENGINEERS
700 S FLOWER ST #1200, LOS ANGELES, CA 90017
T: (213) 596-4500 WWW.BJSCE.COM
B&J PROJECT #: S21-0199

PROFESSIONAL SEALS
LICENSED ARCHITECT
JAY LOMAGNO
C-20801
REN 12-31-23
STATE OF CALIFORNIA

PERMIT APPROVAL STAMP

REVIEWED IN ACCORDANCE WITH THE REQUIREMENTS OF T24, CCR
APPROVED
Department of Health Care Access and Information
FACILITIES DEVELOPMENT DIVISION
9/28/2022, 3:17:57 PM
H202495-56-00
Laura Baldrati

PERMIT NO OSHPD H202495-56-00

NO	REVISION	DATE
△	HCAI RESUBMITTAL	09/19/2022

PUBLIC WORKS PROJECT MANAGER

CONSULTANT PROJECT MANAGER
Jay Lomagno

DRAWN BY R&A
CHECKED BY JJL
CONSULTANT JOB NO A000495
DATE 06/15/2022

PROJECT TITLE AND ADDRESS

VENTURA COUNTY MEDICAL CENTER PEDIATRIC UNIT

300 HILLMONT AVE
VENTURA, CA 93003

COUNTY SPEC NUMBER CP21-04
COUNTY PROJECT NUMBER P6T20009
COUNTY DWG NO
SHEET 28 OF 89

SHEET TITLE
GENERAL NOTES

SHEET NO **S-1.00**

051200 - STRUCTURAL STEEL

1. DESIGN, FABRICATION AND ERECTION OF STRUCTURAL STEEL SHALL CONFORM TO THE SPECIFICATIONS AND STANDARDS OF THE AMERICAN INSTITUTE OF STEEL CONSTRUCTION (AISC), AS CONTAINED IN THE LATEST EDITION OF "SPECIFICATION FOR STRUCTURAL STEEL BUILDINGS" AISC 360, AND "CODE OF STANDARD PRACTICE FOR STEEL BUILDINGS AND BRIDGES" AISC 303.
2. STEEL TYPE SHALL BE AS SPECIFIED IN THE STRUCTURAL STEEL SCHEDULE UNLESS NOTED OTHERWISE.
3. ALL CONNECTIONS NOT SHOWN SHALL CONFORM TO THE "AISC MANUAL OF STEEL CONSTRUCTION" AND SHALL BE SUBMITTED ON SHOP DRAWINGS FOR REVIEW BY SEOR PRIOR TO FABRICATION.
4. FABRICATOR SHALL BE LICENSED IN CONFORMANCE WITH THE BUILDING CODE AND IN ACCORDANCE WITH THE AUTHORITY HAVING JURISDICTION. ANY FABRICATOR SUPPLYING MORE THAN 1 TON OF STEEL SHALL BE AISC CERTIFIED.
5. ALL STRUCTURAL AND MISCELLANEOUS STEEL PERMANENTLY EXPOSED TO WEATHER OR MOISTURE SHALL BE HOT DIP GALVANIZED PER ASTM A123 AFTER FABRICATION UNLESS A WEATHER PROOF OATING IS SPECIFIED. STEEL IN CONTACT WITH TREATED WOOD SHALL BE GALVANIZED. STAINLESS ND WEATHERING STEELS, WHERE SPECIFIED, ARE EXEMPT.
6. BOLT AND THREADED ROD ASSEMBLIES PERMANENTLY EXPOSED TO WEATHER OR MOISTURE SHALL BE HOT DIP GALVANIZED PER ASTM F2329 UNLESS A FIELD APPLIED WEATHER PROOF COATING IS SPECIFIED. GALVANIZED NUTS ARE TO BE OVERTAPPED WHERE REQUIRED TO AVOID STRIPPING. GALVANIZED BOLT ASSEMBLIES SHALL BE LUBRICATED AND TESTED PRIOR TO SHIPMENT. ALL THREADED COMPONENTS OF FASTENER ASSEMBLY SHALL BE GALVANIZED USING THE SAME PROCESS.
7. COATED STEEL SURFACES SHALL BE PROTECTED DURING CONSTRUCTION AND REPAIRED AS REQUIRED.
8. USE THE APPROPRIATE NUT AND WASHER TYPE, GRADE AND FINISH FOR THE SPECIFIED BOLT. BOLTS WITH UPSET THREADS ARE NOT ALLOWED UNLESS EXPLICITLY SPECIFIED. PROVIDE ASTM A194 GR 2H NUTS WITH ASTM A193 GR B7 THREADED ROD.
9. PLACE NONSHRINK GROUT UNDER ALL BASE PLATES AND ALLOW TO CURE BEFORE APPLYING LOADS. INDICATE GROUT VENT HOLES ON SHOP DRAWINGS WHERE REQUIRED. PRIMED OR PLAIN STEEL TO BE IN DIRECT CONTACT WITH NONSHRINK GROUT SHALL BE CLEANED TO BARE METAL BEFORE GROUTING.
10. FOR STEEL EMBEDDED IN CONCRETE OR MASONRY WHICH WILL INTERFERE WITH CONTINUOUS REINFORCING BARS, REQUEST CLARIFICATION FROM THE SEOR WHETHER TO PROVIDE HOLES FOR PASSAGE. DO NOT CUT HOLES IN STRUCTURAL STEEL WITHOUT PRIOR APPROVAL OF SEOR.
11. SEE ARCHITECTURAL DRAWINGS FOR ADDITIONAL STEEL FEATURES SUCH AS TABS, STUDS, WEEP HOLES OR OTHER ITEMS NOT SHOWN.
12. ARCHITECTURALLY EXPOSED STRUCTURAL STEEL (AESS) SHALL COMPLY WITH AISC CODE OF STANDARD PRACTICE, SECTION 10.
13. WELDED HEADED STUDS, THREADED STUDS, AND DEFORMED BARS SHALL COMPLY WITH ASTM A108 OR A496 TYPE C BY NELSON, OR EQUIVALENT, AND WELDED IN ACCORDANCE WITH MANUFACTURER'S RECOMMENDATIONS BY CERTIFIED WELDERS SO AS TO FULLY DEVELOP THE TENSILE CAPACITY OF THE CONNECTOR.
14. EMBEDDED ENDS OF ANCHORS IN CONCRETE OR GROUTED CMU SHALL BE HEADED OR HAVE DOUBLE NUTS LOCKED AGAINST EACH OTHER, UNO ON DRAWINGS.

STRUCTURAL STEEL SCHEDULE

SHAPE	ASTM	GRADE	MIN Fy (ksi)	MIN Fu (ksi)
WIDE FLANGE (W, M, & S) & TEE	A992	-	50	65
PLATE, ANGLE & CHANNEL (PL, L, C, MC)	A36			
TYPICAL UNO		-	36	58
WHEN NOTED AS GR 65	A572	65	65	65
HOLLOW STRUCTURAL SECTION (HSS)				
SQUARE OR RECTANGULAR	A500	C	50	62
ROUND	A500	C	46	62
WHEN NOTED AS GR 50	A1085	-	50	58
PIPE	A53	B	35	60
MACHINE BOLTS	A307	A	-	60
ANCHOR ROD, ANCHOR BOLTS	F1554	36 OR 55 WELDABLE	36	58
THREADED RODS	A36	-	36	58
HIGH STRENGTH ROD	A193	B7	-	58

051210 - HIGH STRENGTH BOLTS

1. UNLESS NOTED OTHERWISE WHEN BOLTING STEEL COMPONENTS, BOLTS 3/4" DIAMETER AND LARGER SHALL BE ASTM A325 / F1852 HIGH STRENGTH, BOLTS 5/8" DIAMETER AND SMALLER SHALL BE A307.
2. JOINT ASSEMBLIES USING HIGH-STRENGTH BOLTS SHALL BE IN ACCORDANCE WITH THE CURRENT EDITION OF THE "AISC (RCSC) SPECIFICATION FOR STRUCTURAL JOINTS USING HIGH-STRENGTH BOLTS".
3. HIGH STRENGTH BOLTS SHALL CONFORM TO ASTM A325 / F1852 OR ASTM A490 / F2280 AS INDICATED, TYPE 1 OR 3, NUTS SHALL CONFORM TO ASTM A563 GRADE DH OR A194 GR 2H, AND WASHERS SHALL CONFORM TO ASTM F436 WITH GRADE, TYPE AND FINISH TO MATCH THE SPECIFIED BOLT.
4. PAINT SHALL NOT BE PERMITTED ON CONTACT SURFACES UNLESS NOTED OTHERWISE. CONTACT SURFACES OF BOLTED PARTS SHALL BE DESCALED AND FREE OF DIRT, OIL, BURRS, PITS, AND OTHER DEFECTS WHICH PREVENT SOLID SEATING OF PARTS.
5. ALL HIGH STRENGTH BOLTS SHALL BE TIGHTENED TO THE AISC SNUG TIGHT CONDITION UNLESS SPECIFIED AS SLIP-CRITICAL (SC).
6. SLIP-CRITICAL BOLTS SHALL HAVE CLASS "A" FAYING SURFACES. SLIP-CRITICAL JOINT ASSEMBLIES SHALL BE FULLY PRE-TENSIONED BY TURN-OF-NUT TIGHTENING, CALIBRATED WRENCH TIGHTENING, TENSION CONTROL BOLT ASSEMBLIES CONFORMING TO ASTM F1852 / F2280, OR BY DIRECT TENSION INDICATOR WASHERS CONFORMING TO ASTM F959.
7. HIGH STRENGTH BOLT ASSEMBLIES PERMANENTLY EXPOSED TO WEATHER OR MOISTURE SPECIFIED AS ASTM A325 / F1852 SHALL BE TYPE 1 GALVANIZED PER ASTM F2329 OR B695, AND ASTM A490 / F2280 SHALL BE TYPE 3 PLAIN WITH GRADE DH3 NUTS.

051220 - STEEL WELDING

1. WELDING PROCEDURES, ELECTRODES AND WELDER QUALIFICATIONS SHALL CONFORM TO THE "CODE FOR WELDING IN BUILDING CONSTRUCTION". AMERICAN WELDING SOCIETY (AWS). D1.1 AND THE AISC." SPECIFICATION FOR DESIGN, FABRICATION AND ERECTION OF STRUCTURAL STEEL FOR BUILDINGS.
2. ALL WELDERS SHALL HAVE EVIDENCE OF PASSING THE AWS STANDARD QUALIFICATION TESTS, AND SHALL BE CERTIFIED FOR THE WORK THEY ARE PERFORMING IN ACCORDANCE WITH THE AUTHORITY HAVING JURISDICTION.
3. PROJECT WELDING SHALL BE PERFORMED ONLY IN ACCORDANCE WITH WELDING PROCEDURE SPECIFICATIONS (WPS) SUBMITTED BY THE CONTRACTOR AND REVIEWED BY THE SEOR AND PROJECT WELDING INSPECTOR. THE WPS SHALL BE IN ACCORDANCE WITH AWS D1.1-D1.4 CURRENT ADDITION.
4. WELDING OF STRUCTURAL STEEL SHALL BE PERFORMED PER AWS D1.1 USING E70XX ELECTRODES UNLESS OTHERWISE NOTED.
5. WELDING OF REINFORCING BARS SHALL BE PERFORMED PER AWS D1.4 USING E90XX ELECTRODES.
6. WELDING OF METAL DECK AND LIGHT GAGE STEEL SHALL BE IN ACCORDANCE WITH AWS D1.3.
7. WHERE WELDED METAL DECK ATTACHMENTS ARE SPECIFIED TO STEEL SUPPORTS ARE PUDDLE WELDS OR WELDED STUDS SPACED AS NOTED. EFFECTIVE AREA OF PUDDLE WELD SHALL BE NOT LESS THAN 1/2" EFFECTIVE DIAMETER AND FOR SEAM WELDS NOT LESS THAN 3/8" WIDE BY 1" LONG.
8. WELDS SHALL BE TESTED PER AWS D1.1 WITH MAGNETIC PARTICLE TESTING AT RATE OF 10% UNLESS NOTED OTHERWISE.
9. ALL PENETRATION WELDS SHALL BE TESTED PER AWS D1.1 WITH ULTRASONIC TESTING. ALL CJP GROOVE WELDS SHALL BE ULTRASONICALLY TESTED IN MATERIAL 5/16" THICK OR GREATER. FILLET WELDS AND PARTIAL PENETRATION SHALL BE TESTED MAGNETIC PARTICLE (MP) AT A RATE OF 40%.
10. ALL GROOVE OR BUTT WELDS SHALL BE COMPLETE PENETRATION WELDS, UNO. EXPOSED BUTT WELDS SHALL BE GROUND SMOOTH.
11. ALL EXPOSED WELDS ON ARCHITECTURALLY EXPOSED STRUCTURAL STEEL (AESS) SHALL COMPLY WITH AISC CODE OF STANDARD PRACTICE, SECTION 10.
12. FIELD WELDS SHALL HAVE BEEN INDICATED WHERE THEY ARE EXPECTED TO OCCUR. THE CONTRACTOR SHALL DETERMINE THE ACTUAL FIELD WELDING NECESSARY TO COMPLETE THE PROJECT AND INCLUDE ALL ASSOCIATED COSTS WITHIN THE BASE PRICE.
13. REMOVE ALL WELD TABS AND WELD BACKING BARS UNLESS OTHERWISE NOTED. WHERE BACKING IS REMOVED THE WELD ROOT SHALL BE BACKGOUGED TO SOUND METAL AND FILLED WITH METAL DECK.

053100 - STEEL DECK

1. LIGHT GAGE STEEL DECKING AND ACCESSORIES SHALL BE FABRICATED OF SHEET METAL CONFORMING TO ASTM A653 / A1063 SS GRADE 50 WITH GALVANIZED G60 COATING, OR ASTM A1008 / A1039 SS GRADE 50 WITH A SHOP-PRIMER AND FINISH COATING AS SPECIFIED BY THE ARCHITECT.
2. SEE STEEL DECK SCHEDULE FOR DECK TYPE, GAGE, MINIMUM SECTION PROPERTIES, AND ATTACHMENT.
3. SEE TYPICAL DETAILS FOR REINFORCEMENT AND SUPPLEMENTAL STEEL REQUIREMENTS AT DECK OPENINGS. OPENINGS SHOWN ON THE STRUCTURAL DRAWINGS INDICATE THE GENERAL ARRANGEMENT ONLY, THE CONTRACTOR SHALL COORDINATE AND VERIFY THE FINAL SIZE AND LOCATIONS OF DECK OPENINGS WITH OTHER CONSTRUCTION DRAWINGS AND VARIOUS TRADES.
4. EDGE OF DECK CLOSURE PLATES SHALL BE HELD WITHIN ± 1/2" OF THE DIMENSIONS REQUIRED ON THE ARCHITECTURAL DRAWINGS. CONFIRM THE CUT LENGTH OF DECK AND EDGE OF DECK LOCATIONS FROM FIXED SURVEY REFERENCE LINES.
5. PROVIDE 2" MINIMUM FULL BEARING AT ALL SUPPORTS PERPENDICULAR TO THE DECK DIRECTION. AT SUPPORTS PARALLEL TO THE DECK A LOW DECK PLUTE SHALL BE ALIGNED, OR GIRDER FILLER INSTALLED FOR REQUIRED ATTACHMENTS. END LAPS SHALL BE 2" MINIMUM AND OCCUR AT SUPPORTS.
6. DECK SHALL BE INSTALLED CONTINUOUS OVER 3 OR MORE EQUALLY SPACED SUPPORTS WHERE FRAMING PERMITS. UNFILLED DECK SHALL HAVE A 2 SPAN MINIMUM.
7. PROVIDE ALL NECESSARY ACCESSORIES INCLUDING POUR STOPS, GIRDER FILLERS, COLUMN CLOSURES, SUMP PANS, CELL/RIB/DECK EDGE CLOSURES, INSULATION, ETC. AS INDICATED ON THE CONSTRUCTION DOCUMENTS AND ACCORDING TO SDI PUBLICATION No. 31. METAL ACCESSORIES SHALL HAVE THE SAME GAGE AS DECKING UNO.
8. SPECIAL INSPECTIONS AND QUALIFICATION OF WELDING SPECIAL INSPECTORS FOR COLD-FORMED STEEL FLOOR AND ROOF DECK SHALL BE IN ACCORDANCE WITH THE REQUIREMENTS OF THE STEEL DECK INSTITUTE (SDI) QA/QC STANDARDS.

ABBREVIATIONS

A	
AB	ANCHOR BOLT
ADDL	ADDITIONAL
ADJ	ADJACENT
AFF	ABOVE FINISH FLOOR
ALT	ALTERNATE
ARCH	ARCHITECT(URAL)
B	
BLDG	BUILDING
BLKG	BLOCKING
BM	BEAM
BN	BOUNDARY NAILING
BO	BOTTOM OF
BOTT, (B)	BOTTOM
BTWN	BETWEEN
C	
C	CAMBER
CIP	CAST IN PLACE
CJ	CONTROL/CONSTRUCTION JOINT
CJP, CP	COMPLETE JOINT PENETRATION
CL	CENTERLINE
CLG	CEILING
CLR	CLEAR
CMU	CONCRETE MASONRY UNIT
COL	COLUMN
CONC	CONCRETE
CONN	CONNECTION
CONT	CONTINUOUS
CTR(D)	CENTER(ED)
CY	CUBIC YARDS
D	
DB	BAR DIAMETER
DBL	DOUBLE
DC	DEMAND CRITICAL
DEMO	DEMOLISH, DEMOLITION
DIA, DIAM	DIAMETER
DIAG	DIAGONAL
DIM	DIMENSION
DO	DITTO
DWG	DRAWING
E	
EA	EACH
EF	EACH FACE
EJ	EXPANSION JOINT
ELEC	ELECTRICAL
ELEV	ELEVATION, ELEVATOR
EMBED	EMBEDMENT
EN	EDGE NAIL
EO	EDGE OF
EQ	EQUAL
EQUIP	EQUIPMENT
ES	EACH SIDE
EW	EACH WAY
EXIST, (E)	EXISTING
EXP	EXPANSION
EXT	EXTERIOR
F	
FLR	FLOOR
FN	FIELD NAILING
FND	FOUNDATION
FO	FACE OF
FS	FAR SIDE
FT	FOOT, FEET
FTG	FOOTING
G	
GA	GAUGE
GALV	GALVANIZED
GLBM, GB	GLUED-LAMINATED BEAM
GR	GRADE
GRBM	GRADE BEAM
H	
HK	HOOK
HORIZ	HORIZONTAL
HS	HIGH STRENGTH
HSS	HOLLOW STRUCTURAL SECTION
HT	HEIGHT
I	
ID	INSIDE DIAMETER
IN	INCH
INT	INTERIOR
J	
JT	JOINT

ABBREVIATIONS

K	
K, KIP(S)	KILOPOUND
KLF	KIPS PER LINEAR FOOT
KSF	KIPS PER SQUARE FOOT
KSI	KIPS PER SQUARE INCH
L	
L	ANGLE
LB, LBS	POUND(S)
LF	LINEAR FEET
LFRS	LATERAL FORCE RESISTINGSYSTEM
LLH	LONG LEG HORIZONTAL
LLV	LONG LEG VERTICAL
M	
MAX	MAXIMUM
MB	MACHINE BOLT
MECH	MECHANICAL
MFR	MANUFACTURE
MIN	MINIMUM
MW	MEDIUM WEIGHT
N	
(N)	NEW
NDT	NON-DESTRUCTIVE TESTING
NS	NEAR SIDE
NTS	NOT TO SCALE
NW(C)	NORMAL WEIGHT (CONCRETE)
O	
OC	ON CENTER
OD	OUTSIDE DIAMETER
OH	OPPOSITE HAND
OPP	OPPOSITE
P	
PAF, PDF	POWDER DRIVEN/POWERACTUATED FASTENER
PJP, PP	PARTIAL JOINT PENETRATION
PL	PLATE
PLF	POUND PER LINEAR FOOT
PSF	POUND PER SQUARE FOOT
PSI	POUND PER SQUARE INCH
PT	PRESSURE TREATED WOOD,POST/PRE-TENSIONED
R	
R	RADIUS
REF	REFERENCE
REINF	REINFORCING
REQD	REQUIRED
S	
(S)EOR	(STRUCTURAL) ENGINEER OFRECORD
SC	SLIP CRITICAL
SCHED	SCHEDULE
SDS, SMS	SELF-DRILLING / SHEET METALSCREW
SIM	SIMILAR
SN	SILL NAILING
SOG	SLAB ON GRADE
SPECS	SPECIFICATIONS
SQ	SQUARE
SS	STAINLESS STEEL
STD	STANDARD
STIFF	STIFFENER
STL	STEEL
STRUCT	STRUCTURAL
SYM	SYMMETRICAL
T	
T&B	TOP & BOTTOM
TO	TOP OF
TYP	TYPICAL
U	
UNO	UNLESS NOTED OTHERWISE
V	
VERT	VERTICAL
VIF	VERIFY IN FIELD
W	
W/	WITH
W/O	WITHOUT
WF	WIDE FLANGE
WP	WORK POINT
WT	WEIGHT
WWF	WELDED WIRE FABRIC

VENTURA COUNTY HEALTH CARE AGENCY

PUBLIC VENTURA COUNTY WORKS

ENGINEERING SERVICES

RASMUSSEN & ASSOCIATES
Architecture
Planning
Interiors
21 S. California Street
Fourth Floor
Ventura, California 93001
(805) 648-1234

REGISTERED PROFESSIONAL ENGINEER RICHARD R. LAND No. 21417 STRUCTURAL STATE OF CALIFORNIA

DATE: 09-19-2022
FOR BRANDOW & JOHNSTON, INC

EST. 1945
BRANDOW & JOHNSTON
STRUCTURAL•CIVIL ENGINEERS
700 S FLOWER ST #1200, LOS ANGELES, CA 90017
T: (213) 596-4500
WWW.BJSCE.COM
B&J PROJECT #: S21-0199

PROFESSIONAL SEALS

LICENSED ARCHITECT JAY LOMAGNO C-20801 STATE OF CALIFORNIA

PERMIT APPROVAL STAMP

REVIEWED IN ACCORDANCE WITH THE REQUIREMENTS OF T24,CCR
APPROVED
Department of Health Care Access and Information
FACILITIES DEVELOPMENT DIVISION
9/28/2022, 3:17:57 PM
H202495-56-00
Laura Baldrati

PERMIT NO OSHPD H202495-56-00

NO	REVISION	DATE
1	HCAI RESUBMITTAL	09/19/2022

PUBLIC WORKS PROJECT MANAGER

CONSULTANT PROJECT MANAGER
Jay Lomagno

DRAWN BY R&A | CHECKED BY JJL

CONSULTANT JOB NO A000495 | DATE 06/15/2022

PROJECT TITLE AND ADDRESS

VENTURA COUNTY MEDICAL CENTER PEDIATRIC UNIT

300 HILLMONT AVE
VENTURA, CA 93003

COUNTY SPEC NUMBER
CP21-04

COUNTY PROJECT NUMBER
P6T20009

COUNTY DWG NO | SHEET 29 OF 89

SHEET TITLE
GENERAL NOTES

SHEET NO **S-1.01**

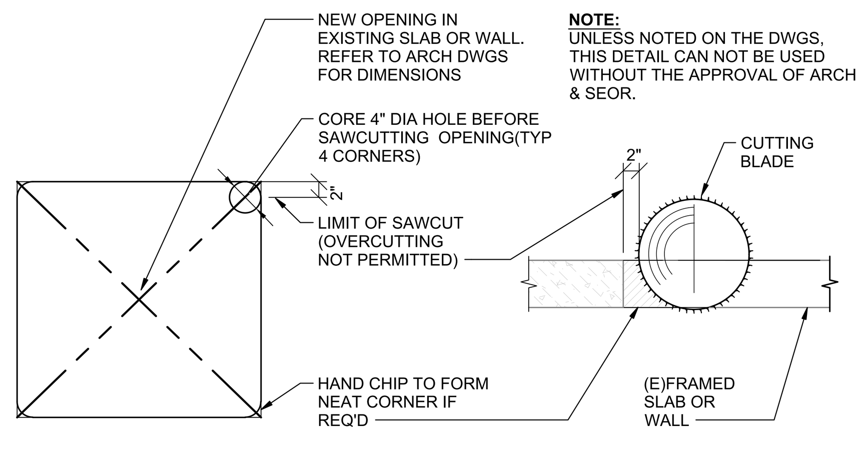

TYPICAL SAWCUT OPENING 9

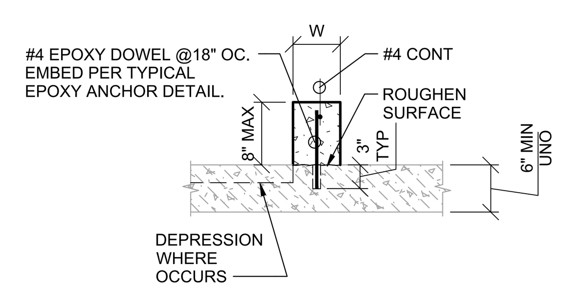

W = 8" OR LESS

NOTES:

1. COORDINATE WIDTH, HEIGHT AND LOCATION OF CURBS WITH ARCHITECTURAL DRAWINGS.

TYPICAL CONCRETE CURB @ (E) CONCRETE SLAB 10

LAP SPLICE LENGTH

BAR SIZE	f'c = 3,000 PSI				f'c = 4,000 PSI			
	TOP BARS		OTHER BARS		TOP BARS		OTHER BARS	
	CASE 1	CASE 2	CASE 1	CASE 2	CASE 1	CASE 2	CASE 1	CASE 2
#3	28	42	22	32	24	36	19	28
#4	37	56	29	43	32	48	25	37
#5	47	70	36	54	40	60	31	47
#6	56	84	43	64	48	72	37	56
#7	81	122	63	94	70	106	54	81
#8	93	139	72	107	80	121	62	93
#9	105	157	81	121	91	136	70	105
#10	118	177	91	136	102	153	79	118
#11	131	196	101	151	113	170	87	131

NOTES:
1. ALL LAP SPLICES SHALL BE CLASS B UNO. LENGTHS ARE IN INCHES.
2. VALUES ARE BASED ON GRADE 60 (Fy=60 KSI) REINFORCING.
3. TOP BARS REFERS TO HORIZONTAL REINFORCING WITH MORE THAN 12" OF CONCRETE PLACED BELOW REINFORCING BAR DURING POUR. OTHER BARS ARE ALL BOTTOM BARS ARE HORIZONTAL BARS WITH LESS THAN 12" OF CONCRETE PLACED BELOW REINFORCING BAR DURING POUR AND ALL VERTICAL BARS.
4. WHERE REQUIRED EMBEDMENT CANNOT BE ACHEIVED WITH STRAIGHT BARS, PROVIDE 180 OR 90 DEGREE HOOKS WITH ADEQUATE HOOKED BAR EMBEDMENT.
5. FOR LIGHTWEIGHT CONCRETE, MULTIPLY TABULATED VALUES BY 1.33.
6. TABULATED VALUES SHALL BE MULTIPLIED BY 1.25 FOR ALL SPLICES OF CHORD BARS, VERTICAL BOUNDARY REINFORCING SPLICES, AND DRAG BAR EMBEDMENT OR SPLICE.
7. SEE BUILDING CODE AND LATEST VERSION OF ACI FOR ALL REQUIREMENTS NOT NOTED.
8. FOR EPOXY COATED REINFORCEMENT, SEE CURRENT BUILDING CODE FOR ADJUSTMENT FACTORS.
9. WHERE BARS OF DIFFERENT SIZES ARE LAP SPLICED IN TENSION, SPLICE LENGTH SHALL BE THE LARGER OF THE DEVELOPMENT LENGTH Ld OF THE LARGER BAR AND THE TENSION LAP SPLICE LENGTH OF THE SMALLER BAR.
10. ALL HOOKED BARS SHALL EXTEND AS FAR AS POSSIBLE TO THE OPPOSITE FACE WITH A MINIMUM 2" END COVER AND EMBEDMENT NOT LESS THAN THE SCHEDULE.
11. CASE #1 AND #2 ARE DEFINED AS FOLLOWS:
    CASE #1 = CONCRETE COVER IS AT LEAST 1.0db AND CENTER-TO-CENTER SPACING IS AT LEAST 2.0db
    CASE #2 = CONCRETE COVER IS LESS THAN 1.0db OR CENTER-TO-CENTER SPACING IS LESS THAN 2.0db
12. FOR CLASS A STRAIGHT DEVELOPMENT LENGTHS, Ld, DIVIDE SPLICE LENGTHS BY 1.3.

HOOK LENGTH

BAR SIZE	f'c = 3,000 PSI		f'c = 4,000 PSI	
	STD HOOK DEVELOPMENT LENGTH Ldh (IN)	CONFINED HOOK LENGTH Ldg (IN)	STD HOOK DEVELOPMENT LENGTH Ldh (IN)	CONFINED HOOK LENGTH Ldg (IN)
#3	6	6	6	6
#4	8	6	7	6
#5	10	8	9	7
#6	12	10	10	8
#7	14	11	12	10
#8	16	13	14	11
#9	18	14	15	12
#10	20	16	17	14
#11	22	18	19	15

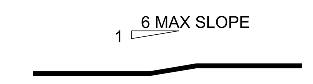

OFFSET BEND

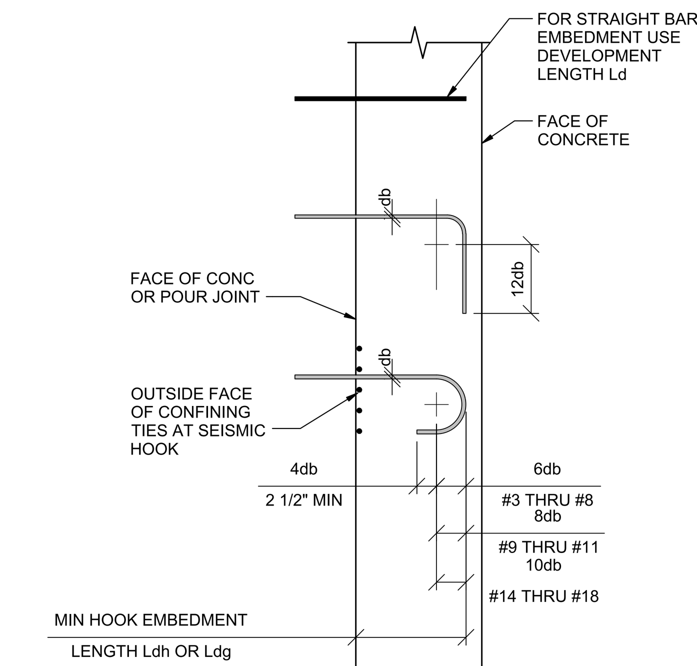

EMBEDMENT LENGTH DETAIL

TYPICAL LAP SPLICE AND HOOK LENGTH SCHEDULE 2

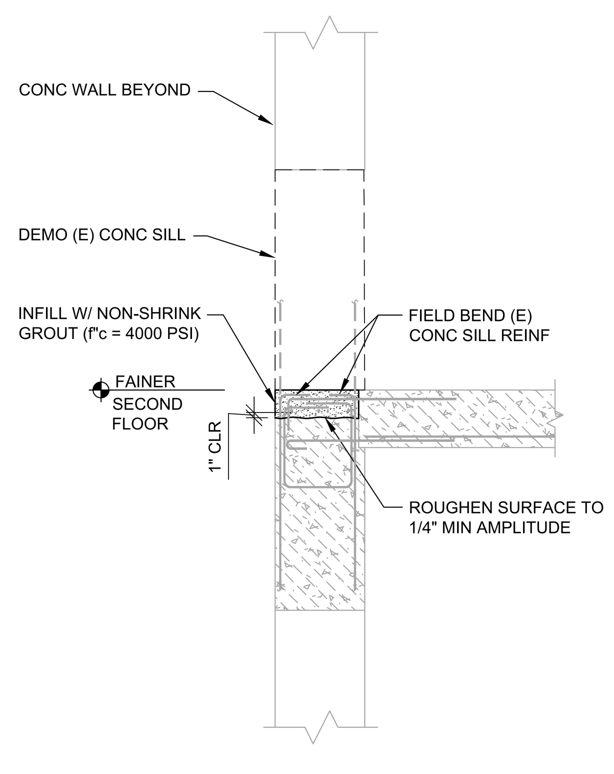

DEMO (E) CONCRETE SILL 11

LOAD TEST:
1. THE FOLLOWING LOAD TESTING PROCEDURES APPLY TO EACH ANCHOR SIZE AND GROUT PRODUCT PLACED BY EACH INSTALLATION TEAM FOR EACH OF THE FOLLOWING INSTALLATIONS:
   a.) VERTICAL SET OVERHEAD b.) VERTICAL SET DOWN c.) HORIZONTAL
2. PRIOR TO BEGINNING WORK, PROOF TEST 3 ANCHORS TO A PROOF TEST LOAD OF 125% OF TABULATED TEST LOAD.
3. LOAD TEST INSTALLED ANCHORS AT A RATE OF 100%.
4. WHEN TEST LOAD IS NOT ACHIEVED, REPLACE THE DEFICIENT ANCHORS AND RETEST. ASSOCIATED COSTS SHALL BE BORNE BY THE CONTRACTOR.
5. WHERE EMBEDMENT NOTED ON SPECIFIC DETAILS IS LESS THAN EMBEDMENT NOTED ON THIS SCHEDULE, REDUCE TEST LOAD BY THE RATION OF THE EMBEDMENTS.

INSTALLATION NOTES:
1. PROVIDE HOLE OF DEPTH AND DIAMETER AS SCHEDULED. AVOID ANY EXISTING REINFORCING STEEL BY RELOCATING HOLE SLIGHTLY. CONTRACTOR SHALL ALLOW FOR 5% REDRILLING. ABANDONED HOLES SHALL BE GROUTED. WHEN INSTALLING GROUTED ANCHOR INTO PRESTRESSED CONCRETE (PRE-OR-POST TENSIONED), LOCATE TENDONS BY NON-DESTRUCTIVE METHODS PRIOR TO INSTALLATION. EXERCISE EXTREME CARE AND CAUTION TO AVOID DAMAGING THE TENDONS DURING INSTALLATION. MAINTAIN A MINIMUM CLEARANCE OF ONE INCH BETWEEN THE TENDON AND THE HOLE FOR THE GROUTED ANCHOR. COSTS TO REPAIR/REPLACE DAMAGED TENDONS SHALL BE BORNE BY THE CONTRACTOR.
2. FOR EPOXY GROUT, CLEAN HOLE THOROUGHLY BY VACUUM OR AIR PRESSURE, HOLE TO BE DRY BEFORE GROUTING, FOR CEMENT GROUT CLEAN, AND PRE-WET HOLE 24 HOURS BEFORE GROUTING; REMOVE FREE WATER PRIOR TO GROUTING.
3. PLACE GROUT IN HOLE WITH CAULKING GUN OR SIMILAR EQUIPMENT. APPROXIIMATELY 2/3 FULL. STARING AT BOTTOM, FILL HOLE.
4. INSERT DOWEL INTO HOLE FORCING MATERIAL AROUND SIDES OF BAR AND COMPLETELY FILLING VOIDS.
5. PROVIDE SUPPORT FOR ANCHOR UNTILL GROUT HAS CURED.
6. EPOXY GROUT: HILTI HIT-RE 500 V3 (ICC ESR-3814)
7. ALL WORK SHALL BE INSTALLED UNDER CONTINUOUS INSPECTION BY INSPECTOR OF RECORD.
8. SURFACES TO RECEIVE NEW CONCRETE TO BE ROUGHENED PER SPECIFICATIONS.

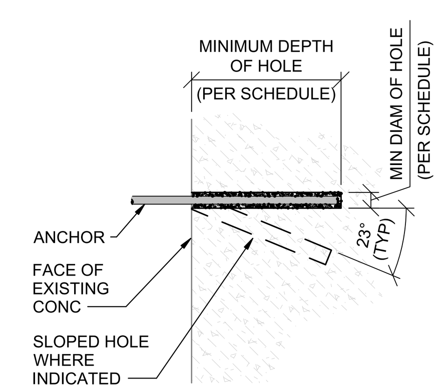

NOTE:
UNLESS NOTED/ REFERENCED ON THE DETAILS/DRAWINGS, THIS DETAIL CANNOT BE USED TO REPLACE CAST-IN-PLACE ANCHORS WITHOUT PRIOR APPROVAL OF THE STRUCTURAL ENGINEER.

EPOXY GROUT

BAR SIZE, ASTM A615 GRADE 60	MIN HOLE DIAM	MIN DEPTH	TEST LOAD	BAR SIZE, ASTM A36 FULLY THREADED	MIN HOLE DIAM	MIN DEPTH	TEST LOAD
#3	1/2"	6"	6.0 KIPS	1/2"	9/16"	6"	4.6 KIPS
#4	5/8"	8"	10.6 KIPS	5/8"	11/16"	8"	7.3 KIPS
#5	3/4"	10"	16.6 KIPS	3/4"	13/16"	10"	10.8 KIPS
#6	1"	14"	23.8 KIPS	7/8"	15/16"	12"	15.0 KIPS
#7	1-1/8"	16"	32.5 KIPS	1"	1-1/16"	14"	19.6 KIPS
#8	1-1/4"	18"	42.4 KIPS	1-1/8"	1-3/16"	16"	24.7 KIPS
#9	1-3/8"	21"	53.6 KIPS	1-1/4"	1-5/16"	18"	31.4 KIPS

TYPICAL GROUTED ANCHOR DETAIL 8

TYPICAL CARBON STEEL ANCHOR INSTALLATION DESIGN AND TEST VALUES

BOLT DIAMETER	3/8"		1/2"		5/8"		3/4"	
MIN. EMBEDMENT	1 1/2"	2"	2"	3-1/4"	3-1/8"	4"	3-3/4"	4-3/4"
MIN. HOLE DEPTH	2"	2-5/8"	2-5/8"	4"	3-7/8"	2-3/4"	4-5/8"	5-3/4"
MIN MEMBER THICKNESS	3 1/4"	4"	4"	6"	5"	6"	6"	8"
INSTALLATION TORQUE	25 FT-LBS		40 FT-LBS		60 FT-LBS		110 FT-LBS	

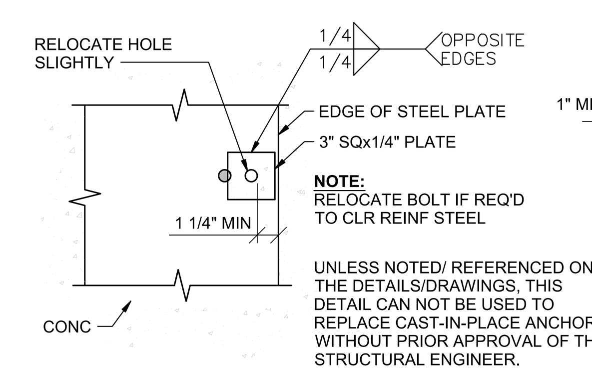

ANCHOR RELOCATION DETAIL

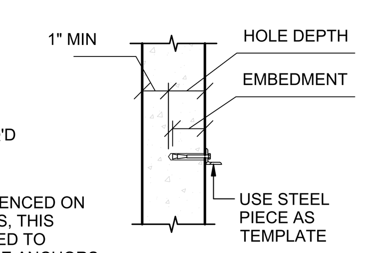

ANCHOR AT WALL OR SLAB

INSTALLATION:

1. ALLOWABLE WEDGE ANCHOR TYPES: HILTI KWIK BOLT TZ2 (ICC ESR-4266)
2. UNO INSTALL ANCHORS PER MANUFACTURER'S RECOMMENDED SPECIFICATIONS.
3. THE TABULATED INSTALLATION AND TEST VALUES PERTAIN TO USE IN HARDROCK CONCRETE, LIGHT-WEIGHT CONCRETE AND CONCRETE FILL OVER METAL DECK. CONCRETE FILL OVER METAL DECK SHALL CONSIST OF 20GA. MIN. METAL DECK WITH EITHER HARD ROCK OR LIGHT WEIGHT CONCRETE. CONCRETE SHALL HAVE A MINIMUM STRENGTH OF 3000 PSI.
4. WHEN INSTALLING DRILLED-IN ANCHORS IN NON-PRESTRESSED REINFORCED CONCRETE, USE CARE AND CAUTION TO AVOID CUTTING OR DAMAGING THE REINFORCING BARS OR OTHER EMBEDDED ITEMS SUCH AS ELECTRICAL/TELECOMMUNICATIONS CONDUIT AND GAS LINES. WHEN INSTALLING DRILLED-IN ANCHORS INTO PRESTRESSED CONCRETE (PRE OR-POST-TENSIONED). LOCATE TENDONS DURING INSTALLATION. MAINTAIN A MINIMUM CLEARANCE OF ONE INCH BETWEEN THE REINFORCEMENT AND THE DRILLED-IN ANCHOR.
5. DRILLED EXPANSION TYPE ANCHOR BOLTS SHALL BE USED ONLY WHERE DETAILED OR FOR ATTACHMENT OF MECH, ELEC, OR MISC ACCESSORIES OR EQUIPMENT TO THE STRUCTURE.
6. WHERE EDGE DISTANCE AND SPACING IS NOT SHOWN ON DETAILS, REFER ICC ESR REPORT FOR MINIMUM VALUES.

TYPICAL CONCRETE POST-INSTALLED ANCHOR 4

VENTURA COUNTY HEALTH CARE AGENCY

PUBLIC VENTURA COUNTY WORKS
ENGINEERING SERVICES

RASMUSSEN & ASSOCIATES
Architecture
Planning
Interiors
21 S.California Street
Fourth Floor
Ventura, California 93001
(805) 648-1234

DATE: 09-19-2022
FOR BRANDOW & JOHNSTON, INC

EST. 1945
BRANDOW & JOHNSTON
STRUCTURAL+CIVIL ENGINEERS
700 S FLOWER ST #1200, LOS ANGELES, CA 90017
T: (213) 596-4500 WWW.BJSCE.COM
B&J PROJECT #: S21-0199

PROFESSIONAL SEALS

PERMIT APPROVAL STAMP

REVIEWED IN ACCORDANCE WITH THE REQUIREMENTS OF T24, CCR
APPROVED
Department of Health Care Access and Information
FACILITIES DEVELOPMENT DIVISION
9/28/2022, 3:17:57 PM
H202495-56-00
Laura Baldrati

PERMIT NO OSHPD H202495-56-00

NO	REVISION	DATE
△	HCAI RESUBMITTAL	09/19/2022

PUBLIC WORKS PROJECT MANAGER

CONSULTANT PROJECT MANAGER: Jay Lomagno

DRAWN BY: R&A — CHECKED BY: JJL

CONSULTANT JOB NO: A000495 — DATE: 06/15/2022

PROJECT TITLE AND ADDRESS

VENTURA COUNTY MEDICAL CENTER PEDIATRIC UNIT

300 HILLMONT AVE
VENTURA, CA 93003

COUNTY SPEC NUMBER: CP21-04

COUNTY PROJECT NUMBER: P6T20009

COUNTY DWG NO — SHEET 30 OF 89

SHEET TITLE: TYPICAL CONCRETE DETAILS

SHEET NO: **S-1.10**

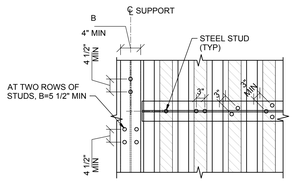

PLAN VIEW (A)

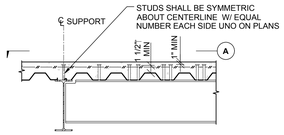

SECTION VIEW

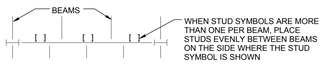

NON-UNIFORM STUD CALL OUT

NOTES:
1. DECK AND FILL REQ'D PER PLAN.
2. NELSON STUDS ARE 3/4"DIA UNO.
3. MAX STUD SPACING SHALL BE 12" OC.
4. MIN FLANGE THICKNESS SHALL BE 5/16" FOR 3/4" DIA STUDS.

TYPICAL STEEL SHEAR STUD PLACEMENT DETAIL | 14

METAL DECK							CONCRETE OVER DECK			CONCRETE OVER DECK		
DECK TYP	DEPTH	TYPE	GAGE	I (IN^4/FT)	+S (IN^3/FT)	-S (IN^3/FT)	SLAB	CONC TYPE	REINF	ENDS AND INTERMEDIATE SUPPORT	LONGTITUDINAL SUPPORTS AND MEMBERS PARALLEL TO FLUTE	SIDE SEAMS
A	3"	VERCO PLW3 OR W3 FORMLOCK (IAPMO ER-0217)	20	0.907	0.510	0.528	3 1/4" FILL, 6 1/4" TOTAL DEPTH	LWC	4x4-W4.0xW4.0	(4) 3/4" DIA FUSION (PUDDLE) WELDS PER SHEET	3/4" DIA FUSION (PUDDLE) WELDS@12" OC	TOP SEAM WELD @12" OC

STEEL DECK NOTES:

1. PLACE REINFORCEMENT 1" CLEAR FROM TOP OF CONCRETE.
2. PROVIDE VENTED DECKS AT PATIOS, ROOFS, AND ALL AREAS WHICH RECEIVE WATERPROOFING. COORDINATE WITH ARCHITECT FOR EXACT LOCATIONS FOR CONCRETE FILLED DECK.
3. PROVIDE MINIMUM 2" END BEARING LENGTH AT ALL SUPPORTS.
4. EXERCISE SPECIAL CARE AROUND STAIRS, ELEVATORS, DUCT SHAFTS, AND OTHER INTERIOR FLOOR OPENINGS. THE SPAN TABLE SHALL BE STRICTLY ADHERED TO, OR SHORING OF METAL DECK WILL BE REQUIRED.
5. ⟵ INDICATES DOUBLE ROW OF DECK ATTACHMENT. SEE PLAN FOR LOCATIONS.
6. DECKING SHALL BE CONTINUOUS OVER AT LEAST 2 SPANS AND 3 SPANS WHERE FRAMING PERMITS. SINGLE SPAN NOT PERMITTED UNLESS SPECIFICALLY SHOWED ON PLAN OR APPROVED BY SEOR.
7. MAXIMUM DECK SPAN SHALL NOT EXCEED 10' - 0"
8. WHERE STEEL FRAMING DESIGNATED WITH DRAG CONNECTIONS SYMBOL (●), PROVIDE A FULL DECK SHEET ADJACENT AND PARALLEL TO STEEL MEMBER.

MAX CLEAR SPAN BETWEEN SUPPORTS		
METAL DECK		A
SPAN	1	10'-0"
	2	11'-0"
	3	11'-0"

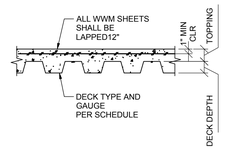

TYPICAL CONCRETE FILL OVER METAL DECK SCHEDULE | 5

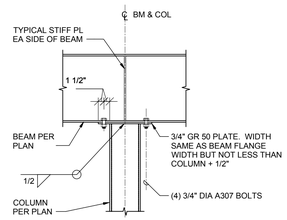

TYPICAL BEAM TO TOP OF COLUMN CONNECTION | 10

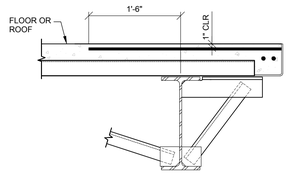

NOTE:
REFER TO DECK PARALLEL CONDITION FOR BALANCE OF INFO

DECK PERPENDICULAR

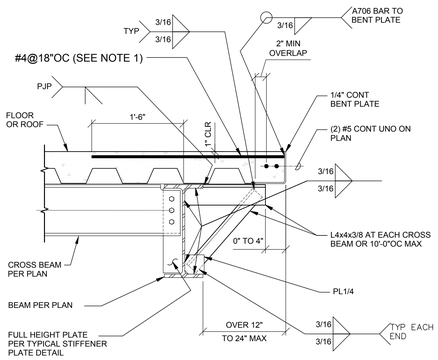

DECK PARALLEL

OVER 12" TO 24" MAX OVERHANG

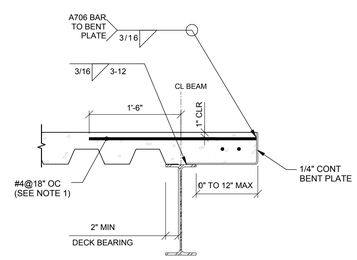

0" TO 12" MAX OVERHANG

NOTES:
1. ALTERNATE: 1/2" DIA D2L @12" FOR HARD ROCK CONCRETE SLABS ONLY.
2. DECK PERPENDICULAR TO BEAM SHOWN. DECK PARALLEL TO BEAM CONDITION SIMILAR.
3. OUTRIGGER ANGLES MAY BE SHOP OR FIELD WELDED AT CONTRACTOR'S OPTION.
4. SOMD MESH NOT SHOWN FOR CLARITY IN DETAILS.
5. WHERE HANDRAIL, GUARDRAIL, ARCHITECTURAL CLADDING, CMU OR CONCRETE WALLS, LADDERS, ARCHITECTURAL OR MEP COMPONENT ATTACHMENT OCCUR, PROVIDE MIN 1/4" BENT PLATE UNO WITH #4@12"OC WELDED BARS. EXTEND PLATE MIN 1'-0" BEYOND ATTACHMENT.
6. FOR ALTERNATE EDGE OF DECK DETAIL, SEE TYPICAL INTERIOR EDGE OF DECK DETAIL.

TYP EXTERIOR EDGE OF SLAB FOR CONC FILL OVER MTL DECK | 8

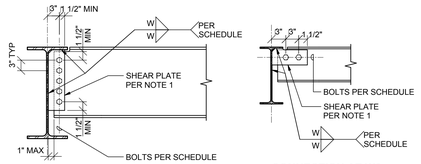

CONNECTION AT W6x AND SMALLER

CONNECTION SCHEDULE			
BEAM SIZE	A325N BOLTS		FILLET WELD W MIN
	No	SIZE	
W10x OR LESS	2	7/8" DIA	1/4"
W12x, W14x	3	7/8" DIA	1/4"
W16x	4	7/8" DIA	5/16"
W18x, W21x	5	7/8" DIA	5/16"
W24x	6	7/8" DIA	5/16"

NOTES:
1. SHEAR PLATE THICKNESS TO MATCH SUPPORTED BEAM WEB THICKNESS (3/8" MIN).
2. HORIZONTAL SHORT SLOTTED HOLES MAY BE USED AT CONTRACTORS OPTION EXCEPT AT SEISMIC CONNECTIONS.
3. FOR CHANNELS FRAMING INTO WF BEAM, USE TABLE FOR SIMILAR DEPTH.

TYPICAL BEAM TO BEAM CONNECTION | 2

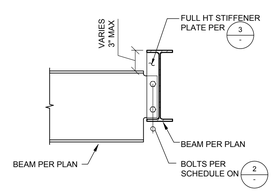

TYPICAL OFFSET BEAM TO BEAM CONNECTION | 11

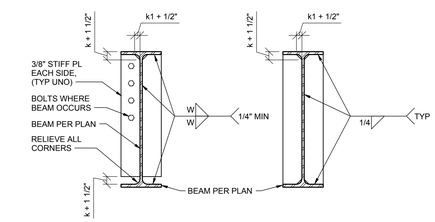

TYPICAL STIFFENER PLATE

FULL HEIGHT STIFFENER PLATE REQUIRED WHERE BEAMS BEAR ON COLUMNS

NOTES:
1. BALANCE OF INFORMATION PER TYPICAL BEAM TO BEAM CONNECTION DETAIL.
2. STIFFENER PLATES MAY BE ASTM 36 MIN UNO.

TYPICAL FULL HEIGHT STIFFENER PLATE CONNECTION | 3

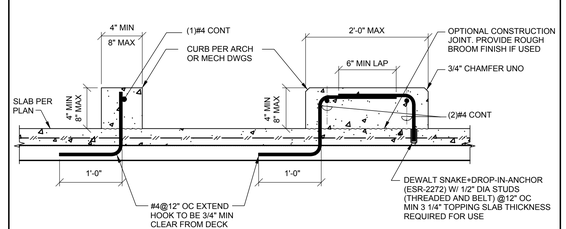

NOTE:
1. CAST IN PLACE REBAR OR DROP-IN-ANCHOR MAY BE USED AT CONTRACTOR'S DISCRETION IN ALL CONDITIONS.

TYPICAL CONCRETE CURB @ METAL DECK | 12

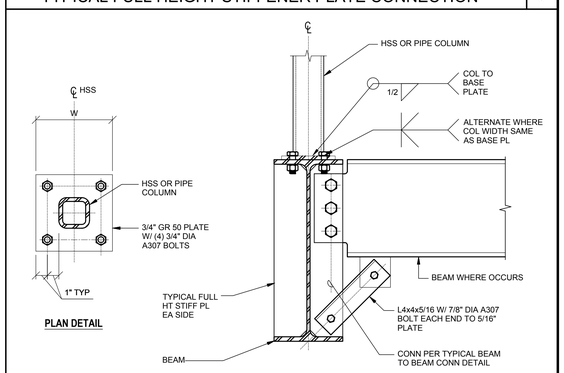

TYPICAL HSS COLUMN TO BEAM DETAIL | 4

VENTURA COUNTY HEALTH CARE AGENCY

PUBLIC VENTURA COUNTY WORKS

ENGINEERING SERVICES

RASMUSSEN & ASSOCIATES
Architecture
Planning
Interiors
21 S. California Street
Fourth Floor
Ventura, California 93001
(805) 648-1234

REGISTERED PROFESSIONAL ENGINEER ADRIAN R. LAND No. 21417 STRUCTURAL STATE OF CALIFORNIA

DATE: 09-19-2022
FOR BRANDOW & JOHNSTON, INC

EST. 1945

BRANDOW & JOHNSTON
STRUCTURAL•CIVIL ENGINEERS
700 S FLOWER ST #1200, LOS ANGELES, CA 90017
T: (213) 596-4500 WWW.BJSCE.COM
B&J PROJECT #: S21-0199

PROFESSIONAL SEALS

LICENSED ARCHITECT JAY LOMAGNO C-20801 REGISTERED PROFESSIONAL ENGINEER STATE OF CALIFORNIA

PERMIT APPROVAL STAMP

REVIEWED IN ACCORDANCE WITH THE REQUIREMENTS OF T24, CCR
APPROVED
Department of Health Care Access and Information
FACILITIES DEVELOPMENT DIVISION
9/28/2022, 3:17:57 PM
H202495-56-00
Laura Baldrati

PERMIT NO OSHPD H202495-56-00

NO	REVISION	DATE
1	HCAI RESUBMITTAL	09/19/2022

PUBLIC WORKS PROJECT MANAGER

CONSULTANT PROJECT MANAGER
Jay Lomagno

DRAWN BY	CHECKED BY
R&A	JJL
CONSULTANT JOB NO	DATE
A000495	06/15/2022

PROJECT TITLE AND ADDRESS

VENTURA COUNTY MEDICAL CENTER PEDIATRIC UNIT

300 HILLMONT AVE
VENTURA, CA 93003

COUNTY SPEC NUMBER
CP21-04

COUNTY PROJECT NUMBER
P6T20009

COUNTY DWG NO | SHEET 31 OF 89

SHEET TITLE
TYPICAL STEEL BEAM AND STEEL METAL DECK DETAILS

SHEET NO
S-1.20

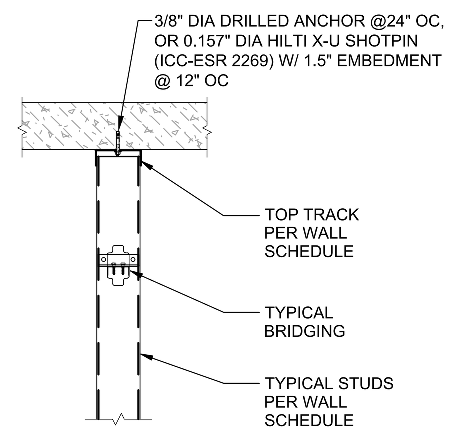

TYPICAL TOP TRACK CONSTRUCTION 13

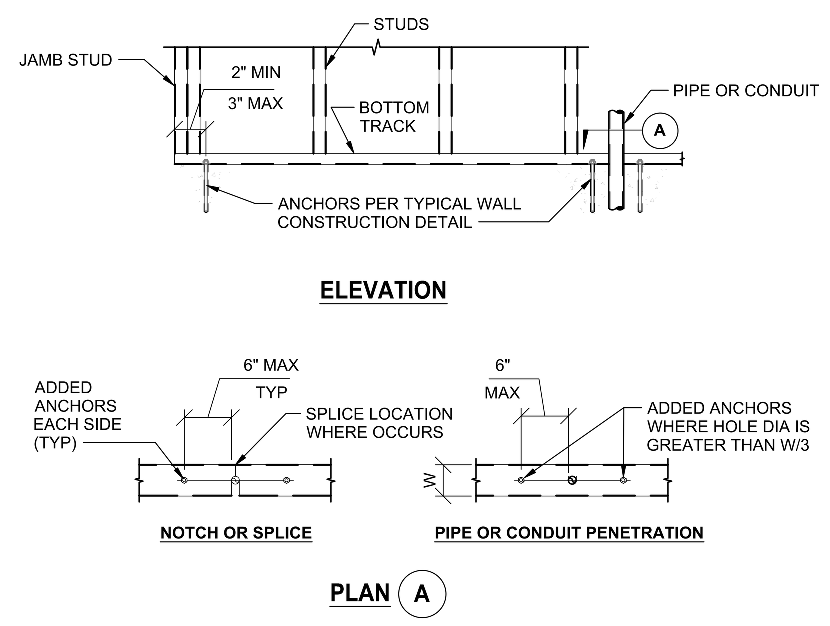

TYPICAL BOTTOM TRACK CONSTRUCTION 14

NOTES:
1. SIMPSON "SUBH" BRIDGING CONNECTORS MAY BE USED AS ALTERNATES TO 16GA CLIPS AT STUDS.

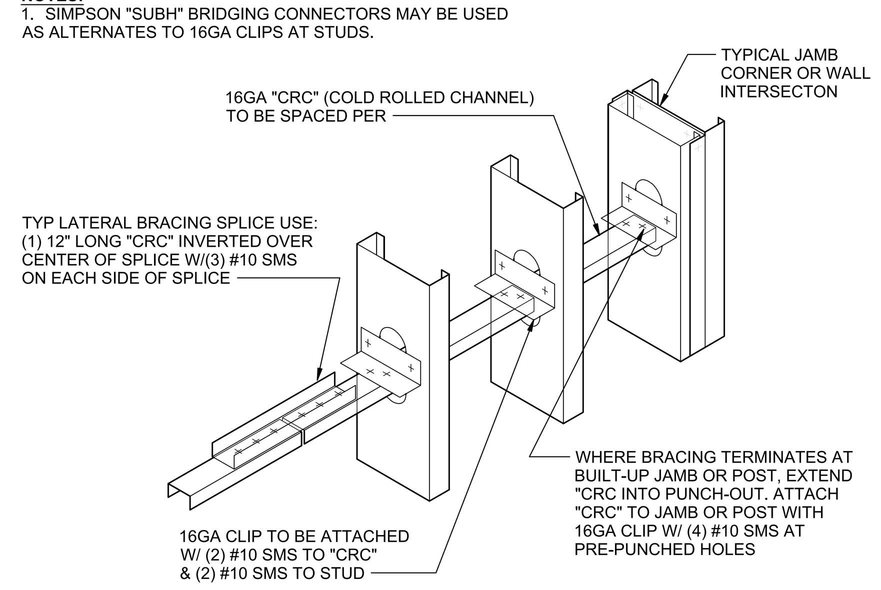

TYPICAL CONTINUOUS WALL BRIDGING (DRYWALL ONE SIDE) 15

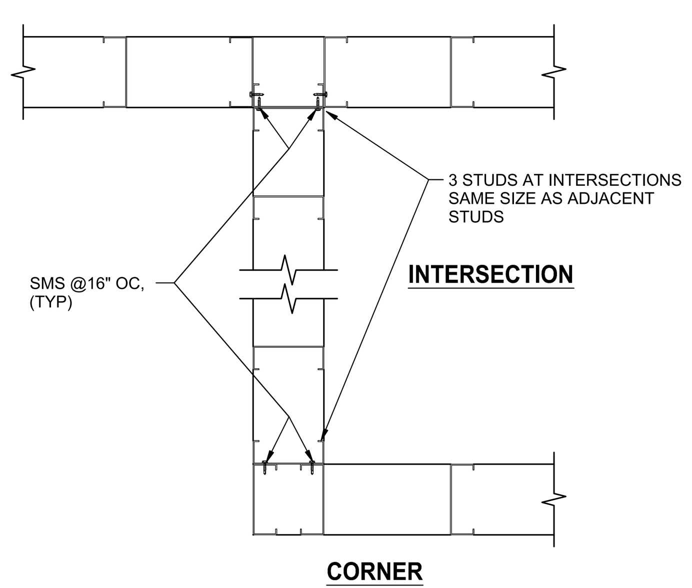

TYPICAL CORNERS AND INTERSECTIONS 14

NOTES:

1. USE 16 GA STUDS MINIMUM WHERE EQUIPMENTS, CABINETS, ELECTRICAL PANELS, ETC. ARE SUPPORTED BY WALL. REFER TO ARCHITECTURAL, MECHANICAL, PLUMBING AND ELECTRICAL DRAWINGS FOR LOCATIONS.
2. ALL STUDS ARE 16" OC UNLESS NOTED OTHERWISE.
3. WHERE WALLS HAVE CABINETS/CASEWORK ON BOTH SIDES, USE SPACING 12" OC WHERE 16" OC CALLED OUT.
4. BOTTOM TRACK SIZE AND GAGE TO MATCH WALL STUDS.
5. AT FULL HT TRACK FOR TYPE "C" JAMB, STOP TRACK 2" FROM FLOOR AND TOP TRACK TO AVOID INTERFERENCE WITH SILL AND TOP TRACKS.
6. REFER TO ARCHITECTURAL SPECIFICATIONS AND DRAWINGS FOR WALL THICKNESSES.
7. CONTRACTOR MAY USE PRO-X HEADERS (IAPMO REPORT # 0286) AT INTERIOR NON-LOAD BEARING CONDITIONS IN LIEU OF THIS DETAIL. FOLLOW ALL REQUIREMENTS AND ATTACH TO JAMB STUDS PER ICC REPORT.

INTERIOR WALL STUD SCHEDULE

WALL TYPE	SIZE & SPACING	Fy (ksi)	MAX HT	TOP TRACK FULL HEIGHT
4-LAYERS OF 5/8" GYP TOTAL	600S162-54@16" OC	50	12'-2"	16GA, 2" UNPUNCHED CONT. DEEP LEG TRACK, ALTERNATIVELY, 16GA 2.5" SLOTTED TRACK
	400S162-54@16" OC	50	12'-2"	
2-LAYERS OF 5/8" GYP TOTAL	600S162-43@16" OC	33	12'-2"	16GA, 2" UNPUNCHED CONT. DEEP LEG TRACK, ALTERNATIVELY, 16GA 2.5" SLOTTED TRACK
	400S162-54@16" OC	50	12'-2"	
1-LAYER OF 5/8" GYP TOTAL (1)	600S162-43@24" OC	33	12'-2"	16GA, 2" UNPUNCHED CONT. DEEP LEG TRACK, ALTERNATIVELY, 16GA 2.5" SLOTTED TRACK
	400S162-43@16" OC	33	12'-2"	

TABLE NOTES:

1. WHEREVER STUDS DO NOT HAVE GYPSUM BOARD FINISH ON BOTH FLANGES, WALL BRIDGING REQUIRED PER TYPICAL WALL BRIDGING DETAIL 15/-

BOTTOM TRACK FASTENER SCHEDULE

INTERIOR PARTITIONS TYPICALLY	0.145" DIA POWDER DRIVEN PINS @ 32" OC OR 3/8" DIA ANCHORS
INTERIOR PARTITIONS ADJACENT TO DEPRESSIONS OR CURBS	3/8" DIA ANCHORS @ 48" OC

INTERIOR WALL OPENING SCHEDULE SCHEDULE

MAX HEIGHT	MAXIMUM OPENING WIDTH	JAMB SIZE TYPE	JAMB SIZE STUD SIZE / TRACK SIZE	SILL SIZE TYPE	SILL SIZE STUD SIZE / TRACK SIZE	HEADER SIZE TYPE	HEADER SIZE STUD SIZE / TRACK SIZE
12'-2" OR LESS	4'-6"	A1	TO MATCH WALL STUD SCHEDULE	B1	NONE	C1, C2 [2]	TO MATCH WALL STUD SCHEDULE
			NONE		2" DEEP LEG-43		(2)-2" DEEP LEG, GAGE TO MATCH STUD
12'-2" OR LESS	8'-0"	A1, A2 [1]	STUDS BACK TO BACK TO MATCH WALL STUD SCHEDULE	B1	NONE	C2	2.5" FLANGE-54
			2" DEEP LEG. GAGE TO MATCH STUD		2" DEEP LEG-43		(2)-2" DEEP LEG-54

TABLE NOTES:

1. ACCEPTABLE TO USE TYPE "A1" JAMB WHERE NO MORE THAN 2-LAYERS OF 5/8" GYP TOTAL IS USED.
2. ACCEPTABLE TO USE TYPE "C1" HEADER WHERE NO MORE THAN 2-LAYERS OF 5/8" GYP TOTAL IS USED; AT 6" STUDS, 16GA HEADER TRACK IS REQUIRED.

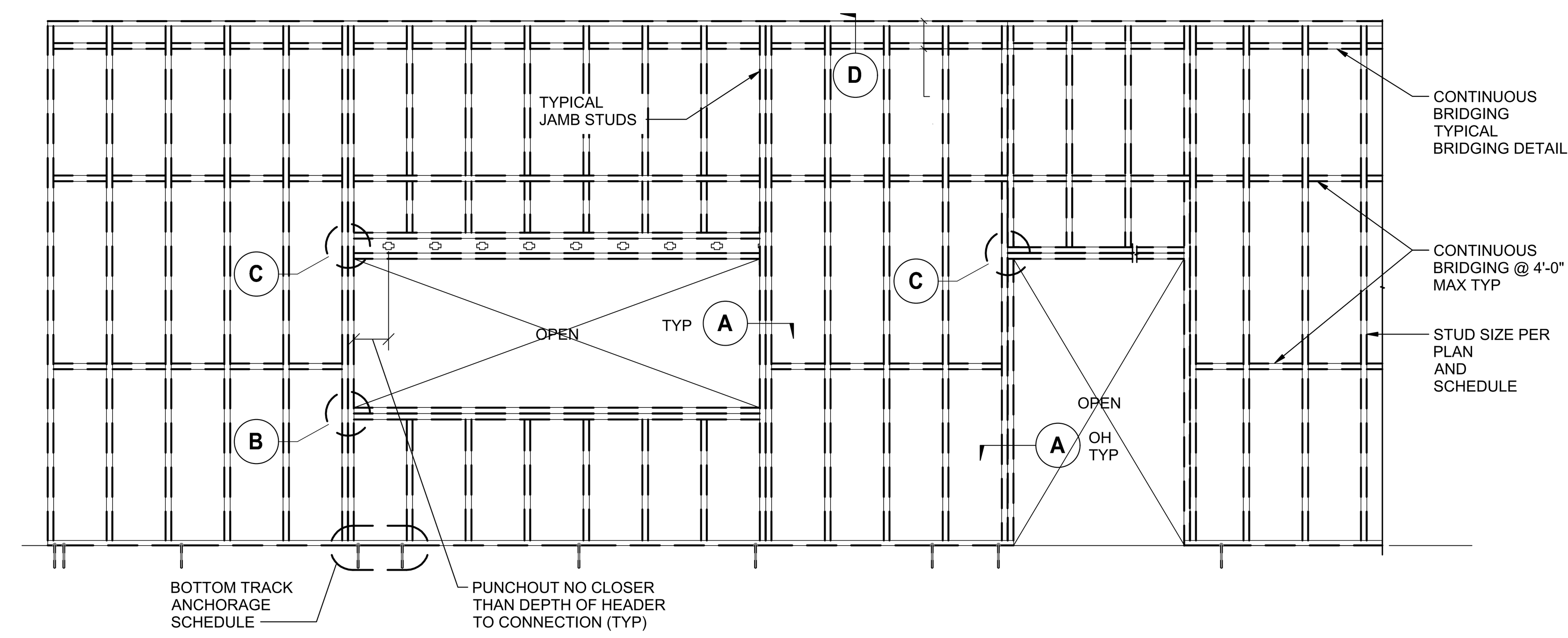

INTERIOR METAL STUD WALL ELEVATION

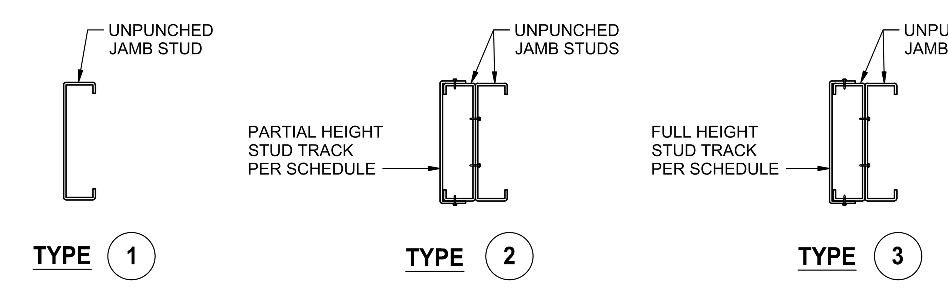

INTERIOR JAMB STUD CONFIGURATION A

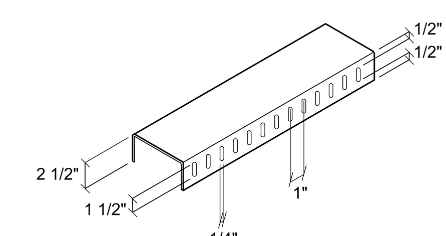

SLOTTED TRACK DIAGRAM

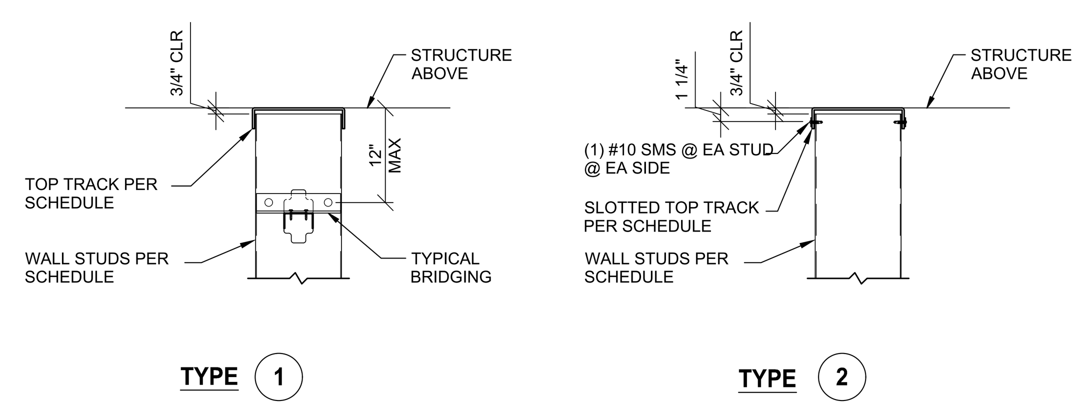

NOTES:
1. NO CONNECTIONS OF ARCHITECTURAL FINISHES TO TOP TRACK.
2. DO NOT CONNECT STUDS TO TOP TRACK.

TOP TRACK CONFIGURATION D

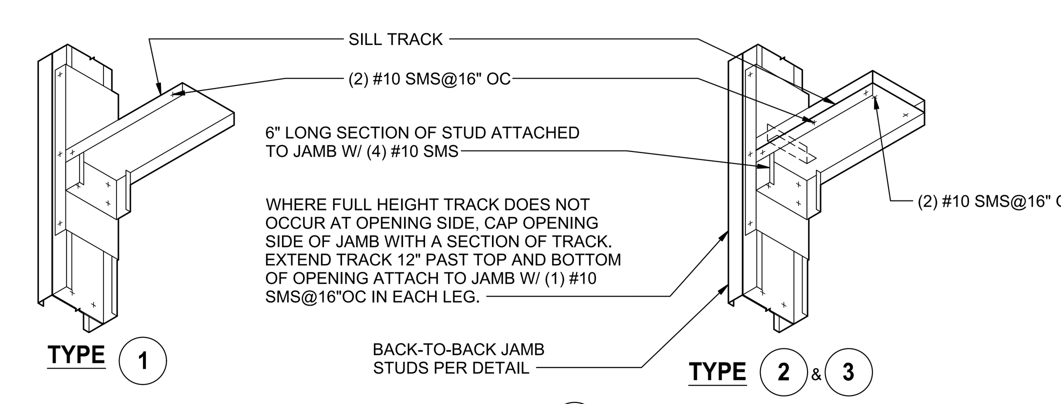

ISOMETRIC SILL TO JAMB B

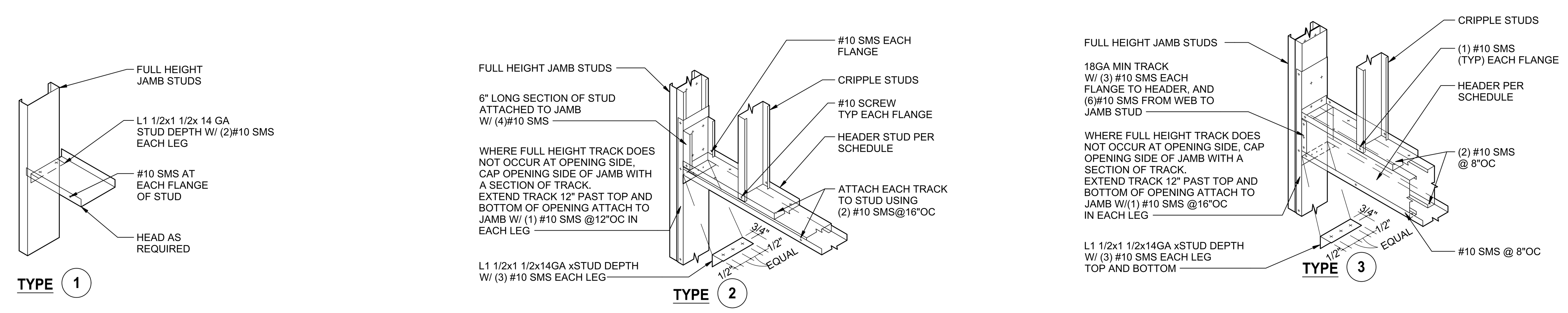

ISOMETRIC HEADER TO JAMB C

TYPICAL INTERIOR METAL STUD WALL CONSTRUCTION 4

VENTURA COUNTY HEALTH CARE AGENCY

PUBLIC VENTURA COUNTY WORKS

ENGINEERING SERVICES

RASMUSSEN & ASSOCIATES
Architecture
Planning
Interiors
21 S.California Street
Fourth Floor
Ventura, California 93001
(805) 648-1234

DATE: 09-19-2022
FOR BRANDOW & JOHNSTON, INC

EST. 1945
BRANDOW & JOHNSTON
STRUCTURAL+CIVIL ENGINEERS
700 S FLOWER ST #1200, LOS ANGELES, CA 90017
T: (213) 596-4500 WWW.BJSCE.COM
B&J PROJECT #: S21-0199

PROFESSIONAL SEALS

PERMIT APPROVAL STAMP

REVIEWED IN ACCORDANCE WITH THE REQUIREMENTS OF T24, CCR
APPROVED
Department of Health Care Access and Information
FACILITIES DEVELOPMENT DIVISION
9/26/2022, 3:17:57 PM
H202495-56-00
Laura Baldrati

PERMIT NO OSHPD H202495-56-00

NO	REVISION	DATE
△	HCAI RESUBMITTAL	09/19/2022

PUBLIC WORKS PROJECT MANAGER
CONSULTANT PROJECT MANAGER Jay Lomagno
DRAWN BY R&A
CHECKED BY JJL
CONSULTANT JOB NO A000495
DATE 06/15/2022
PROJECT TITLE AND ADDRESS

VENTURA COUNTY MEDICAL CENTER PEDIATRIC UNIT

300 HILLMONT AVE
VENTURA, CA 93003

COUNTY SPEC NUMBER CP21-04
COUNTY PROJECT NUMBER P6T20009
COUNTY DWG NO
SHEET 32 OF 89
SHEET TITLE
TYPICAL METAL STUD DETAILS
SHEET NO
S-1.30

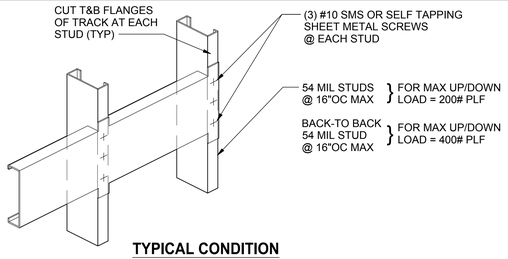

TYPICAL CONDITION

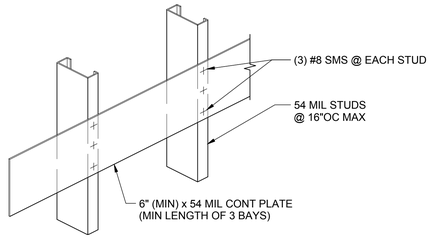

LIGHT EQUIPMENT CONDITION

(USE FOR ITEMS WITH WEIGHT UP TO 20#)

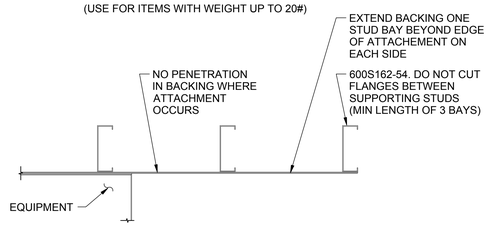

NOTES:
PROVIDE BACKING CONT AT ALL CABINETS, SHELVING, TACKBOARDS, WHITE-BOARDS, AND WALL AFFIXED EQUIPMENT, (MIN LENGTH OF 3 STUDS)

PLAN DETAIL A

TYPICAL EQUIPMENT BACKING DETAIL | 2

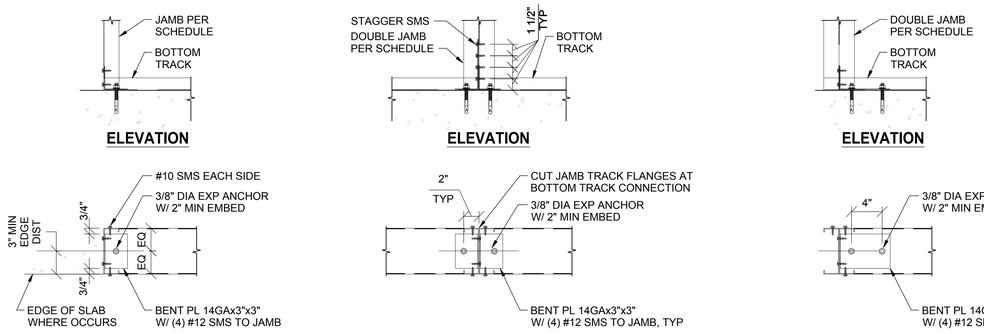

TYPICAL JAMB CONNECTIONS | 3

VENTURA COUNTY HEALTH CARE AGENCY

PUBLIC WORKS VENTURA COUNTY

ENGINEERING SERVICES

RASMUSSEN & ASSOCIATES
Architecture
Planning
Interiors
21 S. California Street
Fourth Floor
Ventura, California 93001
(805) 648-1234

REGISTERED PROFESSIONAL ENGINEER RICHARD R. LAND No. 2017 STRUCTURAL STATE OF CALIFORNIA

DATE: 09-19-2022
FOR BRANDOW & JOHNSTON, INC

EST. 1945
BRANDOW & JOHNSTON
STRUCTURAL•CIVIL ENGINEERS
700 S FLOWER ST #1200, LOS ANGELES, CA 90017
T: (213) 596-4500
WWW.BJSCE.COM
B&J PROJECT #: S21-0199

PROFESSIONAL SEALS

LICENSED ARCHITECT JAY LOMAGNO C-20080 STATE OF CALIFORNIA

PERMIT APPROVAL STAMP

REVIEWED IN ACCORDANCE WITH THE REQUIREMENTS OF T24, CCR
APPROVED
Department of Health Care Access and Information
FACILITIES DEVELOPMENT DIVISION
9/28/2022, 3:17:57 PM
H202495-56-00
Laura Baldrati

PERMIT NO OSHPD H202495-56-00

NO	REVISION	DATE
1	HCAI RESUBMITTAL	09/19/2022

PUBLIC WORKS PROJECT MANAGER

CONSULTANT PROJECT MANAGER
Jay Lomagno

DRAWN BY	CHECKED BY
R&A	JJL
CONSULTANT JOB NO	DATE
A000495	06/15/2022

PROJECT TITLE AND ADDRESS

VENTURA COUNTY MEDICAL CENTER PEDIATRIC UNIT

300 HILLMONT AVE
VENTURA, CA 93003

COUNTY SPEC NUMBER
CP21-04

COUNTY PROJECT NUMBER
P6T20009

COUNTY DWG NO | SHEET 33 OF 89

SHEET TITLE
TYPICAL METAL STUD DETAILS

SHEET NO
S-1.31

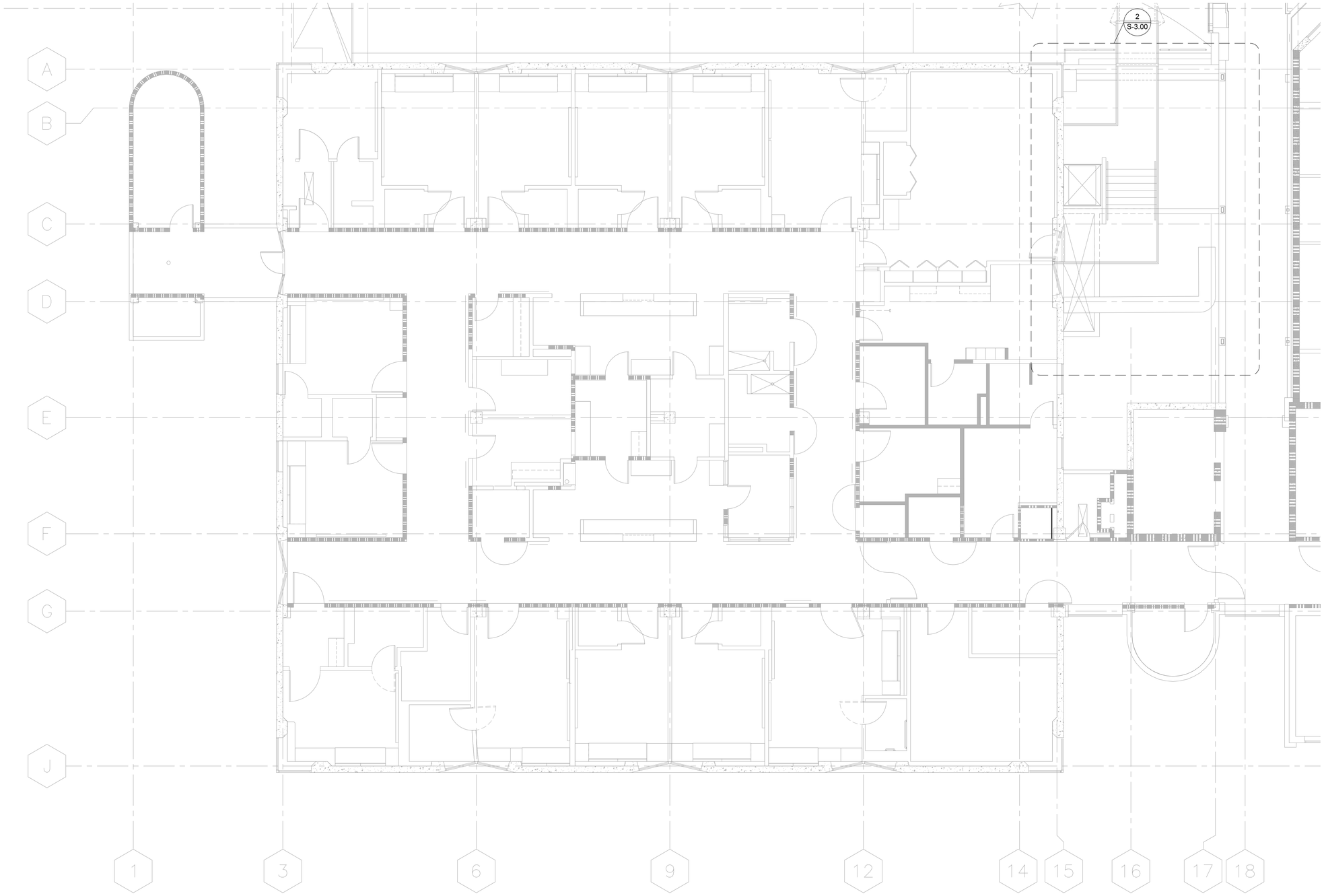

NORTH

FAINER WING - SECOND LEVEL FLOOR PLAN

SCALE: 3/16"=1'-0"

4

VENTURA COUNTY HEALTH CARE AGENCY

PUBLIC WORKS VENTURA COUNTY

ENGINEERING SERVICES

RASMUSSEN & ASSOCIATES
Architecture
Planning
Interiors
21 S. California Street
Fourth Floor
Ventura, California 93001
(805) 648-1234

REGISTERED PROFESSIONAL ENGINEER
EDWARD R. LAU
No. 2017
STRUCTURAL
STATE OF CALIFORNIA

DATE: 09-19-2022
FOR BRANDOW & JOHNSTON, INC

EST. 1945
BRANDOW & JOHNSTON
STRUCTURAL•CIVIL ENGINEERS
700 S FLOWER ST #1200, LOS ANGELES, CA 90017
T: (213) 596-4500 WWW.BJSCE.COM
B&J PROJECT #: S21-0199

PROFESSIONAL SEALS

LICENSED ARCHITECT
JAY LOMAGNO
C-21080
STATE OF CALIFORNIA

PERMIT APPROVAL STAMP

REVIEWED IN ACCORDANCE WITH THE REQUIREMENTS OF T24, CCR
APPROVED
Department of Health Care Access and Information
FACILITIES DEVELOPMENT DIVISION
9/28/2022, 3:17:57 PM
H202495-56-00
Laura Baldrati

PERMIT NO OSHPD H202495-56-00

NO	REVISION	DATE
1	HCAI RESUBMITTAL	09/19/2022

PUBLIC WORKS PROJECT MANAGER

CONSULTANT PROJECT MANAGER
Jay Lomagno

DRAWN BY R&A | CHECKED BY JJL

CONSULTANT JOB NO A000495 | DATE 06/15/2022

PROJECT TITLE AND ADDRESS

VENTURA COUNTY MEDICAL CENTER PEDIATRIC UNIT

300 HILLMONT AVE
VENTURA, CA 93003

COUNTY SPEC NUMBER
CP21-04

COUNTY PROJECT NUMBER
P6T20009

COUNTY DWG NO | SHEET 34 OF 89

SHEET TITLE
FAINER WING - SECOND LEVEL FLOOR PLAN

SHEET NO
S-2.00

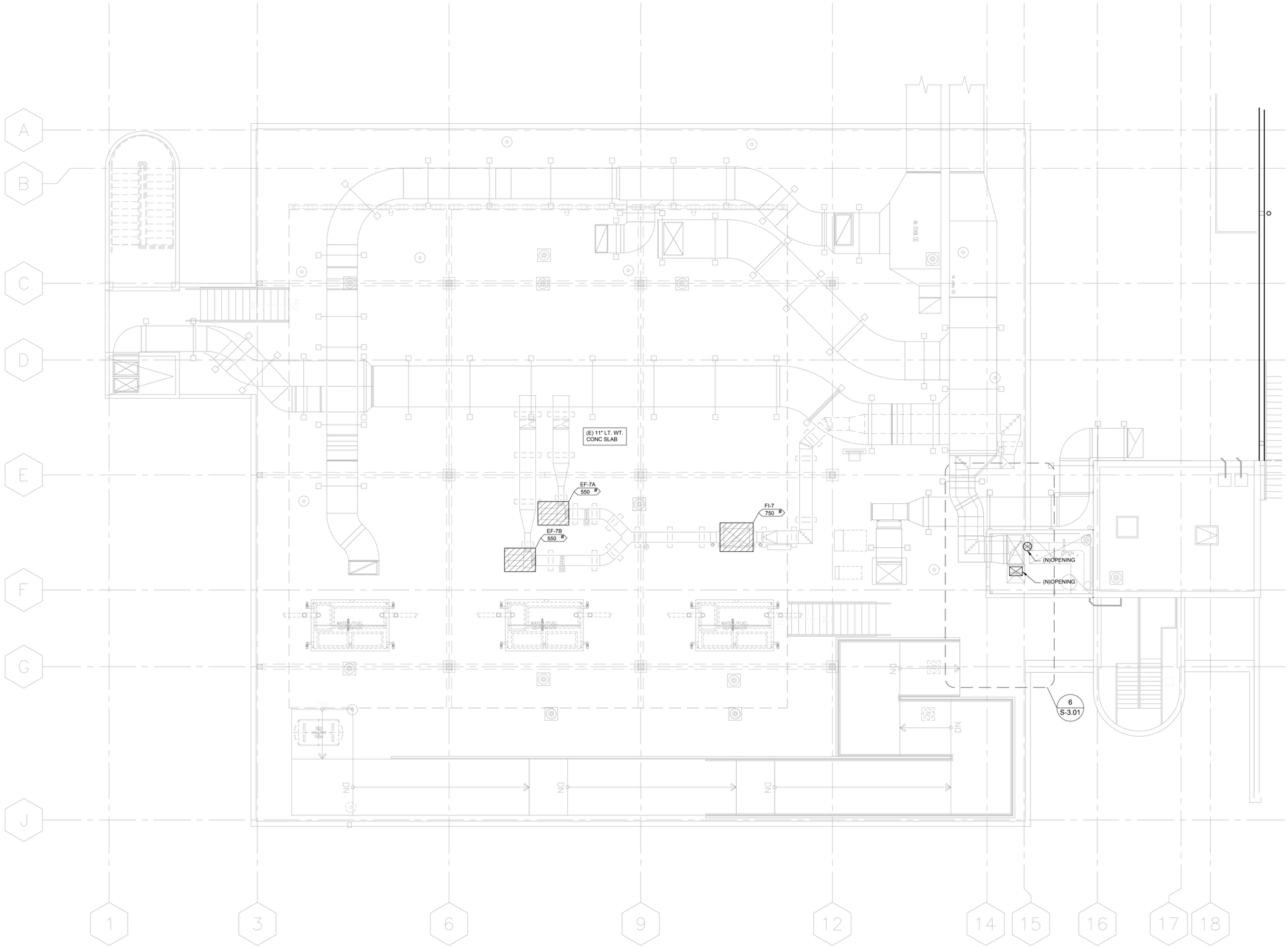

NOTES:

1. FULLY COORDINATE W/ ARCHITECTURAL & MEP DRAWINGS
2. XXX # INDICATES MAX OPERATING EQUIPMENT WEIGHT. SEE MEP DRAWINGS. REFER TO **9/S-3.01** FOR EQUIPMENT ANCHORAGE.

NORTH

FAINER WING - ROOF LEVEL FLOOR PLAN

SCALE: 3/16"=1'-0"

4

VENTURA COUNTY HEALTH CARE AGENCY

PUBLIC WORKS VENTURA COUNTY

ENGINEERING SERVICES

RASMUSSEN & ASSOCIATES
Architecture
Planning
Interiors
21 S. California Street
Fourth Floor
Ventura, California 93001
(805) 648-1234

REGISTERED PROFESSIONAL ENGINEER
EDWARD R. LAU
No. 2017
STRUCTURAL
STATE OF CALIFORNIA

DATE: 09-19-2022
FOR BRANDOW & JOHNSTON, INC

EST. 1945
BRANDOW & JOHNSTON
STRUCTURAL•CIVIL ENGINEERS
700 S FLOWER ST #1200, LOS ANGELES, CA 90017
T: (213) 596-4500 WWW.BJSCE.COM
B&J PROJECT #: S21-0199

PROFESSIONAL SEALS

LICENSED ARCHITECT
JAY LOMAGNO
C-20804
REGISTERED PROFESSIONAL ENGINEER
STATE OF CALIFORNIA

PERMIT APPROVAL STAMP

REVIEWED IN ACCORDANCE WITH THE REQUIREMENTS OF T.24, CCR
APPROVED
Department of Health Care Access and Information
FACILITIES DEVELOPMENT DIVISION
9/28/2022, 3:17:57 PM
H202495-56-00
Laura Baldrati

PERMIT NO OSHPD H202495-56-00

NO	REVISION	DATE
1	HCAI RESUBMITTAL	09/19/2022

PUBLIC WORKS PROJECT MANAGER

CONSULTANT PROJECT MANAGER
Jay Lomagno

DRAWN BY	CHECKED BY
R&A	JJL

CONSULTANT JOB NO	DATE
A000495	06/15/2022

PROJECT TITLE AND ADDRESS

VENTURA COUNTY MEDICAL CENTER PEDIATRIC UNIT

300 HILLMONT AVE
VENTURA, CA 93003

COUNTY SPEC NUMBER
CP21-04

COUNTY PROJECT NUMBER
P6T20009

COUNTY DWG NO

SHEET 35 OF 89

SHEET TITLE
FAINER WING - ROOF LEVEL FLOOR PLAN

SHEET NO
S-2.10

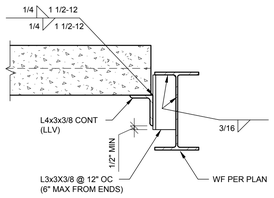

DETAIL — SCALE: 1 1/2"=1'-0" — 13

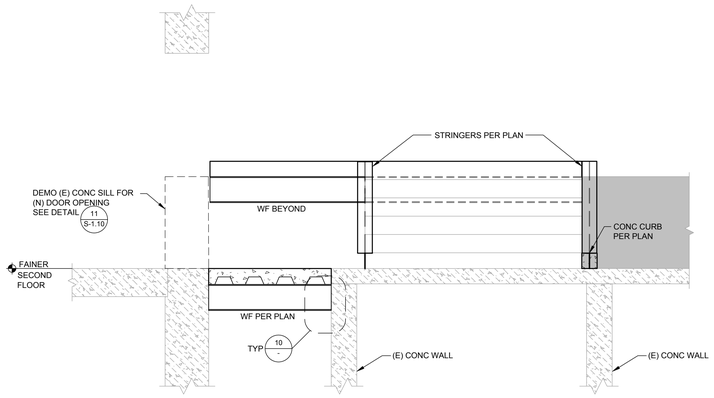

SECTION — SCALE: 1/2"=1'-0" — 5

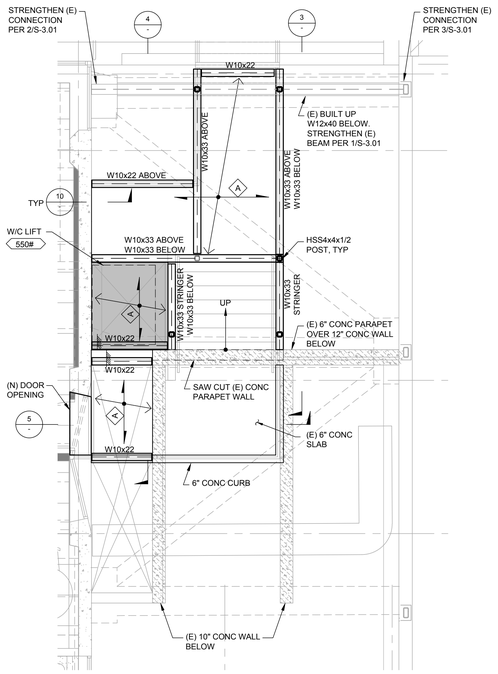

NOTES:

1. A — INDICATES DECK TYPE PER 5/S-1.20
   INDICATES DIRECTION OF DECK
2. PROVIDE 3/4" DIA SHEAR STUDS @ 12" OC MAX UNLESS A GRATER NUMBER IS SHOWN ON PLAN FOR ALL BEAMS AND GIRDERS WITH CONCRETE ABOVE THE FLANGE OF BEAM. REFER TO 14/S-1.20 FOR SHEAR STUD PLACEMENT.

ENLARGED PLAN — SCALE: 1/4"=1'-0" — 2

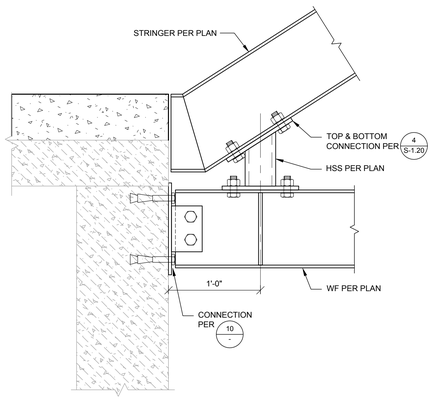

DETAIL — SCALE: 1 1/2"=1'-0" — 14

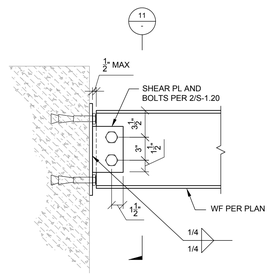

DETAIL — SCALE: 1 1/2"=1'-0" — 10

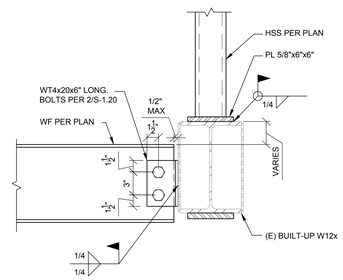

DETAIL — SCALE: 1 1/2"=1'-0" — 6

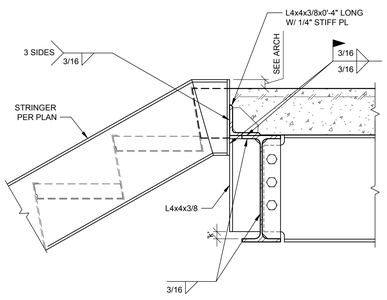

DETAIL — SCALE: 1 1/2"=1'-0" — 15

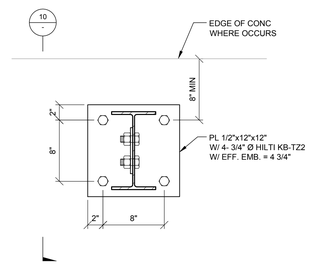

DETAIL — SCALE: 1 1/2"=1'-0" — 11

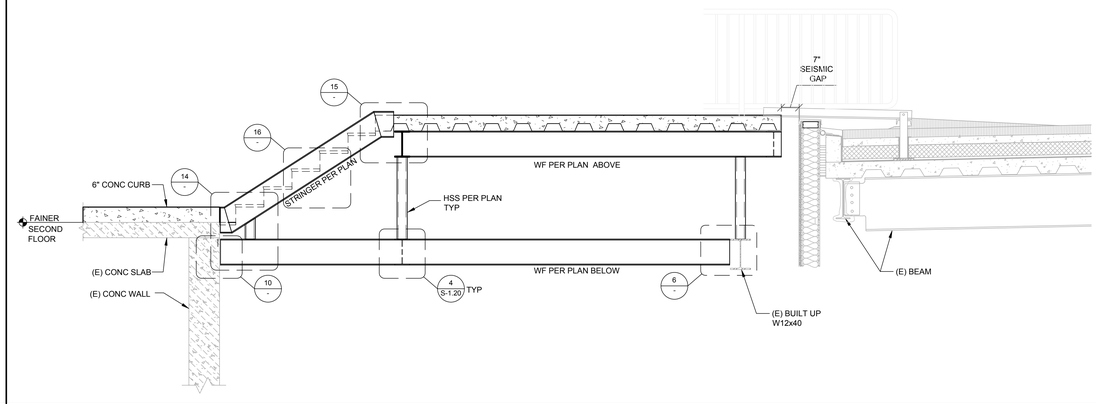

SECTION — SCALE: 1/2"=1'-0" — 3

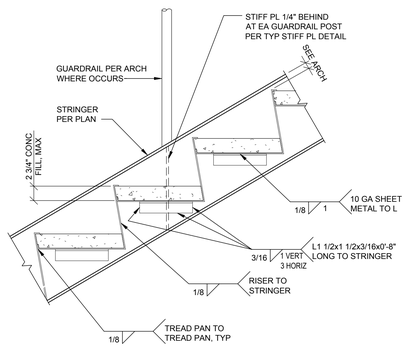

DETAIL — SCALE: 1 1/2"=1'-0" — 16

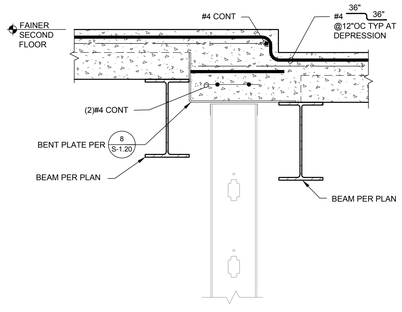

DETAIL — SCALE: 1 1/2"=1'-0" — 12

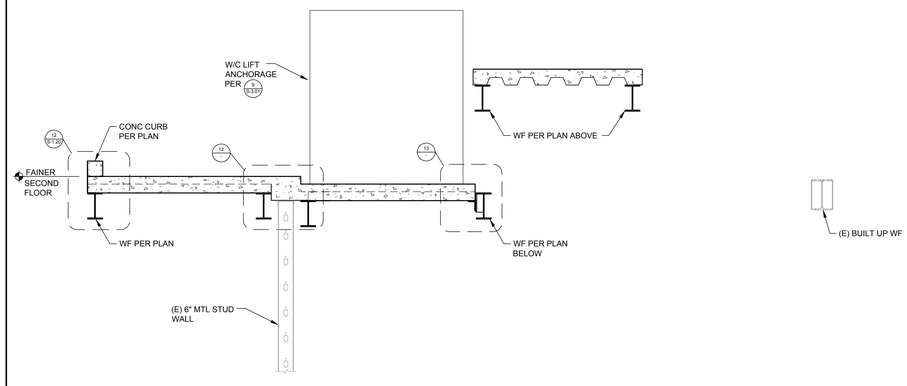

SECTION — SCALE: 1/2"=1'-0" — 4

VENTURA COUNTY HEALTH CARE AGENCY

PUBLIC WORKS VENTURA COUNTY

ENGINEERING SERVICES

RASMUSSEN & ASSOCIATES
Architecture
Planning
Interiors
21 S. California Street
Fourth Floor
Ventura, California 93001
(805) 648-1234

REGISTERED PROFESSIONAL ENGINEER — RONALD R. LAND — No. 21017 — STRUCTURAL — STATE OF CALIFORNIA

DATE: 09-19-2022
FOR BRANDOW & JOHNSTON, INC

EST. 1945
BRANDOW & JOHNSTON
STRUCTURAL•CIVIL ENGINEERS
700 S FLOWER ST #1200, LOS ANGELES, CA 90017
T: (213) 596-4500
WWW.BJSCE.COM
B&J PROJECT #: S21-0199

PROFESSIONAL SEALS

LICENSED ARCHITECT — JAY LOMAGNO — C-12080 — STATE OF CALIFORNIA

PERMIT APPROVAL STAMP

REVIEWED IN ACCORDANCE WITH THE REQUIREMENTS OF T24, CCR
APPROVED
Department of Health Care Access and Information
FACILITIES DEVELOPMENT DIVISION
9/28/2022, 3:17:57 PM
H202495-56-00
Laura Baldrati

PERMIT NO OSHPD H202495-56-00

NO	REVISION	DATE
1	HCAI RESUBMITTAL	09/19/2022

PUBLIC WORKS PROJECT MANAGER

CONSULTANT PROJECT MANAGER: Jay Lomagno

DRAWN BY	CHECKED BY
R&A	JJL
CONSULTANT JOB NO: A000495	DATE: 06/15/2022

PROJECT TITLE AND ADDRESS

VENTURA COUNTY MEDICAL CENTER PEDIATRIC UNIT

300 HILLMONT AVE
VENTURA, CA 93003

COUNTY SPEC NUMBER: CP21-04

COUNTY PROJECT NUMBER: P6T20009

COUNTY DWG NO — SHEET 36 OF 89

SHEET TITLE: SECTIONS AND DETAILS

SHEET NO **S-3.00**

ANCHORAGE SCHEDULE FOR EQUIPMENT				
EQUIPMENT TAG	LOCATION	MAX WEIGHT (LBS)	ANCHORAGE DETAIL	ANCHORS
EF-7A, EF-7B	ROOF	550	B	(2) 5/8" DIA HILTI KB-TZ2 SS304 ANCHORS (ICC-ESR 4266) W/ 3 1/4" MIN EFFECTIVE EMBEDMENT AT EACH SEISMIC ISOLATOR
F1-7	ROOF	750	A	(4) 1/2" DIA HILTI KB-TZ2 SS304 ANCHORS (ICC-ESR 4266) W/ 3 1/4" MIN EFFECTIVE EMBEDMENT
W/C LIFT	2ND LEVEL PEDS BRIDGE	550	10/-	

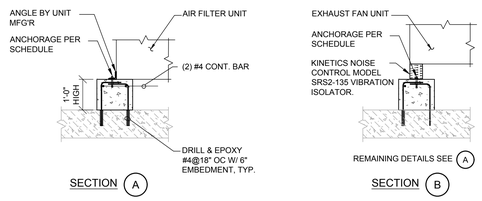

EQUIPMENT ANCHORAGE SCHEDULE AND DETAIL | 9

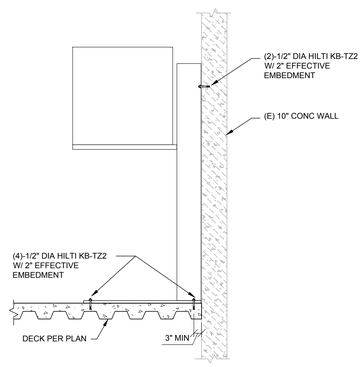

WHEELCHAIR (W/C) LIFT ANCHORAGE DETAIL | 10

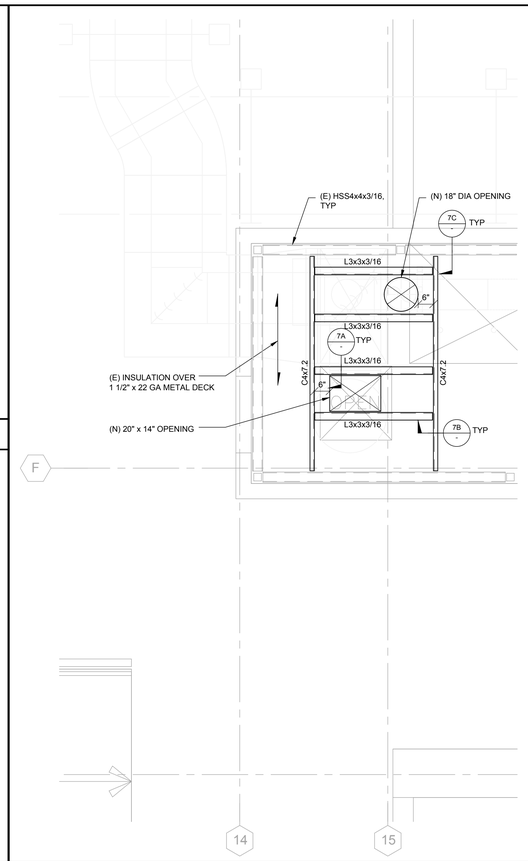

ENLARGED PLAN AT ROOF LEVEL | SCALE: 1/2"=1'-0" | 6

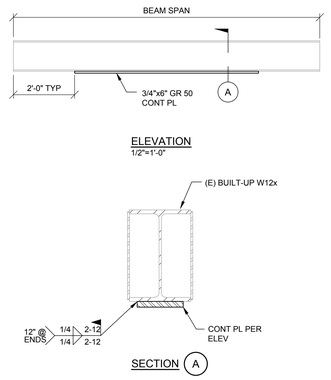

DETAIL | SCALE: 1 1/2"=1'-0" | 1

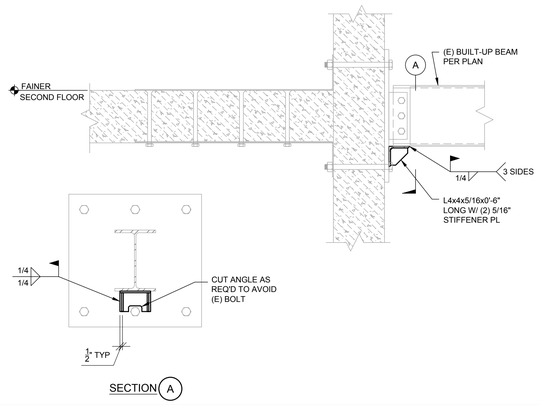

DETAIL | SCALE: 1"=2'-0"1'-0" | 2

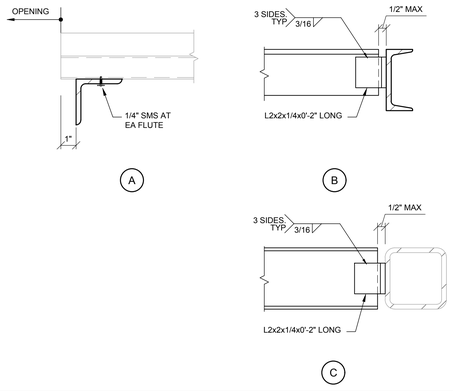

DETAIL | SCALE: 3"=1'-0" | 7

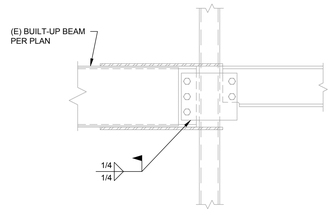

DETAIL | SCALE: 1"=2'-0"1'-0" | 3

VENTURA COUNTY HEALTH CARE AGENCY

PUBLIC VENTURA COUNTY WORKS

ENGINEERING SERVICES

RASMUSSEN & ASSOCIATES
Architecture
Planning
Interiors
21 S. California Street
Fourth Floor
Ventura, California 93001
(805) 648-1234

REGISTERED PROFESSIONAL ENGINEER DORAND R. LAND No. 2017 STRUCTURAL STATE OF CALIFORNIA

DATE: 09-19-2022
FOR BRANDOW & JOHNSTON, INC

EST. 1945
BRANDOW & JOHNSTON
STRUCTURAL•CIVIL ENGINEERS
700 S FLOWER ST #1200, LOS ANGELES, CA 90017
T: (213) 596-4500 WWW.BJSCE.COM
B&J PROJECT #: S21-0199

PROFESSIONAL SEALS

LICENSED ARCHITECT JAY LOMAGNO C-20801 STATE OF CALIFORNIA

PERMIT APPROVAL STAMP

REVIEWED IN ACCORDANCE WITH THE REQUIREMENTS OF T24, CCR
APPROVED
Department of Health Care Access and Information
FACILITIES DEVELOPMENT DIVISION
9/28/2022, 3:17:57 PM
H202495-56-00
Laura Baldrati

PERMIT NO OSHPD H202495-56-00

NO	REVISION	DATE
1	HCAI RESUBMITTAL	09/19/2022

PUBLIC WORKS PROJECT MANAGER

CONSULTANT PROJECT MANAGER
Jay Lomagno

DRAWN BY	CHECKED BY
R&A	JJL
CONSULTANT JOB NO: A000495	DATE: 06/15/2022

PROJECT TITLE AND ADDRESS

VENTURA COUNTY MEDICAL CENTER PEDIATRIC UNIT

300 HILLMONT AVE
VENTURA, CA 93003

COUNTY SPEC NUMBER
CP21-04

COUNTY PROJECT NUMBER
P6T20009

COUNTY DWG NO | SHEET 37 OF 89

SHEET TITLE
SECTIONS AND DETAILS

SHEET NO
S-3.01

EXHAUST FANS

UNIT TAG	DUTY	CFM	STATIC PRESSURE	FAN				MOTOR NAMEPLATE					SOUND SOURCES	SOUND POWER BY OCTAVE BANDS RE: 10-12 WATTS								WEIGHT (LBS)	TYPE	MANUFACTURER AND MODEL NO.	REMARKS
				OUTLET V	TIP SPEED	RPM	BHP	RPM	HP	V	HZ	PH		63 HZ	125 HZ	250 HZ	500 HZ	1K HZ	2K HZ	4K HZ	8K HZ				
EF 7A	AIRBORNE INFECTION ISOLATION ROOM EXHAUST	1,500	6.0 IN. W.C.	1,791 FPM	11,696 FPM	3723	2.17	1750	3	460	60	3	OUTLET	95	90	89	88	84	81	75	71	550	CENTRIFUGAL FAN	LOREN COOK COMPANY 120 CPS	FURNISH WITH TEFC INVERTER DUTY MOTOR, SHAFT GROUNDING RING, STEEL ACCESS DOOR, FLANGED INLET & OUTLET, SEISMIC ISOL. AND RAILS. OSP-0102-10. ESSENTIAL ELECTRICAL.
													INLET	89	92	91	89	84	79	75	73				
EF 7B	AIRBORNE INFECTION ISOLATION ROOM EXHAUST	1,500	6.0 IN. W.C.	1,791 FPM	11,696 FPM	3723	2.17	1750	3	460	60	3	OUTLET	95	90	89	88	84	81	75	71	550	CENTRIFUGAL FAN	LOREN COOK COMPANY 120 CPS	FURNISH WITH TEFC INVERTER DUTY MOTOR, SHAFT GROUNDING RING, STEEL ACCESS DOOR, FLANGED INLET & OUTLET, SEISMIC ISOL. AND RAILS. OSP-0102-10. ESSENTIAL ELECTRICAL.
													INLET	89	92	91	89	84	79	75	73				

VARIABLE FREQUENCY DRIVES

UNIT TAG	DUTY		MOTOR DATA					DRIVE DATA					WEIGHT (LBS)	MANUFACTURER AND MODEL NO.	REMARKS
			HP	FLA	V	HZ	PH	HP	FLA	V	HZ	PH			
VFD 7A	EXHAUST FAN EF-7A		3	4.8	460	60	3	3	4.8	460	60	3	150	ABB ACH580-BCR-04A8-4+B058	FURNISH WITH NEMA 3R WALL-MOUNT ENCLOSURE, CONTROL INTERFACE, BYPASS, CIRCUIT BREAKER DISCONNECT. OSP-0575. ESSENTIAL ELECTRICAL.
VFD 7B	EXHAUST FAN EF-7B		3	4.8	460	60	3	3	4.8	460	60	3	150	ABB ACH580-BCR-04A8-4+B058	FURNISH WITH NEMA 3R WALL-MOUNT ENCLOSURE, CONTROL INTERFACE, BYPASS, CIRCUIT BREAKER DISCONNECT. OSP-0575. ESSENTIAL ELECTRICAL.

COMBINATION FIRE/SMOKE DAMPERS

UNIT TAG	DUTY	FIRE RATING	LEAKAGE RATING	DAMPER AREA (MAX)	ACTUATOR MOTOR				WEIGHT (LBS)	MANUFACTURER AND MODEL NO.	REMARKS
					POWER	V	HZ	PH			
CFSD 2-S1	SECOND FLOOR SUPPLY DUCT CEILING TYPE	1 HOUR TUNNEL CORR.	8 CFM/SF @4.0 IN. W.C.	4.0 SF	19 WATTS	120	60	1	-	POTTORFF FSD-171-OP W/ BELIMO FSNF120	FURNISH WITH EXTERNALLY MOUNTED ACTUATOR. ESSENTIAL ELECTRICAL.
CFSD 2-S2	SECOND FLOOR SUPPLY DUCT WALL TYPE	1-1/2 HOUR	8 CFM/SF @4.0 IN. W.C.	12.0 SF	19 WATTS	120	60	1	-	POTTORFF FSD-141 W/ BELIMO FSNF120	FURNISH WITH EXTERNALLY MOUNTED ACTUATOR. ESSENTIAL ELECTRICAL.
CFSD 2-S3	SECOND FLOOR SUPPLY DUCT WALL TYPE	1-1/2 HOUR	8 CFM/SF @4.0 IN. W.C.	12.0 SF	19 WATTS	120	60	1	-	POTTORFF FSD-141 W/ BELIMO FSNF120	FURNISH WITH EXTERNALLY MOUNTED ACTUATOR. ESSENTIAL ELECTRICAL.
CFSD 2-S4	SECOND FLOOR SUPPLY DUCT WALL TYPE	1-1/2 HOUR	8 CFM/SF @4.0 IN. W.C.	12.0 SF	19 WATTS	120	60	1	-	POTTORFF FSD-141 W/ BELIMO FSNF120	FURNISH WITH EXTERNALLY MOUNTED ACTUATOR. ESSENTIAL ELECTRICAL.
CFSD 2-S5	SECOND FLOOR SUPPLY DUCT WALL TYPE	1-1/2 HOUR	8 CFM/SF @4.0 IN. W.C.	12.0 SF	19 WATTS	120	60	1	-	POTTORFF FSD-141 W/ BELIMO FSNF120	FURNISH WITH EXTERNALLY MOUNTED ACTUATOR. ESSENTIAL ELECTRICAL.
CFSD 2-R1	SECOND FLOOR RETURN DUCT CEILING TYPE	1 HOUR TUNNEL CORR.	8 CFM/SF @4.0 IN. W.C.	4.0 SF	19 WATTS	120	60	1	-	POTTORFF FSD-171-OP W/ BELIMO FSNF120	FURNISH WITH EXTERNALLY MOUNTED ACTUATOR. ESSENTIAL ELECTRICAL.
CFSD 2-R2	SECOND FLOOR RETURN DUCT CEILING TYPE	1 HOUR TUNNEL CORR.	8 CFM/SF @4.0 IN. W.C.	4.0 SF	19 WATTS	120	60	1	-	POTTORFF FSD-171-OP W/ BELIMO FSNF120	FURNISH WITH EXTERNALLY MOUNTED ACTUATOR. ESSENTIAL ELECTRICAL.
CFSD 2-R3	SECOND FLOOR RETURN DUCT CEILING TYPE	1 HOUR TUNNEL CORR.	8 CFM/SF @4.0 IN. W.C.	4.0 SF	19 WATTS	120	60	1	-	POTTORFF FSD-171-OP W/ BELIMO FSNF120	FURNISH WITH EXTERNALLY MOUNTED ACTUATOR. ESSENTIAL ELECTRICAL.
CFSD 2-R4	SECOND FLOOR RETURN DUCT WALL TYPE	1-1/2 HOUR	8 CFM/SF @4.0 IN. W.C.	12.0 SF	19 WATTS	120	60	1	-	POTTORFF FSD-141 W/ BELIMO FSNF120	FURNISH WITH EXTERNALLY MOUNTED ACTUATOR. ESSENTIAL ELECTRICAL.
CFSD 2-E1	SECOND FLOOR EXHAUST DUCT WALL TYPE	1-1/2 HOUR	8 CFM/SF @4.0 IN. W.C.	12.0 SF	19 WATTS	120	60	1	-	POTTORFF FSD-141 W/ BELIMO FSNF120	FURNISH WITH EXTERNALLY MOUNTED ACTUATOR. ESSENTIAL ELECTRICAL.
CFSD 2-E2	SECOND FLOOR EXHAUST DUCT WALL TYPE	1-1/2 HOUR	8 CFM/SF @4.0 IN. W.C.	12.0 SF	19 WATTS	120	60	1	-	POTTORFF FSD-141 W/ BELIMO FSNF120	FURNISH WITH EXTERNALLY MOUNTED ACTUATOR. ESSENTIAL ELECTRICAL.
CFSD 2-E3	SECOND FLOOR EXHAUST DUCT WALL TYPE	1-1/2 HOUR	8 CFM/SF @4.0 IN. W.C.	12.0 SF	19 WATTS	120	60	1	-	POTTORFF FSD-141 W/ BELIMO FSNF120	FURNISH WITH EXTERNALLY MOUNTED ACTUATOR. ESSENTIAL ELECTRICAL.

AIR FLOW METERS

UNIT TAG	DUTY	CFM	DUCT SIZE	VELOCITY	QTY. OF PROBES	PROBE LENGTH	QTY. OF SENSORS	NAMEPLATE				WEIGHT (LBS)	MANUFACTURER AND MODEL NO.	REMARKS
								V	HZ	PH	VA			
AFM R-1	EF-7A & 7B EXHAUST SYSTEM	1,500	16"Ø	1,074 FPM	2	16"	2/PROBE	24	60	1	14	<10	EBTRON GTC116-P	FURNISH WITH NEMA 3R ENCLOSURE
AFM 2-1	AIRBORNE INFECTION ISOLATION ROOM 2C13	655	12x12	655 FPM	1	12"	2/PROBE	24	60	1	13	<10	EBTRON GTC116-P	FURNISH WITH NEMA 1 ENCLOSURE.
AFM 2-2	AIRBORNE INFECTION ISOLATION ROOM 2C20	530	12x10	636 FPM	1	12"	2/PROBE	24	60	1	13	<10	EBTRON GTC116-P	FURNISH WITH NEMA 1 ENCLOSURE.

AIRBORNE INFECTION ISOLATION ROOM PRESSURE MONITORS

UNIT TAG	DUTY	PRESSURE RANGE	ACCURACY	NAMEPLATE				WEIGHT (LBS)	MANUFACTURER AND MODEL NO.	REMARKS
				V	HZ	PH	PWR			
RPM 2A	AIIR PEDS 2C13	+/- 0.50 IN. W.C.	+/- 0.5% FULL SCALE	24	60	1	5W	2	SETRA SYSTEMS SRPM	FURNISH WITH (2) ROOM PRESSURE SNUBBERS, DOOR SWITCH, REMOTE ANNUNCIATOR, 1/4" NYLON TUBING.
RPM 2B	AIIR PEDS 2C20	+/- 0.50 IN. W.C.	+/- 0.5% FULL SCALE	24	60	1	5W	2	SETRA SYSTEMS SRPM	FURNISH WITH (2) ROOM PRESSURE SNUBBERS, DOOR SWITCH, REMOTE ANNUNCIATOR, 1/4" NYLON TUBING.

CONTROL PANEL

UNIT TAG	DUTY	EQUIPMENT SERVED	NAMEPLATE				WEIGHT (LBS)	MANUFACTURER AND MODEL NO.	REMARKS
			V	HZ	PH	VA			
CP HR1	AIRBORNE INFECT. ISOLATION ROOMS EXHAUST SYSTEM	EF-7A, EF-7B, VFD-7A, VFD-7B	120	60	1	280	180	ALERTON (CLIMATEC) A48H36BLP-NEMA 4	OSP-0055, ESSENTIAL ELECTRICAL.
CP H21	AIRBORNE INFECTION ISOLATION ROOMS		120	60	1	280	51	ALERTON (CLIMATEC) A24N24ALP-NEMA 1	OSP-0055, ESSENTIAL ELECTRICAL.

REHEAT COILS

UNIT TAG		CFM	SIZE	FV	MBH	EDB	EWB	LDB	LWB	EWT	LWT	GPM	ROWS	APD	WPD	FPF	WEIGHT (LBS)	BRANCH PIPE SIZE	CONTROL VALVE ARRANGEMENT	MANUFACTURER AND MODEL NO.	
HC 2A		900	12Wx13L	831	36.9	52.0°F	-	90.0°F	-	160.0°F	140°F	3.69	2	0.32" W.C.	3.7' W.C.	120	<20	3/4"	2-WAY	TRANE TYPE T	
HC 2B		650	12Wx12L	650	26.7	52.0°F	-	90.0°F	-	160.0°F	140°F	2.67	2	0.25" W.C.	2.9' W.C.	120	<20	3/4"	2-WAY	TRANE TYPE T	
HC 2C		600	12Wx12L	600	24.6	52.0°F	-	90.0°F	-	160.0°F	140°F	2.46	2	0.23" W.C.	2.7' W.C.	120	<20	3/4"	2-WAY	TRANE TYPE T	
HC 2D		1,510	12Wx22L	824	62.0	52.0°F	-	90.0°F	-	160.0°F	140°F	6.20	2	0.31" W.C.	4.6' W.C.	120	35	1"	2-WAY	TRANE TYPE T	
HC 2E		150	6Wx9L	400	6.2	52.0°F	-	90.0°F	-	160.0°F	140°F	0.62	2	0.19" W.C.	1.8' W.C.	120	35	1"	2-WAY	TRANE TYPE T	

AIR OUTLETS AND INLETS

UNIT TAG	DESCRIPTION	PANEL SIZE	MANUFACTURER AND MODEL NO.
S1	PERFORATED FACE LAY-IN MOUNTING	24x24	ANEMOSTAT QCP-L
S2	PERFORATED FACE LAY-IN MOUNTING	12x24	ANEMOSTAT QCP-L
S3	PERFORATED FACE SURFACE MOUNTING	-	ANEMOSTAT QCP-S
R1	PERFORATED FACE LAY-IN MOUNTING	24x24	ANEMOSTAT 3PD
R2	PERFORATED FACE LAY-IN MOUNTING	12x24	ANEMOSTAT 3PD
R3	PERFORATED FACE SURFACE MOUNTING	-	ANEMOSTAT QCPR-S
E1	PERFORATED FACE LAY-IN MOUNTING	24x24	ANEMOSTAT 3PD
E3	PERFORATED FACE SURFACE MOUNTING	-	ANEMOSTAT QCPR-S
E4	LOUVERED FACE WALL MOUNTING	-	ANEMOSTAT

GENERAL NOTATION

1. INDICATES RECTANGULAR SUPPLY AIR DIFFUSER (4-WAY BLOW UNLESS OTHERWISE NOTED).
2. INDICATES RECTANGULAR RETURN AIR REGISTER.
3. INDICATES RECTANGULAR EXHAUST AIR REGISTER.
4. INDICATES SIDEWALL REGISTER OR GRILLE.
5. INDICATES LINEAR AIR DISTRIBUTION.
6. FOR DUCT CONNECTION TO AIR DISTRIBUTION SEE 17/M5.1, 18/M5.1, 19/M5.1 AND 27/M5.1
7. INDICATES EXISTING RECTANGULAR SUPPLY AIR DIFFUSER.
8. INDICATES EXISTING RECTANGULAR RETURN AIR REGISTER OR GRILLE.
9. INDICATES EXISTING RECTANGULAR EXHAUST AIR REGISTER OR GRILLE.
10. INDICATES EXISTING SIDEWALL REGISTER OR GRILLE.
11. INDICATES EXISTING LINEAR AIR DISTRIBUTION.

S1 / 120 / 6x6 / 2-WAY
- S = SUPPLY
- R = RETURN
- E = EXHAUST
- T = TRANSFER
- S1 — ITEM NUMBER
- 120 — CFM
- 6x6 — NECK SIZE
- 2-WAY — BLOW

ES / 200
- E = EXISTING
- S = SUPPLY
- R = RETURN
- E = EXHAUST
- T = TRANSFER
- 200 — REBALANCE EXISTING AIR DISTRIBUTION DEVICE TO INDICATED AIR QUANTITY

18 SEISMIC NOTES

PIPES, DUCTS, AND CONDUITS SHALL BE SUPPORTED AND BRACED PER HCAI PRE-APPROVAL NO. OPM-0043-13, MASON INDUSTRIES, INC. 'SEISMIC RESTRAINT COMPONENTS FOR SUSPENDED UTILITIES'. A COPY OF THE HCAI PRE-APPROVED DOCUMENTS SHALL BE AT THE JOB SITE AT ALL TIMES. INSTALLATION OF THIS EQUIPMENT MUST BE DONE IN STRICT ACCORDANCE WITH THE PRE-APPROVED DOCUMENTS.

LAYOUT DRAWINGS, SHOWING THE BRACING/SUPPORT LOCATIONS AND REFERENCES TO DETAILS FROM THE RELEVANT HCAI PRE-APPROVALS FOR PIPING/DUCTS/CONDUITS EXCEPT FIRE SPRINKLERS, SHALL BE SUBMITTED FOR USE BY THE IOR AND OFFICE FIELD STAFF. THE LAYOUT DRAWINGS SHALL BE REVIEWED AND ACCEPTED BY THE AOR AND EOR (SE AND/OR ME/EE) PRIOR TO START OF INSTALLATION OF THE BRACING/SUPPORT. IOR SHALL ENSURE THE ABOVE REQUIREMENTS ARE SATISFIED.

ANCHORAGE AND SUPPORTS OF ALL EQUIPMENT TO BE INSTALLED AS A PART OF THIS PROJECT SHALL BE DETAILED ON CONSTRUCTION DOCUMENTS, EXCEPT THOSE EXEMPT BY 2019 CBC SECTION 1617A.1.18. EQUIPMENT SUPPORTS AND ANCHORAGE SHALL BE APPROVED BY THE APPROPRIATE DESIGN PROFESSIONAL OF RECORD AND HCAI AS PART OF FIELD REVIEWS/OBSERVATIONS. THE INSPECTOR OF RECORD (IOR) SHALL ASSURE THAT THE ABOVE REQUIREMENTS ARE ENFORCED.

EXPANSION ANCHORS FOR USE IN CONCRETE IN DRY LOCATIONS SHALL BE HILTI KWIK BOLT TZ2, ZINC COATED, CARBON STEEL ANCHORS. EXPANSION ANCHORS FOR USE IN CONCRETE IN DAMP AND WET LOCATIONS SHALL BE HILTI KWIK BOLT TZ2 STAINLESS STEEL ANCHORS. EXPANSION ANCHORS FOR USE IN GROUT FILLED MASONRY IN DRY LOCATIONS SHALL BE HILTI KWIK BOLT TZ CARBON STEEL MASONRY ANCHORS. EXPANSION ANCHORS FOR USE IN GROUT FILLED MASONRY IN DAMP AND WET LOCATIONS SHALL BE HILTI KWIK BOLT TZ STAINLESS STEEL MASONRY ANCHORS. PROVIDE ANCHORS OF DIAMETER AND MINIMUM EMBEDMENT INDICATED. DRY LOCATIONS ARE DEFINED AS LOCATIONS NOT NORMALLY SUBJECT TO DAMPNESS OR WETNESS. DAMP LOCATIONS ARE DEFINED AS PARTIALLY PROTECTED LOCATIONS UNDER CANOPIES, MARQUEES, ROOFED PORCHES, AND LIKE LOCATIONS AND INTERIOR LOCATIONS SUBJECT TO MODERATE DEGREES OF MOISTURE, SUCH AS SOME BASEMENTS. WET LOCATIONS ARE DEFINED AS INSTALLATIONS UNDERGROUND OR IN CONCRETE SLABS OR MASONRY IN DIRECT CONTACT WITH THE EARTH, LOCATIONS SUBJECT TO SATURATION WITH WATER OR OTHER LIQUIDS, AND LOCATIONS EXPOSED TO WEATHER AND UNPROTECTED.

PROOF LOAD TEST FOR WEDGE TYPE ANCHOR BOLTS: WHERE ANCHOR BOLTS OF THE WEDGE EXPANSION TYPE ARE LOADED IN PULLOUT OR SHEAR, 50% OF THE BOLTS (ALTERNATE BOLTS IN ANY GROUP ARRANGEMENT) SHALL BE PROOF TESTED AT LEAST 24 HOURS AFTER INSTALLATION IN THE PRESENCE OF PROJECT INSPECTOR TO THE TEST VALUES LISTED FOR THE PARTICULAR ANCHOR. IF ANY BOLTS FAIL THE PROOF LOAD TEST, TEST ALL ANCHOR BOLTS OF THE SAME TYPE, INSTALLED BY THE SAME TRADE, AND NOT PREVIOUSLY TESTED, UNTIL 20 CONSECUTIVE ANCHORS PASS, THEN RESUME INITIAL TEST FREQUENCY. ANCHORS SHALL BE TESTED WITH A CALIBRATED TORQUE WRENCH AND MUST ATTAIN SPECIFIED TORQUE WITHIN 1/2 TURN OF THE NUT.

TEST: TORQUE

BOLT DIAMETER (INCHES):	3/8	1/2	5/8	3/4
KB-TZ2 CONCRETE TORQUE VALUE (FT-LBS) ESR-4266 CARBON STEEL/STAINLESS STEEL:	30/30	50/40	40/60	110/110
KB-TZ2 GROUT FILLED MASONRY TORQUE VALUE (FT-LBS) ESR-4561 CARBON STL./STAINLESS STL.:	15/15	25/25	30/35	50/50

WHEN INSTALLING DRILLED-IN ANCHORS IN EXISTING NON-PRESTRESSED REINFORCED CONCRETE, USE CARE AND CAUTION TO AVOID CUTTING OR DAMAGING THE EXISTING REINFORCING BARS. MAINTAIN A MINIMUM CLEARANCE OF ONE INCH BETWEEN THE REINFORCEMENT AND THE DRILLED-IN ANCHOR.

LEGEND

SYMBOL	ABBREVIATION	DESCRIPTION
HHWS	HHWS	HEATING HOT WATER SUPPLY
HHWR	HHWR	HEATING HOT WATER RETURN
MPS	MPS	MEDIUM PRESSURE STEAM
LPS	LPS	LOW PRESSURE STEAM
MPC	MPC	MEDIUM PRESSURE CONDENSATE
LPC	LPC	LOW PRESSURE CONDENSATE
D	D	INDIRECT DRAIN
		EXISTING PIPING TO BE REMOVED
	GV	GATE VALVE
	BV	BALL VALVE
		PIPE TURNS DOWN
		PIPE TURNS UP
		DIRECTION OF FLOW
OR	SA	SUPPLY AIR DUCT SECTION
OR	RA	RETURN AIR DUCT SECTION
OR	EA	EXHAUST AIR DUCT SECTION
OR		FLEXIBLE DUCT
		FLEXIBLE DUCT CONNECTION
		TURNING VANES
	FLFD	FUSIBLE LINK FIRE DAMPER
	MVD	MANUAL VOLUME DAMPER
	CFSD	COMBINATION FIRE/SMOKE DAMPER
		REMOTE DAMPER OPERATOR
	CRD	CEILING RADIATION DAMPER
		AIRFLOW DIRECTION
		DOOR LOUVER
T RHC-1		ROOM THERMOSTAT/SENSOR (NO.) AT +48"
H RM XXXX		ROOM HUMIDITY SENSOR(NO.) AT +48"
T RHC-1		EXISTING ROOM T'STAT/SENSOR (ZONE NO.)
H HU-1		EXISTING ROOM H'STAT/SENSOR (HUMID. NO.)
		EXISTING DUCTWORK
		EXISTING FLEXIBLE DUCT
		EXISTING DUCTWORK TO BE REMOVED
		EXISTING FLEXIBLE DUCT TO BE REMOVED
OR		PIPE OR DUCT CAP
	POC	POINT OF CONNECTION
1		NUMBERED NOTES
X X		EXISTING FIXTURE/EQUIPMENT TAG
	TYP. OR (TYP)	TYPICAL
	E OR (E)	PREFIX INDICATING EXISTING

19 KEY PLAN

NTS

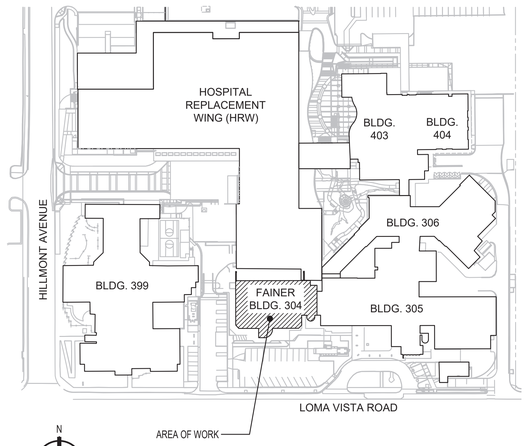

SEE DRAWING M3.1 FOR ADDITIONAL EQUIPMENT SCHEDULES.

VENTURA COUNTY HEALTH CARE AGENCY

PUBLIC WORKS VENTURA COUNTY

ENGINEERING SERVICES

RASMUSSEN & ASSOCIATES
Architecture
Planning
Interiors
21 S. California Street
Fourth Floor
Ventura, California 93001
(805) 648-1234

IRJ ENGINEERS, INC.
MECHANICAL & ELECTRICAL ENGINEERS
4517 MARKET STREET, SUITE 1B VENTURA, CALIFORNIA 93003
(805) 642-2355

FOR PLAN REVIEW ONLY

PROFESSIONAL SEALS

PERMIT APPROVAL STAMP

REVIEWED IN ACCORDANCE WITH THE REQUIREMENTS OF T24, CCR
APPROVED
Department of Health Care Access and Information
FACILITIES DEVELOPMENT DIVISION
9/28/2022, 3:17:57 PM
H202495-56-00
Laura Baldrati

PERMIT NO HCAI #H202495-56-00

NO	REVISION	DATE

PUBLIC WORKS PROJECT MANAGER

CONSULTANT PROJECT MANAGER Jay Lomagno

DRAWN BY | CHECKED BY

CONSULTANT JOB NO A000495 | DATE 06/15/2022

PROJECT TITLE AND ADDRESS

VENTURA COUNTY MEDICAL CENTER PEDIATRIC UNIT

300 HILLMONT AVE
VENTURA, CA 93003

COUNTY SPEC NUMBER CP21-04

COUNTY PROJECT NUMBER P6T20009

COUNTY DWG NO | SHEET 38 OF 89

SHEET TITLE

LEGEND, SCHEDULES, NOTES, KEY PLAN

SHEET NO M1.1

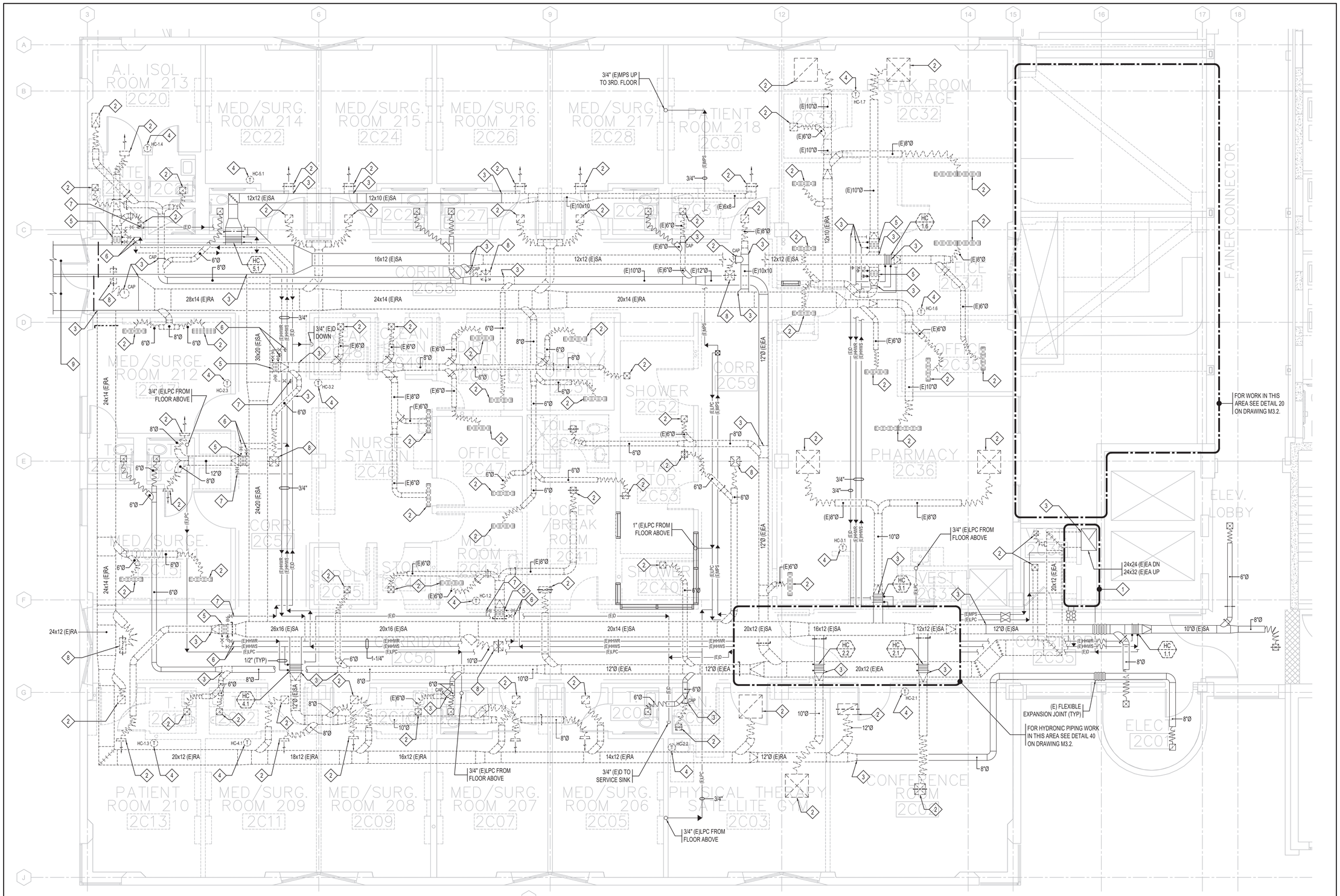

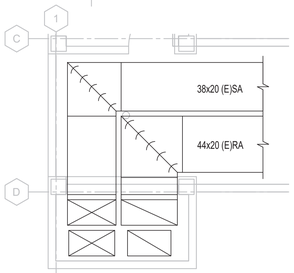

INSET "A" SCALE 1/4" = 1' - 0"

40 SECOND FLOOR HVAC DEMOLITION PLAN

SCALE 1/4" = 1' - 0"

NUMBERED NOTES:

(THIS DRAWING ONLY)

1. FOR PIPING MODIFICATIONS IN THIS AREA SEE DETAIL 38 ON DRAWING M3.2.
2. DEMOLISH EXISTING DIFFUSER/REGISTER.
3. DEMOLISH EXISTING BRANCH DUCTWORK. POINT OF CONNECTION FOR THIS WORK OR CAP WHERE SHOWN.
4. DEMOLISH EXISTING THERMOSTAT AND PNEUMATIC TUBING. CAP TUBING AT MAIN.
5. DEMOLISH EXISTING REHEAT COIL.
6. DEMOLISH EXISTING HHWS & HHWR PIPING. POINT OF CONNECTION FOR THIS WORK OR CAP WHERE SHOWN.
7. DEMOLISH EXISTING DRAIN PIPING. POINT OF CONNECTION FOR THIS WORK OR CAP WHERE SHOWN.
8. DEMOLISH EXISTING DIFFUSER/REGISTER. PATCH CEILING.
9. FOR CONTINUATION SEE INSET "A" ON THIS DRAWING.

VENTURA COUNTY HEALTH CARE AGENCY

PUBLIC VENTURA COUNTY WORKS

ENGINEERING SERVICES

RASMUSSEN & ASSOCIATES
Architecture
Planning
Interiors
21 S. California Street
Fourth Floor
Ventura, California 93001
(805) 648-1234

IRJ ENGINEERS, INC.
MECHANICAL & ELECTRICAL ENGINEERS
4517 MARKET STREET, SUITE 1B VENTURA, CALIFORNIA 93003
(805) 642-2355

JOB No. 2027-00

FOR PLAN REVIEW ONLY

PROFESSIONAL SEALS

PERMIT APPROVAL STAMP

REVIEWED IN ACCORDANCE WITH THE REQUIREMENTS OF T24, CCR
APPROVED
Department of Health Care Access and Information
FACILITIES DEVELOPMENT DIVISION
9/28/2022, 3:17:57 PM
H202495-56-00
Laura Baldrati

PERMIT NO HCAI #H202495-56-00

NO	REVISION	DATE
△		

PUBLIC WORKS PROJECT MANAGER

CONSULTANT PROJECT MANAGER
Jay Lomagno

DRAWN BY | CHECKED BY

CONSULTANT JOB NO A000495 | DATE 06/15/2022

PROJECT TITLE AND ADDRESS

VENTURA COUNTY MEDICAL CENTER PEDIATRIC UNIT

300 HILLMONT AVE
VENTURA, CA 93003

COUNTY SPEC NUMBER CP21-04

COUNTY PROJECT NUMBER P6T20009

COUNTY DWG NO | SHEET 39 OF 89

SHEET TITLE

SECOND FLOOR HVAC DEMOLITION PLAN

SHEET NO M2.1

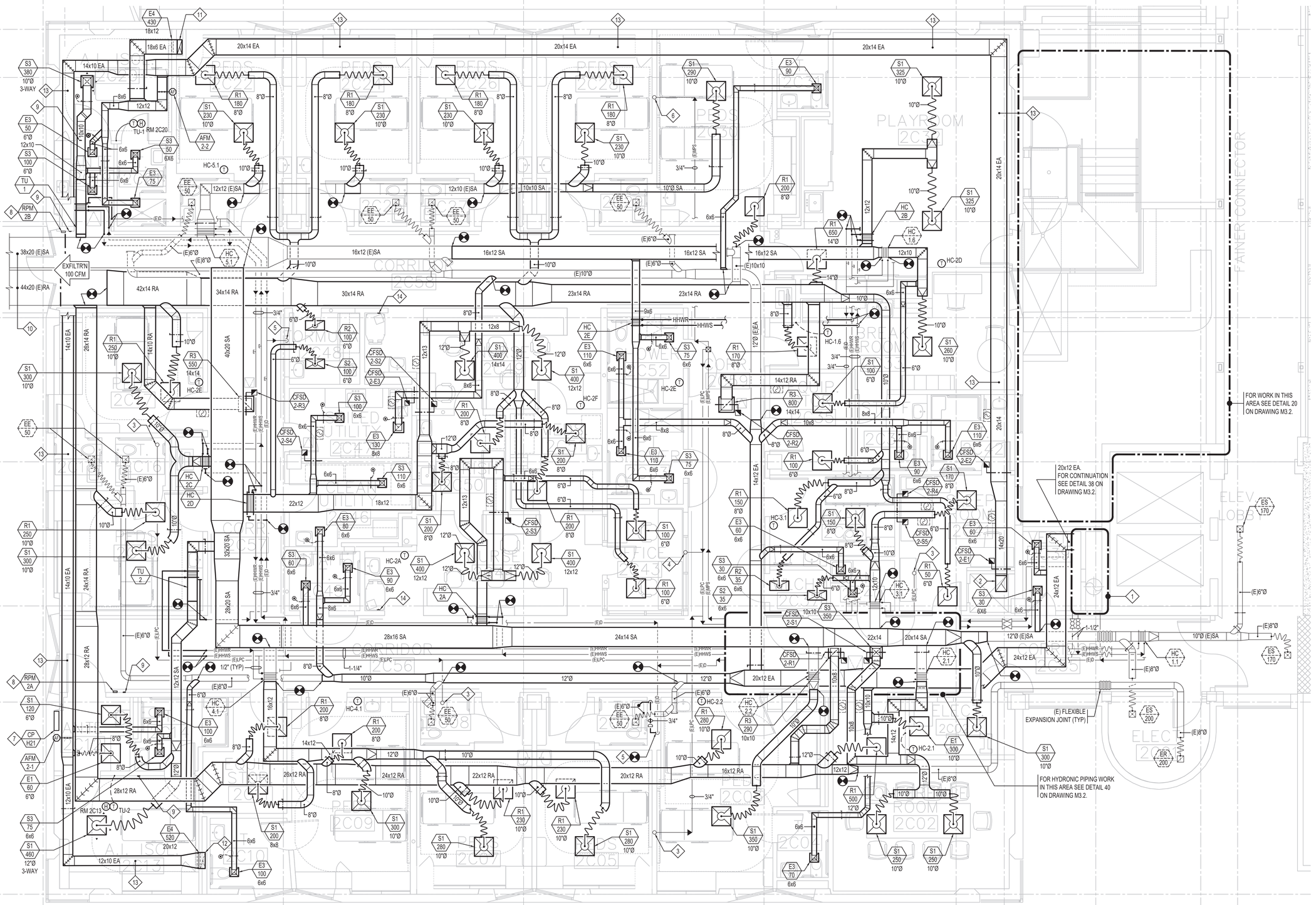

SEE DRAWING M3.1 FOR AIR BALANCE TABLE

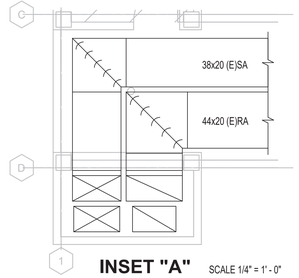

INSET "A" SCALE 1/4" = 1' - 0"

40 SECOND FLOOR HVAC PLAN

SCALE 1/4" = 1' - 0"

NUMBERED NOTES:

(THIS DRAWING ONLY)

1. FOR PIPING MODIFICATIONS IN THIS AREA SEE DETAIL 38 ON DRAWING M3.2.
2. 20x14 EXHAUST DUCT UP IN SHAFT TO ROOF.
3. 3/4" EXISTING LPC FROM FLOOR ABOVE.
4. 1" EXISTING LPC FROM FLOOR ABOVE.
5. 3/4" EXISTING DRAIN DOWN, ROUTE TO TAILPIECE OF ADJACENT LAVATORY.
6. 3/4" EXISTING MPS UP TO THIRD FLOOR.
7. ATTACH CONTROL PANEL TO EXISTING CONCRETE WALL WITH (4) 3/8" EXPANSION ANCHOR BOLTS. SET TOP OF PANEL AT 60" ABOVE FINISH FLOOR.
8. MOUNT PRESSURE MONITOR TO ELECTRICAL BOX WITH PLASTER RING. SET BOTTOM OF MONITOR AT 65" ABOVE FINISHED FLOOR.
9. MOUNT SENSOR PORT FOR ROOM PRESSURE MONITOR TO ELECTRICAL BOX WITH PLASTER RING. SET BOTTOM OF SENSOR PORT AT 90"+/- ABOVE FINISHED FLOOR.
10. FOR CONTINUATION SEE INSET "A" ON THIS DRAWING.
11. 18x6 EXHAUST DUCT DOWN TO LOW REGISTER. SEE DETAIL 27 ON DRAWING M5.1.
12. 20x6 EXHAUST DUCT DOWN TO LOW REGISTER. SEE DETAIL 27 ON DRAWING M5.1.
13. LABEL EXHAUST DUCT WITH STENCILED SIGNS THAT STATE "CAUTION AIRBORNE INFECTION ISOLATION ROOM EXHAUST DUCT". SIGNS AND THEIR SPACING SHALL BE PER SPECIFICATION PARAGRAPH 3.19 E.
14. MOUNT REMOTE ANNUNCIATOR FOR ROOM PRESSURE MONITOR TO ELECTRICAL BOX WITH PLASTER RING. SET BOTTOM OF ANNUNCIATOR AT 50"+/- ABOVE FINISHED FLOOR.

VENTURA COUNTY HEALTH CARE AGENCY

PUBLIC VENTURA COUNTY WORKS

ENGINEERING SERVICES

RASMUSSEN & ASSOCIATES
Architecture
Planning
Interiors
21 S. California Street
Fourth Floor
Ventura, California 93001
(805) 648-1234

IRJ ENGINEERS, INC.
MECHANICAL & ELECTRICAL ENGINEERS
4517 MARKET STREET, SUITE 1B VENTURA, CALIFORNIA 93003
(805) 642-2355

JOB No. 2027-00

FOR PLAN REVIEW ONLY

PROFESSIONAL SEALS

LICENSED ARCHITECT JAY LOMAGNO C-20801 12-31-23 STATE OF CALIFORNIA

REGISTERED PROFESSIONAL ENGINEER STEVEN F. ROMOFSKY No. 23191 MECHANICAL STATE OF CALIFORNIA

PERMIT APPROVAL STAMP

REVIEWED IN ACCORDANCE WITH THE REQUIREMENTS OF T24, CCR
APPROVED
Department of Health Care Access and Information
FACILITIES DEVELOPMENT DIVISION
9/28/2022, 3:17:57 PM
H202495-56-00
Laura Baldrati

PERMIT NO HCAI #H202495-56-00

NO	REVISION	DATE
△		

PUBLIC WORKS PROJECT MANAGER

CONSULTANT PROJECT MANAGER
Jay Lomagno

DRAWN BY | CHECKED BY

CONSULTANT JOB NO A000495 | DATE 06/15/2022

PROJECT TITLE AND ADDRESS

VENTURA COUNTY MEDICAL CENTER PEDIATRIC UNIT

300 HILLMONT AVE
VENTURA, CA 93003

COUNTY SPEC NUMBER CP21-04

COUNTY PROJECT NUMBER P6T20009

COUNTY DWG NO | SHEET 40 OF 89

SHEET TITLE
SECOND FLOOR HVAC PLAN

SHEET NO M2.2

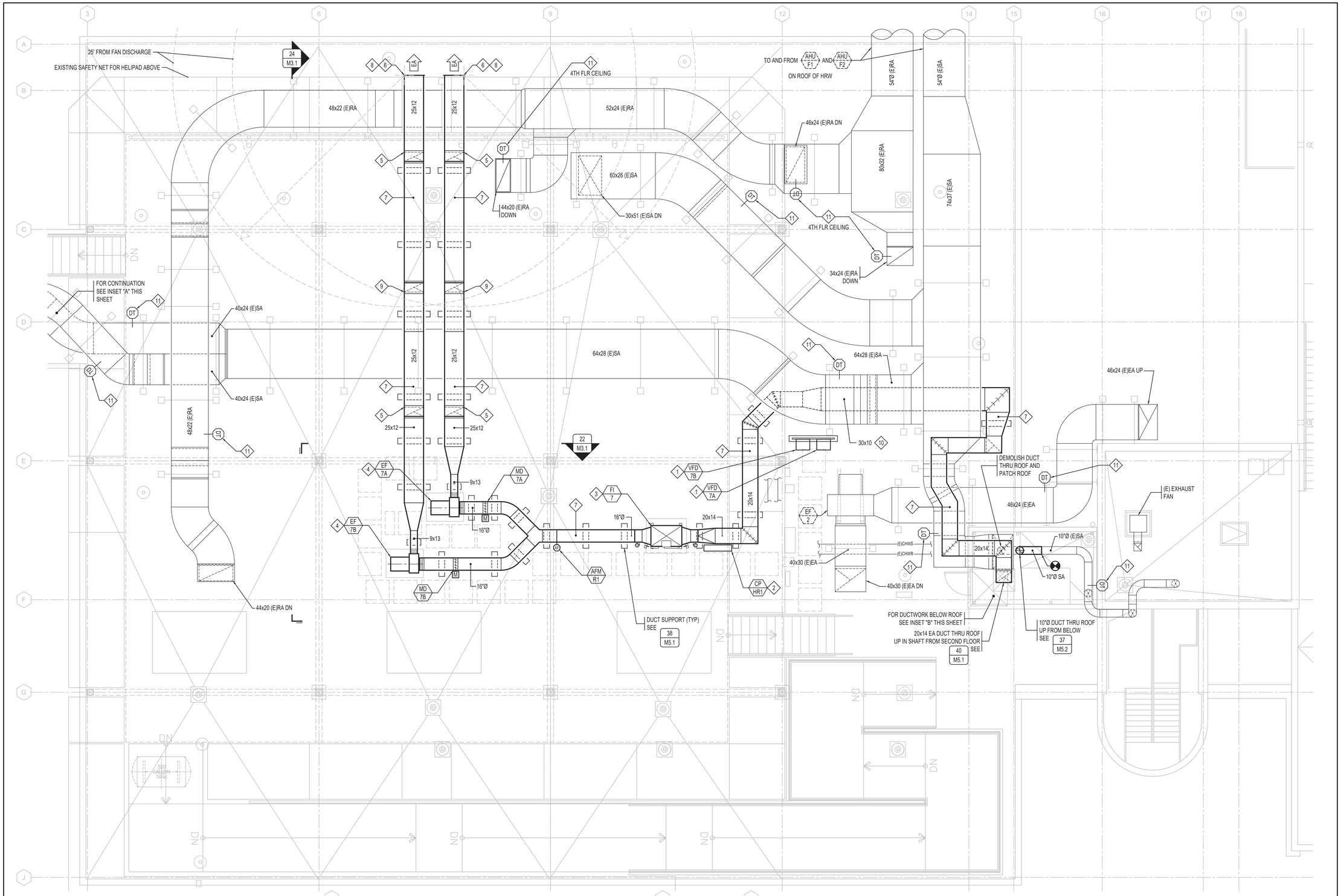

40 ROOF HVAC PLAN

SCALE 1/4" = 1' - 0"

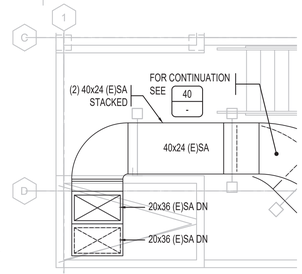

INSET "A"

SCALE 1/4" = 1' - 0"

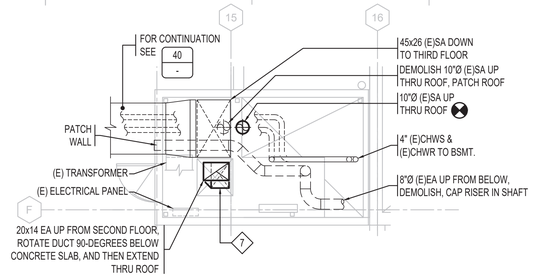

INSET "B"

SCALE 1/4" = 1' - 0"

NUMBERED NOTES:

(THIS DRAWING ONLY)

1. MOUNT VFD-7A AND VFD-7B ON STEEL FRAME, SEE DETAIL 7 ON DRAWING A8.5. TOP OF VFD ENCLOSURE SHALL BE 60" +/- ABOVE ROOF.
2. MOUNT CP-HR1 ON BOLTED METAL FRAMING CHANNEL CONNECTED TO DUCT SUPPORTS.
3. ANCHOR FI-7 TO LEVEL CONCRETE RAILS, REFER TO DETAIL 9 ON DRAWING S-3.01.
4. ANCHOR EF-7A AND EF-7B TO LEVEL CONCRETE RAILS, REFER TO DETAIL 9 ON DRAWING S-3.01.
5. OFFSET EXHAUST DUCT ABOVE EXISTING DUCT.
6. TERMINATE EXHAUST DUCT WITH 1/2" SQUARE GALVANIZED HARDWARE CLOTH IN REMOVABLE FRAME.
7. LABEL EXHAUST DUCT WITH STENCILED SIGNS THAT STATE "CAUTION AIRBORNE INFECTION ISOLATION ROOMS EXHAUST DUCT". SIGNS AND THEIR SPACING SHALL BE PER SPECIFICATION PARAGRAPH 3.19 E.
8. LABEL FAN DISCHARGE "DISCHARGE FROM AIRBORNE INFECTION ROOMS EXHAUST FAN. COMPLY WITH FACILITY'S INFECTION CONTROL PROCEDURES REGARDING THIS DISCHARGE."
9. OFFSET EXHAUST DUCT DOWN.
10. SUSPEND DUCT FROM EXISTING DUCT SUPPORTS.
11. PERFORM DUCT TRAVERSE AT THIS LOCATION.

VENTURA COUNTY HEALTH CARE AGENCY

PUBLIC WORKS VENTURA COUNTY

ENGINEERING SERVICES

RASMUSSEN & ASSOCIATES
Architecture
Planning
Interiors
21 S. California Street
Fourth Floor
Ventura, California 93001
(805) 648-1234

IRJ ENGINEERS, INC.
MECHANICAL & ELECTRICAL ENGINEERS
4517 MARKET STREET, SUITE 1B VENTURA, CALIFORNIA 93003
(805) 642-2355

FOR PLAN REVIEW ONLY

PROFESSIONAL SEALS

PERMIT APPROVAL STAMP

REVIEWED IN ACCORDANCE WITH THE REQUIREMENTS OF T24, CCR
APPROVED
Department of Health Care Access and Information
FACILITIES DEVELOPMENT DIVISION
9/28/2022, 3:17:57 PM
H202495-56-00
Laura Baldrati

PERMIT NO HCAI #H202495-56-00

NO	REVISION	DATE
△		

PUBLIC WORKS PROJECT MANAGER

CONSULTANT PROJECT MANAGER: Jay Lomagno

DRAWN BY | CHECKED BY

CONSULTANT JOB NO: AI00495 | DATE: 06/15/2022

PROJECT TITLE AND ADDRESS

VENTURA COUNTY MEDICAL CENTER PEDIATRIC UNIT

300 HILLMONT AVE
VENTURA, CA 93003

COUNTY SPEC NUMBER: CP21-04

COUNTY PROJECT NUMBER: P6T20009

COUNTY DWG NO | SHEET 41 OF 89

SHEET TITLE: ROOF HVAC PLAN

SHEET NO: M2.3

Z2027008R.DWG 2022081 M2.3.DWG 6/15/2022 1:00PM IRJ ENGINEERS, INC.

EXISTING AIR HANDLING UNITS (TEST, ADJUST, AND BALANCE THESE AIR HANDLING UNITS)

UNIT TAG	DUTY	COILS			FILTERS		MIN. OA	MANUFACTURER AND MODEL NO.	FAN	SUPPLY FAN						MOTOR NAMEPLATE				
		PHC	CC	HC	PRE	FINAL	CFM			CFM (TOTAL)	ESP	TSP	RPM	BHP	QTY	RPM	HP	V	HZ	PH
AHU F1	FAINER WING 1ST FLOOR THRU 4TH FLOOR (AIR QTY. FROM TAB SURVEY)	NO	YES	NO	YES	YES	6,233	TEMTROL ITF-RDHRE43	SUPPLY	21,020	4.90	8.21	-	8.1	4	3500	10.5	460	30	3
									RETURN	14,787	2.90	9.17	-	2.4	4	3500	10.5	460	30	3
AHU F2	FAINER WING 1ST FLOOR THRU 4TH FLOOR (AIR QTY. FROM TAB SURVEY)	NO	YES	NO	YES	YES	6,233	TEMTROL ITF-RDHRE43	SUPPLY	21,020	4.90	8.21	-	8.1	4	3500	10.5	460	30	3
									RETURN	14,787	2.90	9.17	-	2.4	4	3500	10.5	460	30	3

EXISTING FAN

UNIT TAG	DUTY	CFM	STATIC PRESSURE	FAN		MOTOR NAMEPLATE					TYPE	MANUFACTURER AND MODEL NO.	REMARKS
				RPM	BHP	RPM	HP	V	HZ	PH			
EF 1	FAINER WING BSMT. MECH. & ELEC. ROOMS	11,600	2.50	-	-	1750	10	460	60	3	AIR FOIL UTILITY SET	TRANE CAFB30F12BC1HL	TEST, ADJUST, AND BALANCE THIS FAN.
EF 2	FAINER WING BASEMENT THRU 4TH FLOOR	11,600	2.50	-	-	1750	10	460	60	3	AIR FOIL UTILITY SET	TRANE CAFB30F12BC1HL	TEST, ADJUST, AND BALANCE THIS FAN.
EF 6	FAINER WING DECONTAM	500	0.75	1657	-	-	1/6	120	60	1	CENTRIFUGAL UP-BLAST	COOK 80CPV	-

EXISTING REHEAT COILS

UNIT TAG	DUTY	CFM	SIZE	FV	MBH	EDB	LDB	EWT	LWT	GPM	ROWS	MAX APD	MAX WPD	FPI	REMARKS
HC 1	ROOM TEMPERATURE CONTROL	SEE PLANS	SEE PLANS	-	1.5 - 13.5	62°F	85°F	160°F	140°F	0.15 - 1.4	1	.30	4.0	12	-
HC 2	ROOM TEMPERATURE CONTROL	SEE PLANS	SEE PLANS	-	7.0 - 16.0	62°F	85°F	160°F	140°F	0.7 - 1.6	1	.30	4.0	12	
HC 3	ROOM TEMPERATURE CONTROL	SEE PLANS	SEE PLANS	-	3.0 - 21.0	62°F	85°F	160°F	140°F	0.8 - 2.1	1	.30	4.0	12	
HC 4	ROOM TEMPERATURE CONTROL	SEE PLANS	SEE PLANS	-	8.0 - 23.0	62°F	85°F	160°F	140°F	0.8 - 2.3	1	.30	4.0	12	
HC 5	ROOM TEMPERATURE CONTROL	SEE PLANS	SEE PLANS	-	21 - 30.0	62°F	85°F	160°F	140°F	2.1 - 3.0	1	.30	4.0	12	
HC 6	ROOM TEMPERATURE CONTROL	SEE PLANS	SEE PLANS	-	43.0	62°F	85°F	160°F	140°F	4.3	1	.30	4.0	12	

AIR BALANCE TABLE

Room No.	Room		CMC TABLE 4-A					Supply Air (cfm)	Return Air (cfm)	Exhaust Air (cfm)	Transfer Air (cfm)	Differential Air Quantity (%)	Design Air Changes per Hour		
	Description	Volume (cu. ft.)	Function or Space	Press. Rel. to Adj. Areas (P/NR/N)	Min. Air Changes per Hour		All Rm. Air Exhausted (Yes/NR)						Supply Air		Return or Exhaust
					Min. OA	Min. Total							OA	Total	
2C01	Elec.	973.6	Unsterile Sup.	NR	2	2	NR	200	200	0	0	0.0%	3.7	12.3	12.3
2C02.1	Elect.	376	Unsterile Sup.	NR	2	2	NR	300	0	300	0	0.0%	14.2	47.9	47.9
2C02	Conference Room	3006	Exam Room	NR	2	6	NR	500	500	0	0	0.0%	3.0	10.0	10.0
2C04	Toilet	304	Toilet Room	Neg	0	10	Yes	0	0	70	-70		0.0	0.0	13.8
2C03	Peds	2610	Patient Room	NR	2	4	NR	350	280	0	70	20.0%	2.4	8.0	6.4
2C05	Peds	1899	Patient Room	NR	2	4	NR	280	230	0	50	17.9%	2.6	8.8	7.3
2C06	Toilet	200	Toilet Room	Neg	0	10	Yes	0	0	50	-50		0.0	0.0	15.0
2C07	Peds	1809	Patient Room	NR	2	4	NR	280	230	0	50	17.9%	2.8	9.3	7.6
2C08	Toilet	200	Toilet Room	Neg	0	10	Yes	0	0	50	-50		0.0	0.0	15.0
2C09	Peds	2205	Patient Room	NR	2	4	NR	300	200	0	100	33.3%	2.4	8.2	5.4
2C10	Toilet	496	Toilet Room	Neg	0	10	Yes	0	0	100	-100		0.0	0.0	12.1
2C11	Equip. Stor.	712	Unsterile Sup.	NR	2	2	NR	200	200	0	0	0.0%	5.0	16.9	16.9
2C13	A. I. Isol.	1674	A. I. Isol. Rm.	Neg	2	12	Yes	460	0	520	-60	13.0%	4.9	16.5	18.6
2C14	Toilet	496	A. I. Toilet Rm.	Neg	0	10	Yes	75	0	100	-25	33.3%	2.7	9.1	12.1
2C12	Ante	531	A. I. Ante.	Neg.	0	10	Yes	120	0	60	60	50.0%	4.0	13.6	6.8
2C15	Peds	1737	Patient Room	NR	2	4	NR	300	250	0	50	16.7%	3.1	10.4	8.6
2C16	Toilet	208	Toilet Room	Neg	0	10	Yes	0	0	50	-50		0.0	0.0	14.4
2C17	Peds	1737	Patient Room	NR	2	4	NR	300	250	0	50	16.7%	3.1	10.4	8.6
2C18	Toilet	200	Toilet Room	Neg	0	10	Yes	0	0	50	-50		0.0	0.0	15.0
2C59	Corridor	3006	Patient Corr	NR	0	2	NR	0	800	0	-800		0.0	0.0	16.0
2C20	A. I. Isol.	1296	A. I. Isol. Rm.	Neg	2	12	Yes	380	0	430	-50	13.2%	5.2	17.6	19.9
2C21	Toilet	336	A. I. Toilet Rm.	Neg	0	10	Yes	50	0	75	-25	50.0%	2.7	8.9	13.4
2C19	Ante	432	A. I. Ante.	Neg	0	10	Yes	100	0	50	50	50.0%	4.1	13.9	6.9
2C22	Peds	1899	Patient Room	NR	2	4	NR	230	180	0	50	21.7%	2.2	7.3	5.7
2C23	Toilet	200	Toilet Room	Neg	0	10	Yes	0	0	50	-50		0.0	0.0	15.0
2C24	Peds	1899	Patient Room	NR	2	4	NR	230	180	0	50	21.7%	2.2	7.3	5.7
2C25	Toilet	200	Toilet Room	Neg	0	10	Yes	0	0	50	-50		0.0	0.0	15.0
2C26	Peds	1899	Patient Room	NR	2	4	NR	230	180	0	50	21.7%	2.2	7.3	5.7
2C27	Toilet	200	Toilet Room	Neg	0	10	Yes	0	0	50	-50		0.0	0.0	15.0
2C28	Peds	1899	Patient Room	NR	2	4	NR	230	180	0	50	21.7%	2.2	7.3	5.7
2C29	Toilet	200	Toilet Room	Neg	0	10	Yes	0	0	50	-50		0.0	0.0	15.0
2C30	Peds	2385	Patient Room	NR	2	4	NR	290	200	0	90	31.0%	2.2	7.3	5.0
2C31	Toilet	336	Toilet Room	Neg	0	10	Yes	0	0	90	-90		0.0	0.0	16.1
2C32	Play Room	5031	Ped. Play Area	NR	2	6	NR	650	650	0	0	0.0%	2.3	7.8	7.8
2C33	Break Room	2133	n/a	NR	2	6	NR	260	170	0	90	34.6%	2.2	7.3	4.8
2C35	Equipment Storage	756	Unsterile Sup.	NR	2	2	NR	100	100	0	0	0.0%	2.4	7.9	7.9
2C34	Staff Toilet	440	Toilet Room	Neg	0	10	Yes	0	0	90	-90		0.0	0.0	12.3
2C36	Exam	1044	Exam Room	NR	2	6	NR	150	150	0	0	0.0%	2.6	8.6	8.6
2C37	Wheelchair	225	Unsterile Sup.	NR	2	2	NR	35	35	0	0	0.0%	2.8	9.3	9.3
2C43	Office	688	n/a	NR	2	4	NR	100	100	0	0	0.0%	2.6	8.7	8.7
2C40	Janitor	280	Janitor	Neg	0	10	Yes	30	0	60	-30	100.0%	1.9	6.4	12.9
2C41	Sleep Room	1341	n/a	NR	2	4	NR	170	60	0	110	64.7%	2.3	7.6	2.7
2C39	Vest.	400	Soiled Linen Stor.	Neg	0	10	Yes	30	0	60	-30	100.0%	1.3	4.5	9.0
2C42	Toilet	544	Toilet Room	Neg	0	10	Yes	0	0	110	-110		0.0	0.0	12.1
2C44	Nurse	2169	Patient Corr	NR	0	2	NR	800	0	0	800	100.0%	6.6	22.1	0.0
2C45	Staff Toilet	360	Toilet Room	Neg	0	10	Yes	60	0	90	-30	50.0%	3.0	10.0	15.0
2C46	Clean Utility	792	Clean Workroom	Pos	2	4	NR	110	0	80	30	27.3%	2.5	8.3	6.1
2C47	Soiled Utility	720	Soiled Workroom	Neg	2	6	Yes	100	0	130	-30	30.0%	2.5	8.3	10.8
2C48	Formula	448	Nourishment Room	NR	0	2	NR	100	100	0	0	0.0%	4.0	13.4	13.4
2C50	Nourish	736	Nourishment Room	NR	0	2	NR	200	200	0	0	0.0%	4.8	16.3	16.3
2C51	Meds	776	Medication Room	NR	2	4	NR	200	200	0	0	0.0%	4.6	15.5	15.5
2C49	Nurse	2124	Patient Corr	NR	0	2	NR	800	0	0	800	100.0%	6.7	22.6	0.0
2C52	P.T. Shower	552	Shower Room	Neg	0	10	Yes	75	0	110	-35	46.7%	2.4	8.2	12.0
2C53	P.T. Shower	584	Shower Room	Neg	0	10	Yes	75	0	110	-35	46.7%	2.3	7.7	11.3
2C55	Corridor	3096	Patient Corr	NR	0	2	NR	350	290	0	60	17.1%	2.0	6.8	5.6
2C55A	Elevator Lobby	2286	Patient Corr	NR	0	2	NR	340	0	0	340	100.0%	2.7	8.9	0.0
2C56	Corridor	5571	Patient Corr	NR	0	2	NR	0	0	0	0		0.0	0.0	0.0
2C57	Corridor	2484	Patient Corr	NR	0	2	NR	0	550	0	-550		0.0	0.0	13.3
2C58	Corridor	4887	Patient Corr	NR	0	2	NR	0	0	0	0		0.0	0.0	0.0

Abbreviations:

A. I. Isol. Rm.	Airborne Infection Isolation Room
A. I. Toilet Rm.	Airborne Infection Toilet Room
A. I. Ante.	Airborne Infection Anteroom

MOTORIZED DAMPERS

UNIT TAG	DUTY	CFM	DAMPER SIZE	VELOCITY		MAX. DIFF. PRESSURE	LEAKAGE RATING	MAXIMUM VELOCITY	ACTUATOR MOTOR				MANUFACTURER AND MODEL NO.	REMARKS
									V	HZ	PH	PWR		
MD 7A	EXHAUST FAN EF-7A FLOW SHUTOFF	1,500	16"Ø	1,074 FPM		30" W.C.	BUBBLE-TIGHT	6,500 FPM	24	60	1	9.5W	POTTORFF CD-95R BELIMO EFB24-S	FURNISH WITH WEATHER SHIELD.
MD 7B	EXHAUST FAN EF-7B FLOW SHUTOFF	1,500	16"Ø	1,074 FPM		30" W.C.	BUBBLE-TIGHT	6,500 FPM	24	60	1	9.5W	POTTORFF CD-95R BELIMO EFB24-S	FURNISH WITH WEATHER SHIELD.

AIR FILTER

UNIT TAG	DUTY	CFM	FACE VELOCITY	FILTER SIZE	APD		MERV (ASHRAE 52.2-2007)	FILTER TYPE	HOUSING TYPE	WEIGHT (LBS)	MANUFACTURER AND MODEL NO.	REMARKS
					INITIAL	FINAL						
FI 7	AIRBORNE INFECTION ISOL. RM. EXH. PREFILTER	1,500	375	(1) 24x24x4	0.25" W.C.	1.0" W.C.	11	BOX STYLE HIGH EFFICIENCY	BAG IN/OUT	750	CAMFIL CF-1X1-021P-1GB-SS, CF-1X1-400-1PB-SS, CF-BTFB-16-M-SS	FURNISH WITH FILTER PRESSURE DROP GAUGES THAT ARE MARKED AT THE FINAL AIR PRESSURE DROP.
	AIRBORNE INFECTION ISOL. RM. EXH. FINAL FILTER	1,500	375	(1) 24x24x11.5	0.70" W.C.	3.0" W.C.	17	HEPA	BAG IN/OUT			

AIR TERMINAL UNITS

UNIT TAG	TYPE	UNIT SIZE	AIR QUANTITY (CFM)		REHEAT COIL								APD	POWER				WEIGHT (LBS)	MANUFACTURER AND MODEL NO.	REMARKS
			MAX	MIN.	MBH	EDB	LDB	EWT	LWT	GPM	ROWS	WPD		V	HZ	PH	VA			
TU 1	SINGLE DUCT TERM. UNIT WITH HHW REHEAT COIL	7	530	530	21.7	52.0°F	90.0°F	160.0°F	140.0°F	2.18	2	3.2 FT W.C.	0.24 IN. W.C.	24	60	1	20	40	PRICE INDUSTRIES SDVQ	FURNISH WITH HOSPITAL GRADE LINER AND ATTENUATOR. OSP-0302. HANGER BRACKETS (HB)
TU 2	SINGLE DUCT TERM. UNIT WITH HHW REHEAT COIL	7	655	655	26.9	52.0°F	90.0°F	160.0°F	140.0°F	2.69	2	3.2 FT W.C.	0.30 IN. W.C.	24	60	1	20	50	PRICE INDUSTRIES SDVQ	FURNISH WITH HOSPITAL GRADE LINER AND ATTENUATOR. OSP-0302. HANGER BRACKETS (HB)

NOTES:

1. AIR PRESSURE DROP (APD) VALUES ARE AT VALVE MAXIMUM AIR QUANTITY AND INCLUDES THE PRESSURE DROP OF THE REHEAT COIL.
2. DISCHARGE SOUND POWER VALUES SHALL NOT EXCEED 63 dB IN THE SECOND OCTAVE BAND ARE AT SCHEDULED VALVE MAXIMUM AIR QUANTITY AND 0.5 INCHES AIR PRESSURE DROP ACROSS THE TERMINAL UNIT.
3. BRANCH HEATING HOT WATER PIPING SIZE IS 3/4".

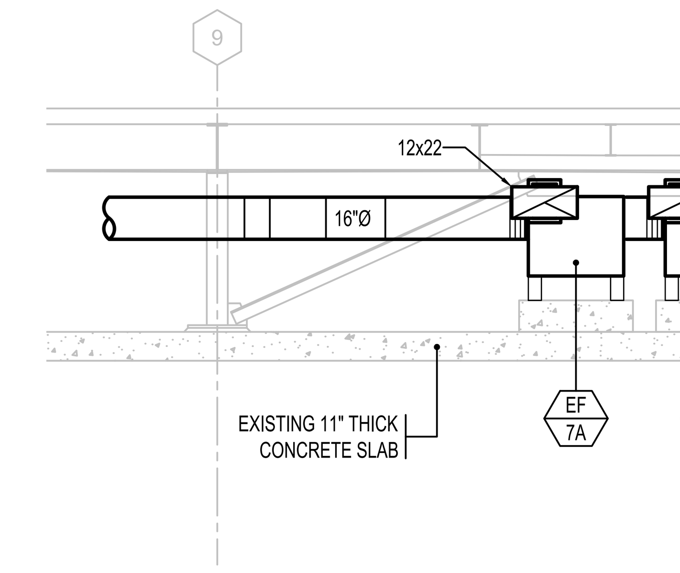

22 SECTION - LOOKING SOUTH

SCALE 1/4" = 1' - 0"

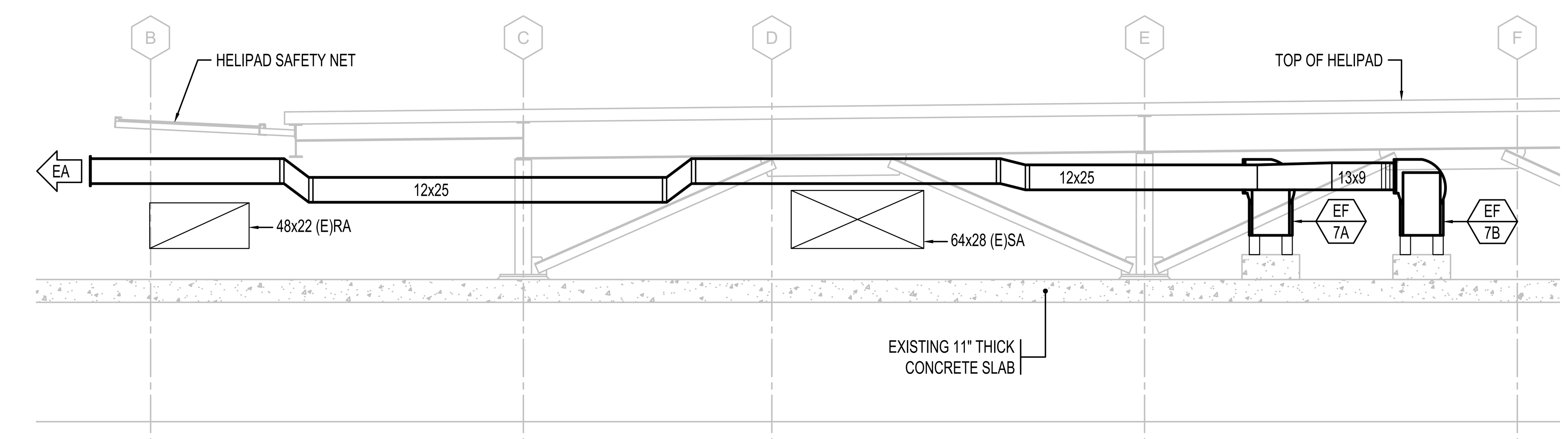

24 SECTION - LOOKING EAST

SCALE 1/2" = 1' - 0"

VENTURA COUNTY HEALTH CARE AGENCY

PUBLIC WORKS VENTURA COUNTY

ENGINEERING SERVICES

RASMUSSEN & ASSOCIATES
Architecture
Planning
Interiors
21 S. California Street
Fourth Floor
Ventura, California 93001
(805) 648-1234

IRJ ENGINEERS, INC.
MECHANICAL & ELECTRICAL ENGINEERS
4517 MARKET STREET, SUITE 16 VENTURA, CALIFORNIA 93003
(805) 642-2355
JOB No. 2027-00

FOR PLAN REVIEW ONLY

PROFESSIONAL SEALS

PERMIT APPROVAL STAMP

REVIEWED IN ACCORDANCE WITH THE REQUIREMENTS OF T24, CCR
APPROVED
Department of Health Care Access and Information
FACILITIES DEVELOPMENT DIVISION
9/28/2022, 3:17:57 PM
H202495-56-00
Laura Baldrati

PERMIT NO HCAI #H202495-56-00

NO	REVISION	DATE
△	HCAI RESUBMITTAL	09/19/2022

PUBLIC WORKS PROJECT MANAGER

CONSULTANT PROJECT MANAGER: Jay Lomagno

DRAWN BY / CHECKED BY

CONSULTANT JOB NO: A000495 | DATE: 06/15/2022

PROJECT TITLE AND ADDRESS

VENTURA COUNTY MEDICAL CENTER PEDIATRIC UNIT

300 HILLMONT AVE
VENTURA, CA 93003

COUNTY SPEC NUMBER: CP21-04

COUNTY PROJECT NUMBER: P6T20009

COUNTY DWG NO | SHEET 42 OF 89

SHEET TITLE: SECTIONS, EQUIPMENT SCHEDULES, AIR BALANCE TABLE

SHEET NO: M3.1

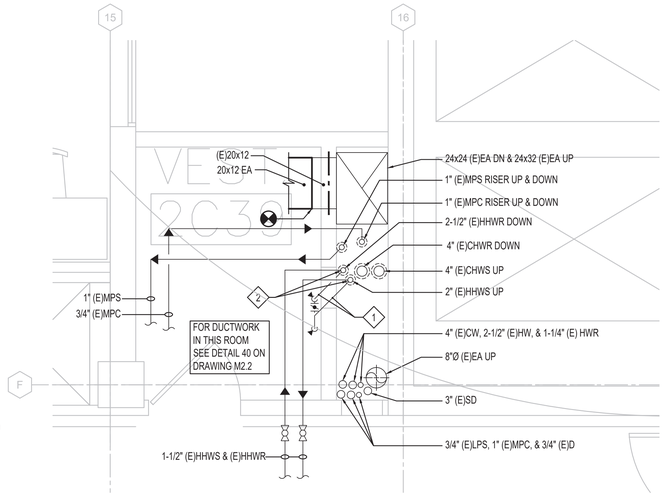

HEATING HOT WATER BYPASS PIPING REMOVAL:

1. SURVEY THE EXISTING HEATING HOT WATER SYSTEM. LOCATE AND IDENTIFY ALL SERVICE AND SECTIONALIZING VALVES AND CONFIRM THEIR OPERATION..
2. PREPARE A METHOD OF PROCEDURE FOR THE PLANNED WORK THAT INDICATES THE SCHEDULED TIME AND DURATION FOR ALL TASKS.
3. COORDINATE PLANNED SERVICE INTERRUPTION OF THE HEATING HOT WATER SYSTEM WITH THE FACILITY. INTERRUPTION SHALL OCCUR AT A TIME ACCEPTABLE TO THE FACILITY.
4. ARRANGE WITH THE FACILITY TO INTERRUPT THE HEATING HOT WATER SYSTEM.
5. SHUTDOWN THE HEATING HOT WATER HEAT EXCHANGERS.
6. CLOSE SERVICE VALVES FOR THE BASEMENT AND FLOORS 1, 2, 3, AND 4 TO MAINTAIN WATER IN THE PIPING AND MINIMIZE THE QUANTITY OF WATER THAT MUST BE DRAINED.
7. DRAIN THE WATER FROM THE RISERS.
8. DEMOLISH THE BYPASS PIPING.
9. INSTALL NEW SECTIONS OF RISER PIPING WITHIN SHAFT.
10. PRESSURE TEST PIPING AND APPLY INSULATION.
11. FLUSH THE HEATING HOT WATER SYSTEM AND FILL IT WITH WATER. PERFORM INITIAL CHEMICAL TREATMENT.
12. RESTORE THE HEATING HOT WATER HEAT EXCHANGERS TO OPERATION.
13. VERIFY THE OPERATION OF THE HEATING HOT WATER SYSTEM, INCLUDING THE REHEAT COILS AND TEMPERATURE CONTROLS.
14. PERFORM WATER TESTING, ADJUSTING, AND BALANCING OF THE HEATING HOT WATER SYSTEM.

NUMBERED NOTES:

(THIS DRAWING ONLY)

1. DEMOLISH BYPASS PIPING AND VALVES. PATCH SHAFT WALL.
2. INSTALL RISERS IN SHAFT AND RECONNECT THE PIPING FOR THE SECOND, THIRD, AND FOURTH FLOORS TO THE PIPING FOR THE BASEMENT AND FIRST FLOOR.

38 VESTIBULE 2C39 ENLARGED MECHANICAL PLAN

SCALE 1/2" = 1' - 0"

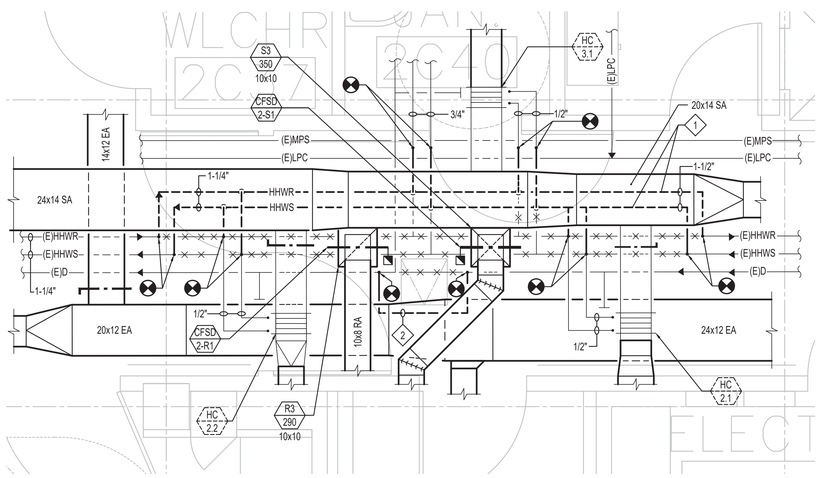

NUMBERED NOTES:

(THIS DRAWING ONLY)

1. RELOCATE EXISTING HEATING HOT WATER SUPPLY AND RETURN PIPING FOR INSTALLATION OF COMBINATION FIRE/SMOKE DAMPERS.
2. RELOCATE 3/4" EXISTING DRAIN PIPING FOR INSTALLATION OF ACCESS DOOR.

40 CORRIDOR 2C55 ENLARGED MECHANICAL PLAN

SCALE 1/2" = 1' - 0"

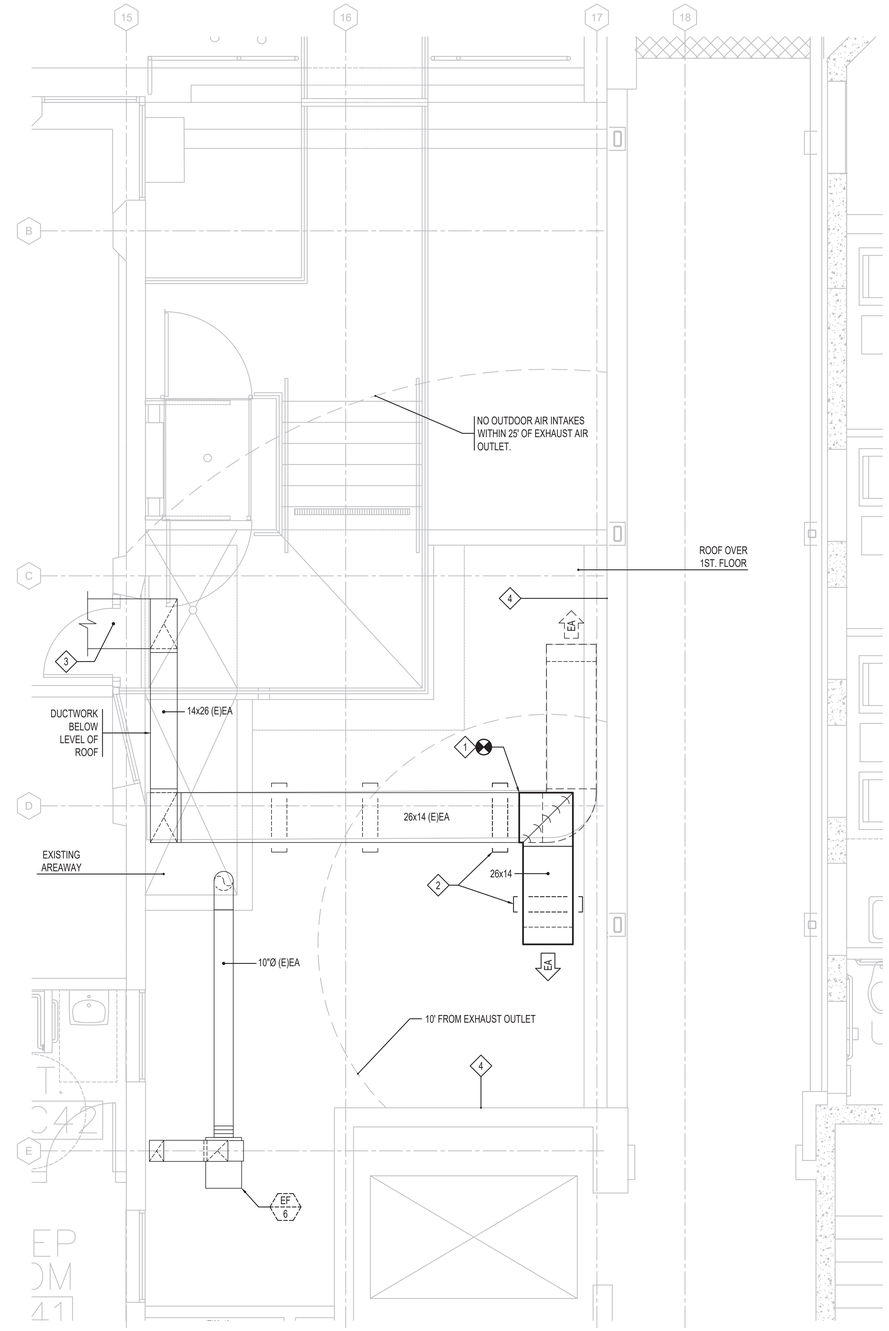

NUMBERED NOTES:

(THIS DRAWING ONLY)

1. POINT OF CONNECTION FOR THIS WORK. DEMOLISH BEYOND.
2. DUCT SUPPORT, SEE DETAIL 38 ON DRAWING M5.1.
3. EXHAUST DUCT FROM EXISTING EXHAUST FAN EF-1. SET EXHAUST AIR QUANTITY AT 3,000 CFM.
4. NO DOORS OR OPERABLE WINDOWS IN THIS WALL.

20 LOW ROOF MECHANICAL PLAN

SCALE 3/8" = 1' - 0"

VENTURA COUNTY HEALTH CARE AGENCY

PUBLIC VENTURA COUNTY WORKS

ENGINEERING SERVICES

RASMUSSEN & ASSOCIATES
Architecture
Planning
Interiors
21 S. California Street
Fourth Floor
Ventura, California 93001
(805) 648-1234

IRJ ENGINEERS, INC.
MECHANICAL & ELECTRICAL ENGINEERS
4517 MARKET STREET, SUITE 1B VENTURA, CALIFORNIA 93003
(805) 642-2355

FOR PLAN REVIEW ONLY

PROFESSIONAL SEALS

PERMIT APPROVAL STAMP

REVIEWED IN ACCORDANCE WITH THE REQUIREMENTS OF T24, CCR
APPROVED
Department of Health Care Access and Information
FACILITIES DEVELOPMENT DIVISION
9/28/2022, 3:17:57 PM
H202495-56-00
Laura Baldrati

PERMIT NO HCAI #H202495-56-00

NO	REVISION	DATE
1		

PUBLIC WORKS PROJECT MANAGER

CONSULTANT PROJECT MANAGER
Jay Lomagno

DRAWN BY | CHECKED BY

CONSULTANT JOB NO A000495 | DATE 06/15/2022

PROJECT TITLE AND ADDRESS

VENTURA COUNTY MEDICAL CENTER PEDIATRIC UNIT

300 HILLMONT AVE
VENTURA, CA 93003

COUNTY SPEC NUMBER CP21-04

COUNTY PROJECT NUMBER P6T20009

COUNTY DWG NO | SHEET 43 OF 89

SHEET TITLE

ENLARGED MECHANICAL PLANS

SHEET NO M3.2

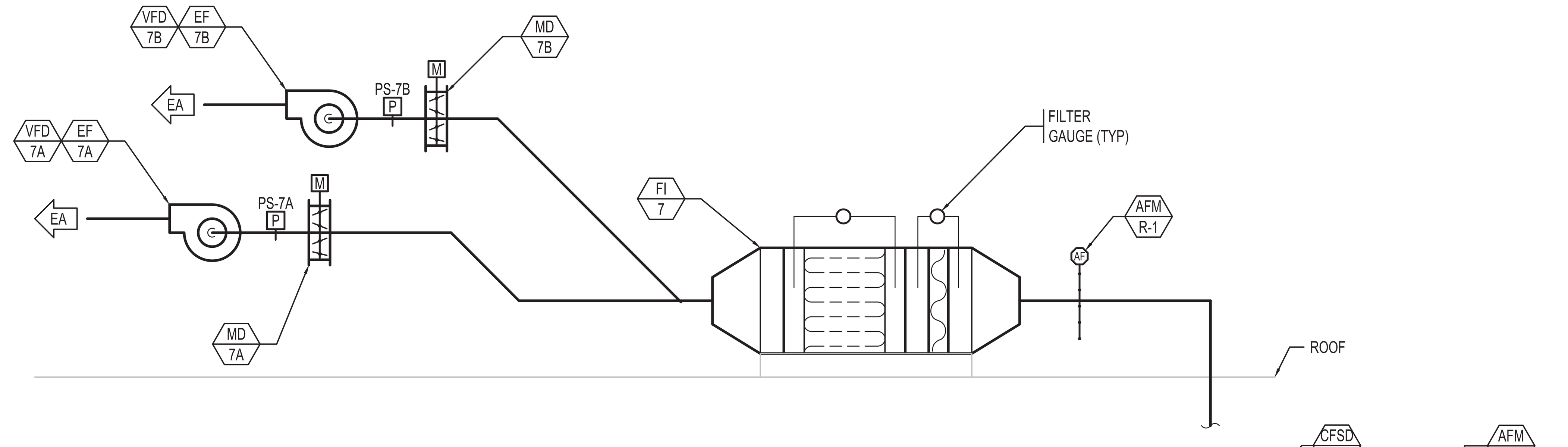

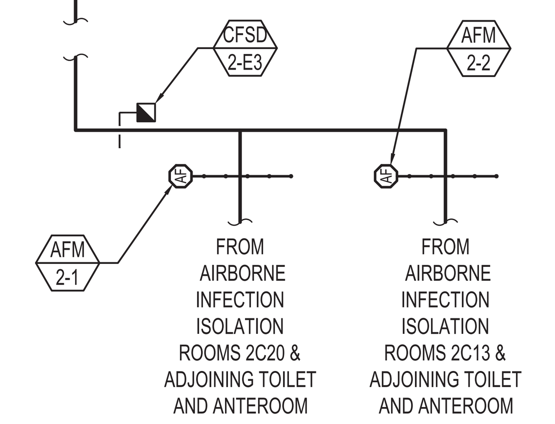

SEQUENCE OF OPERATION - AIRBORNE INFECTION ISOLATION ROOM EXHAUST SYSTEM:

1. MOTORIZED DAMPER MD-7A IS OPEN AND EXHAUST FAN EF-7A OPERATES CONTINUOUSLY (LEAD POSITION).
2. MOTORIZED DAMPER MD-7B IS CLOSED AND EXHAUST FAN EF-7B IS OFF (LAG POSITION).
3. AIR FLOW METER AFM-R1 MEASURES THE EXHAUST AIR QUANTITY IN THE MAIN EXHAUST DUCT AND REPORTS IT TO THE MECHANICAL CONTROL SYSTEM.
4. THE MECHANICAL CONTROL SYSTEM MONITORS THE AIR QUANTITY REPORTED BY AFM-R-1 AND ADJUSTS THE OUTPUT SPEED OF VFD-7A (LEAD POSITION) TO MODULATE THE PERFORMANCE OF EF-7A AND MAINTAIN A CONSTANT EXHAUST AIR QUANTITY WITHDRAWN FROM THE AIRBORNE INFECTION ISOLATION ROOMS AS THE FILTERS LOAD WITH DUST.
5. PRESSURE SENSOR PS-7A MEASURES THE DUCT STATIC PRESSURE FOR EF-7A IN THE FAN INLET DUCTWORK AND REPORTS IT TO THE MECHANICAL CONTROL SYSTEM. PRESSURE SENSOR PS-7B MEASURES THE DUCT STATIC PRESSURE FOR EF-7B IN THE FAN INLET DUCTWORK AND REPORTS IT TO THE MECHANICAL CONTROL SYSTEM.
6. THE MECHANICAL CONTROL SYSTEM STOPS THE OPERATING EXHAUST FAN WHEN A HIGH STATIC PRESSURE CONDITION OCCURS TO PREVENT AN OVER-PRESSURIZING THE EXHAUST DUCTWORK.
7. AFTER A PREDETERMINED INTERVAL, SELECTED BY THE FACILITY, EF-7B STARTS AND VFD-7B MODULATES ITS PERFORMANCE AS MD-7B OPENS AND MD-7A CLOSES WHILE VFD-7A MODULATES THE SPEED OF EF-7A DOWN AND THEN SHUTS IT OFF. EF-7B IS IN THE LEAD POSITION AND EF-7A IS IN THE LAG POSITION.
8. THE MECHANICAL CONTROL SYSTEM MONITORS THE AIR QUANTITIES REPORTED BY AFM-2-1 AND AFM-2-2 AND REPORTS THEM TO THE MECHANICAL CONTROL SYSTEM. AN ALARM IS GENERATED WHEN THE AIR QUANTITIES ARE NOT AT THEIR SETPOINTS.
9. UPON FAILURE OF THE LEAD VFD, LEAD FAN, LOSS OF STATIC PRESSURE, OR LOSS OF REQUIRED EXHAUST AIR FLOW THE SYSTEM SWITCHES FROM LEAD EQUIPMENT TO LAG EQUIPMENT. AN ALARM SIGNAL IS GENERATED WHEN ANY OF THESE CONDITIONS OCCURS.

	CONDITION	SETPOINT
ISO PEDS 2C13	ROOM TEMPERATURE ROOM HUMIDITY ROOM PRESSURE DIFFERENTIAL	74°F <= 60 % RH 0.10 IN. WC
ISO PEDS 2C20	ROOM TEMPERATURE ROOM HUMIDITY ROOM PRESSURE DIFFERENTIAL	74°F <= 60 % RH 0.10 IN. WC
AFM-R-1	EXHAUST AIR FLOW, MAIN EXHAUST DUCT (CONFIRMED DURING STARTUP)	1,100 CFM
AFM-2-1	EXHAUST AIR FLOW, BRANCH DUCT (CONFIRMED DURING STARTUP)	530 CFM
AFM-2-2	EXHAUST AIR FLOW, BRANCH DUCT (CONFIRMED DURING STARTUP)	655 CFM
FI-7	REFER TO FILTER SCHEDULE FOR FILTER PRESSURE DROP	
PS-7A & PS-7B	DUCT HIGH PRESSURE (CONFIRMED DURING STARTUP)	5.0 IN. WC
VFD-7A & VFD-7B	MINIMUM SPEED (CONFIRMED DURING STARTUP)	600 RPM

SEQUENCE OF OPERATION - SPACE TEMPERATURE AND HUMIDITY CONTROLS:

1. ROOM TEMPERATURE SENSORS MONITOR THE SPACE TEMPERATURE AND MODULATE THE HEATING HOT WATER CONTROL VALVE TO MAINTAIN SPACE TEMPERATURE AT SETPOINT.
2. ROOM HUMIDITY SENSORS MONITOR THE SPACE HUMIDITY AND ADJUSTS THE COLD PLENUM LEAVING AIR TEMPERATURE IN AHU-F-1 & AHU-F-2 TO MAINTAIN SPACE HUMIDITY BELOW SETPOINT.
3. TERMINAL UNITS TU-1 AND TU-2 MAINTAIN CONSTANT SUPPLY AIR QUANTITIES TO THE SPACES THEY SERVE.
4. ROOM PRESSURE MONITORS MEASURE THE ROOM DIFFERENTIAL PRESSURE AND PROVIDE LOCAL AND REMOTE ALARMS AND NOTIFY THE MECHANICAL CONTROL SYSTEM WHEN THIS DIFFERENTIAL PRESSURE IS NOT MAINTAINED.

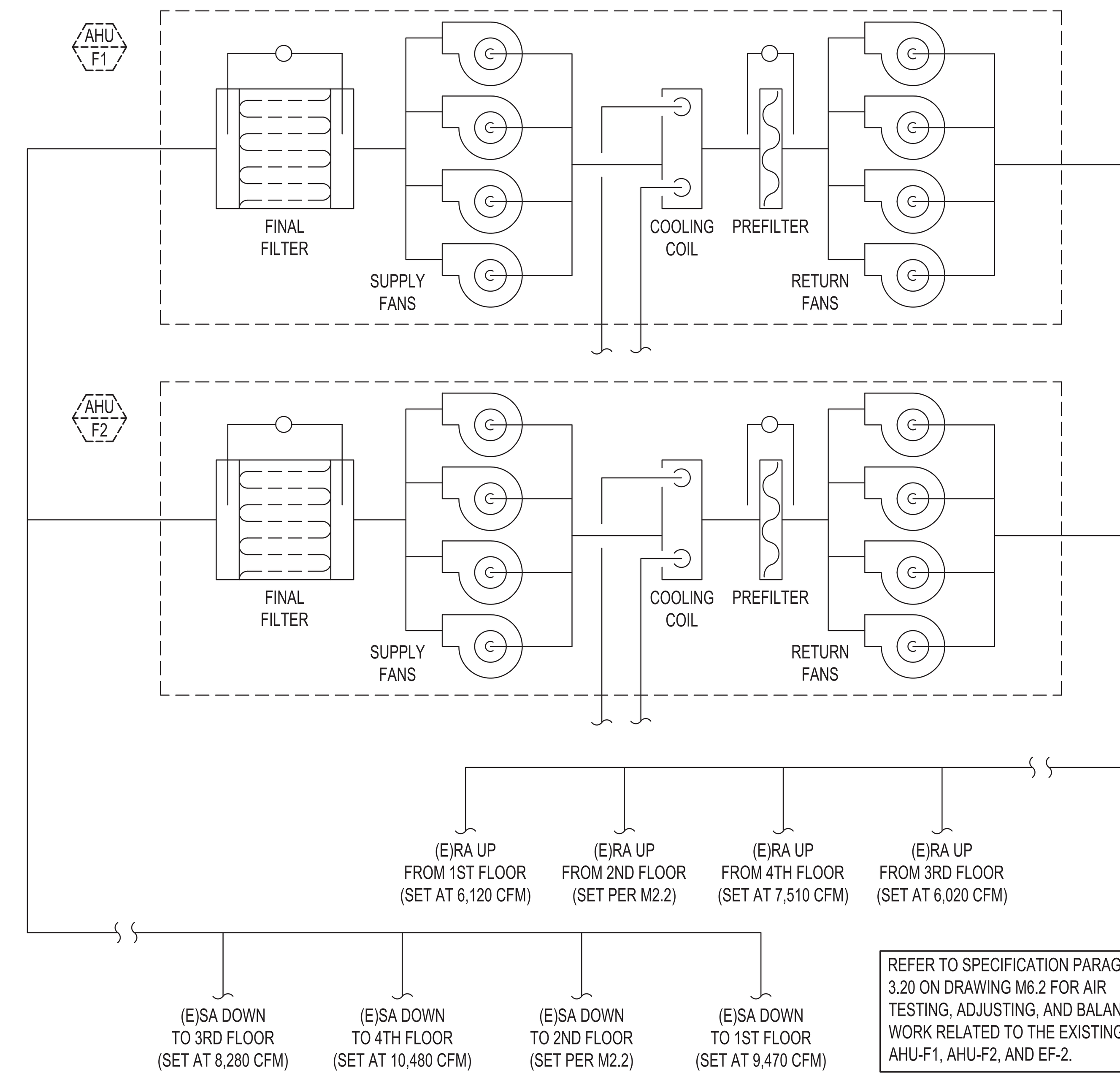

REFER TO SPECIFICATION PARAGRAPH 3.20 ON DRAWING M6.2 FOR AIR TESTING, ADJUSTING, AND BALANCING WORK RELATED TO THE EXISTING AHU-F1, AHU-F2, AND EF-2.

38 HVAC SYSTEM SCHEMATIC

NTS

MECHANICAL CONTROL SYSTEM POINTS LIST

POINT DESCRIPTION	ANALOG INPUT: TEMPERATURE - DB	TEMPERATURE - WB	TEMPERATURE - EWT	TEMPERATURE - LWT	STATIC PRESSURE	PRESSURE DROP	PRESSURE	FLOW	SETPOINT ADJUST.	DAMPER/VALVE POS.	RELATIVE HUMIDITY	ANALOG OUTPUT: VFD SPEED	DAMPER/VALVE POS.	ADJUST SETPOINT	TEMPERATURE RESET	STEAM PRODUCTION
OUTDOOR AIR	●	●														
EXHAUST FAN EF-7A					●											
EXHAUST AIR								●								
VARIABLE FREQUENCY DRIVE VFD-7A (EF-7A)									●			●				
FIRE ALARM INTERFACE																
EXHAUST FAN EF-7B					●											
EXHAUST AIR								●								
VARIABLE FREQUENCY DRIVE VFD-7B (EF-7B)									●			●				
FIRE ALARM INTERFACE																
PREFILTER						●										
FINAL FILTER						●										
AIR FLOW MONITOR AFM-R-1								●								
AIR FLOW MONITOR AFM-2-1								●								
AIR FLOW MONITOR AFM-2-2								●								
AIR TERMINAL UNIT TU-1	●	●	●	●				●								
HHW VALVE													●			
ROOM TEMPERATURE SENSOR	●													●		
AIR TERMINAL UNIT TU-2	●	●	●	●				●								
HHW VALVE													●			
ROOM TEMPERATURE SENSOR	●													●		
CONTROL INTEGRATOR																

POINT DESCRIPTION	DIGITAL INPUT: STATUS (ON/OFF)	OVERRIDE	ALARM	DIGITAL OUTPUT: START/STOP	ENABLE/DISABLE	ON/OFF	OPEN/CLOSE	ALARMS: HIGH ANALOG	LOW ANALOG	OFF NORMAL	BINARY	PROGRAMS: SENSOR FAIL	COMMUNICATION FAIL	DIAGNOSTICS	RUN TIME	TREND LOG	MAINT. WORK ORDER	DEMAND LIMITING	EVENT PROGRAMMING	SETBACK/SETUP	NIGHT/MORNING PURGE	TIME SCHEDULING	OPTIMAL START/STOP
OUTDOOR AIR								●	●			●	●	●		●							
EXHAUST FAN EF-7A	●							●	●			●	●	●		●							
EXHAUST AIR								●	●			●	●	●	●	●							
VARIABLE FREQUENCY DRIVE VFD-7A (EF-7A)	●	●	●	●				●	●			●	●	●		●							
FIRE ALARM INTERFACE			●																				
EXHAUST FAN EF-7B	●							●	●			●	●	●		●							
EXHAUST AIR								●	●			●	●	●	●	●							
VARIABLE FREQUENCY DRIVE VFD-7B (EF-7B)	●	●	●	●				●	●			●	●	●		●							
FIRE ALARM INTERFACE			●																				
PREFILTER								●	●			●	●	●		●							
FINAL FILTER								●	●			●	●	●		●							
AIR FLOW MONITOR AFM-R-1								●	●			●	●	●		●							
AIR FLOW MONITOR AFM-2-1								●	●			●	●	●		●							
AIR FLOW MONITOR AFM-2-2								●	●			●	●	●		●							
AIR TERMINAL UNIT TU-1								●	●			●	●										
HHW VALVE								●	●				●										
ROOM TEMPERATURE SENSOR													●			●							
AIR TERMINAL UNIT TU-2								●	●			●	●										
HHW VALVE								●	●				●										
ROOM TEMPERATURE SENSOR													●			●							
CONTROL INTEGRATOR																							

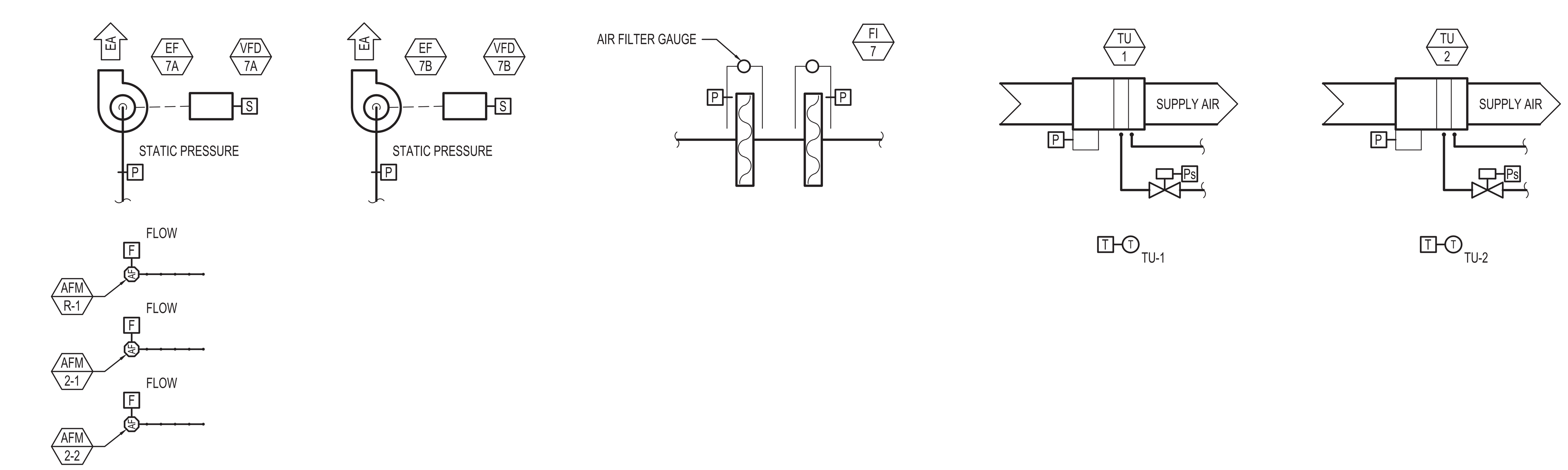

40 HVAC CONTROL SCHEMATIC

NTS

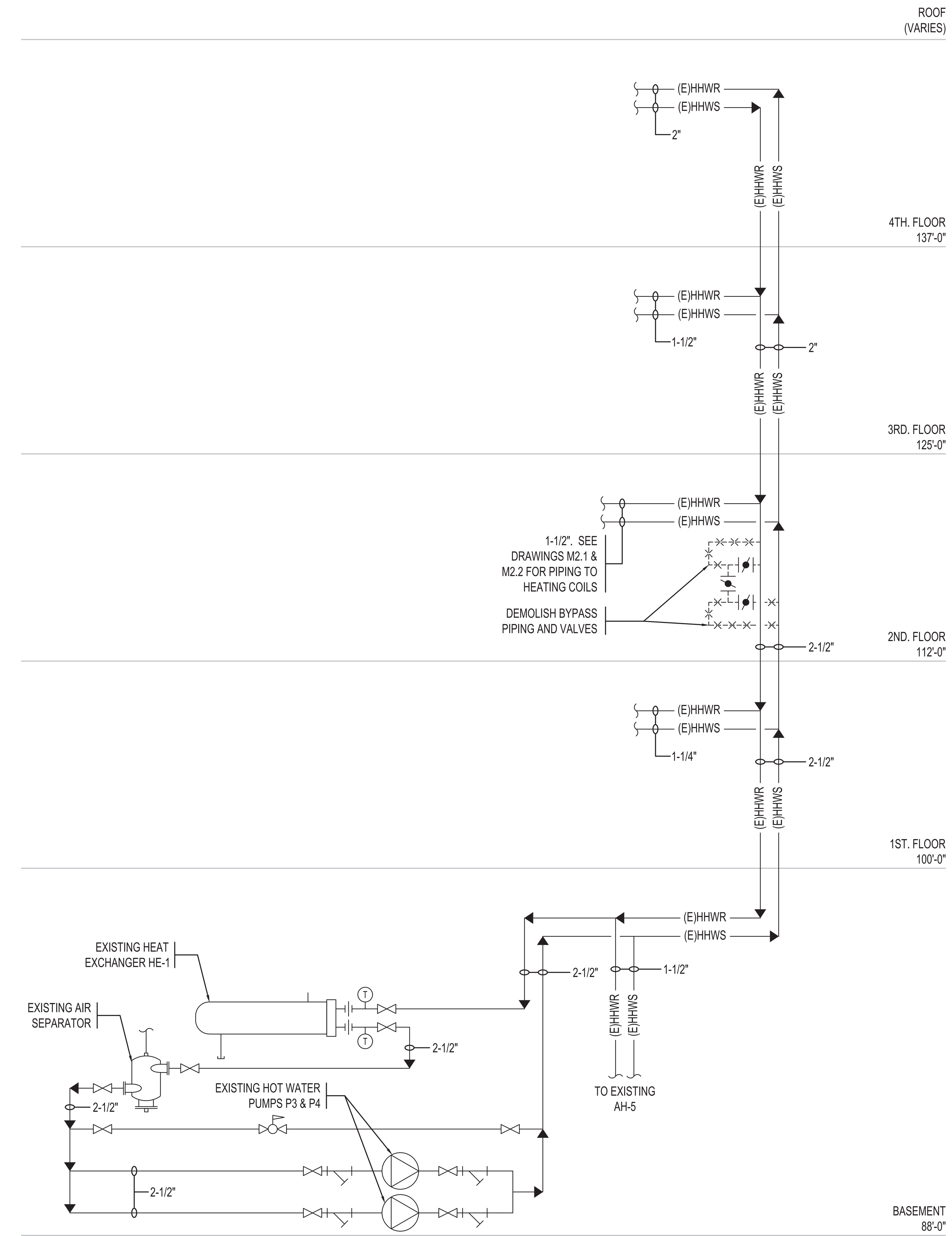

20 HHW SYSTEM RISER DIAGRAM

NTS

VENTURA COUNTY HEALTH CARE AGENCY

PUBLIC VENTURA COUNTY WORKS

ENGINEERING SERVICES

RASMUSSEN & ASSOCIATES
Architecture
Planning
Interiors
21 S.California Street
Fourth Floor
Ventura, California 93001
(805) 648-1234

IRJ ENGINEERS, INC. JOB No. 2027-00
MECHANICAL & ELECTRICAL ENGINEERS
4517 MARKET STREET, SUITE 1B VENTURA, CALIFORNIA 93003
(805) 642-2355

FOR PLAN REVIEW ONLY

PROFESSIONAL SEALS

PERMIT APPROVAL STAMP

REVIEWED IN ACCORDANCE WITH THE REQUIREMENTS OF T24, CCR
APPROVED
Department of Health Care Access and Information
FACILITIES DEVELOPMENT DIVISION
9/28/2022, 3:17:57 PM
H202495-56-00
Laura Baldrati

PERMIT NO HCAI #H202495-56-00

NO	REVISION	DATE
△		

PUBLIC WORKS PROJECT MANAGER

CONSULTANT PROJECT MANAGER: Jay Lomagno

DRAWN BY | CHECKED BY

CONSULTANT JOB NO: A000495 | DATE: 06/15/2022

PROJECT TITLE AND ADDRESS

VENTURA COUNTY MEDICAL CENTER PEDIATRIC UNIT

300 HILLMONT AVE
VENTURA, CA 93003

COUNTY SPEC NUMBER: CP21-04

COUNTY PROJECT NUMBER: P6T20009

COUNTY DWG NO | SHEET 44 OF 89

SHEET TITLE: HVAC SYSTEM SCHEMATIC, HVAC CONTROL SCHEMATIC

SHEET NO: M4.1

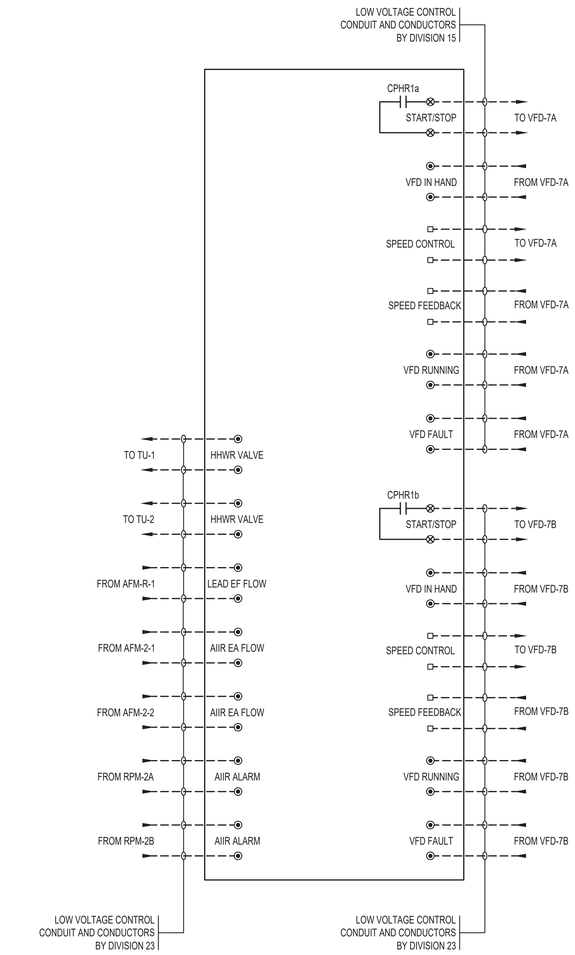

29 CP-HR1 CONTROL DIAGRAM

NTS

SEQUENCE OF OPERATION: THE ROOM PRESSURE MONITOR SENSES THE PRESSURE DIFFERENTIAL BETWEEN THE AIRBORNE INFECTION ISOLATION ROOM AND THE ADJOINING CORRIDOR. IT PROVIDES AN AUDIBLE AND VISUAL ALARM NEAR THE ENTRY DOOR TO THE ANTEROOM THAT SERVES THE AIIR WHEN THE DIFFERENTIAL PRESSURE SETPOINT IS NOT MAINTAINED. IT ALSO PROVIDES AN AUDIBLE AND VISUAL ALARM AT THE NURSE STATION WHEN THIS SETPOINT IS NOT MAINTAINED. A DOOR SWITCH DELAYS THE ALARM CONDITION WHEN DOOR IS OPEN FOR NO MORE THAN A PRESCRIBED TIME. THE MONITOR SIGNALS THAT THE DOOR IS OPEN.

SETPOINT:	
DIFFERENTIAL PRESSURE	-0.01 IN. WC
DOOR SWITCH ALARM DELAY	5 MINS.

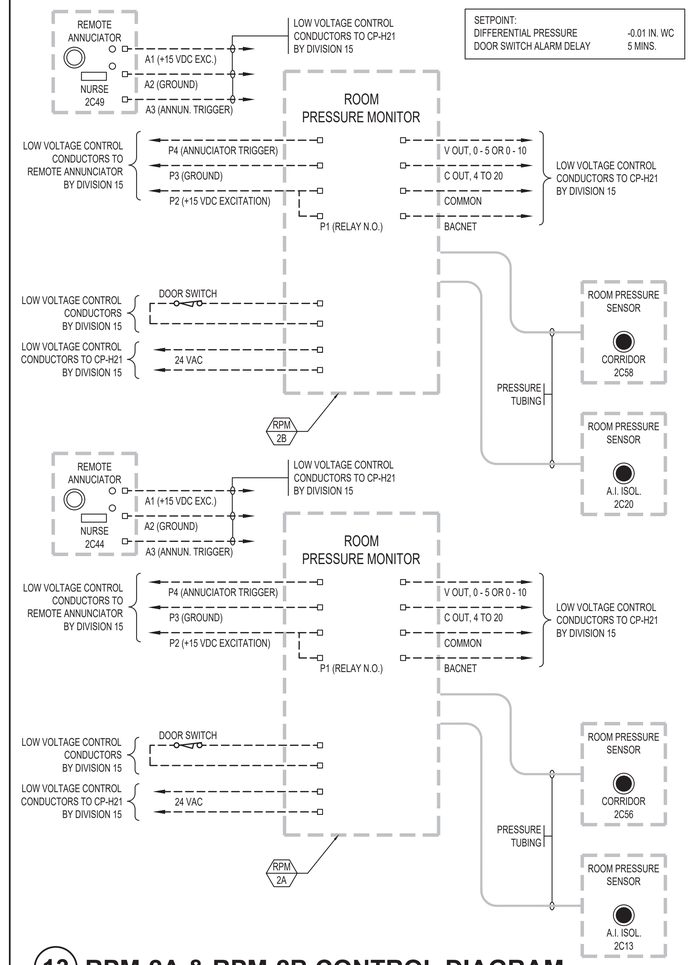

13 RPM-2A & RPM-2B CONTROL DIAGRAM

NTS

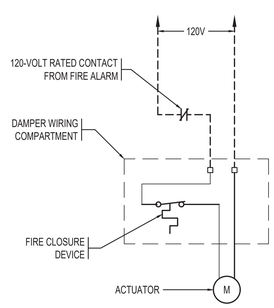

35 CFSD CONTROL DIAGRAM

NTS

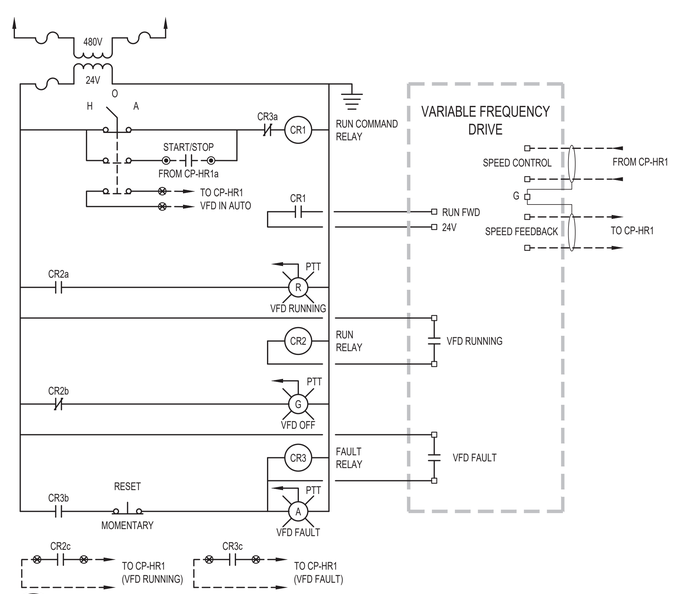

30 EF-7B & VFD-7B CONTROL DIAGRAM

NTS

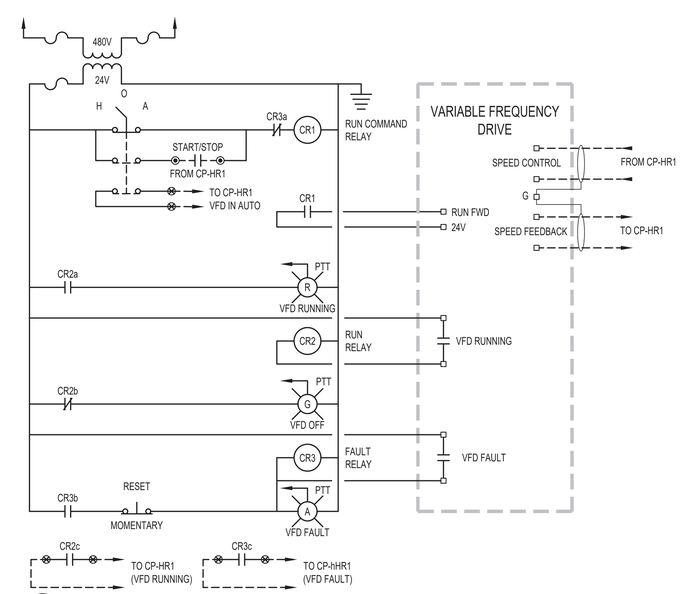

20 EF-7A & VFD-7A CONTROL DIAGRAM

NTS

VENTURA COUNTY HEALTH CARE AGENCY

PUBLIC WORKS VENTURA COUNTY

ENGINEERING SERVICES

RASMUSSEN & ASSOCIATES
Architecture
Planning
Interiors
21 S. California Street
Fourth Floor
Ventura, California 93001
(805) 648-1234

IRJ ENGINEERS, INC.
MECHANICAL & ELECTRICAL ENGINEERS
4517 MARKET STREET, SUITE 1B VENTURA, CALIFORNIA 93003
(805) 642-2355

FOR PLAN REVIEW ONLY

PROFESSIONAL SEALS

PERMIT APPROVAL STAMP

REVIEWED IN ACCORDANCE WITH THE REQUIREMENTS OF T24, CCR
APPROVED
Department of Health Care Access and Information
FACILITIES DEVELOPMENT DIVISION
9/28/2022, 3:17:57 PM
H202495-56-00
Laura Baldrati

PERMIT NO HCAI #H202495-56-00

NO	REVISION	DATE
△		

PUBLIC WORKS PROJECT MANAGER

CONSULTANT PROJECT MANAGER
Jay Lomagno

DRAWN BY	CHECKED BY
CONSULTANT JOB NO A100495	DATE 06/15/2022

PROJECT TITLE AND ADDRESS

VENTURA COUNTY MEDICAL CENTER PEDIATRIC UNIT

300 HILLMONT AVE
VENTURA, CA 93003

COUNTY SPEC NUMBER
CP21-04

COUNTY PROJECT NUMBER
P6T20009

COUNTY DWG NO — SHEET 45 OF 89

SHEET TITLE
HVAC CONTROL DIAGRAMS

SHEET NO
M4.2

Z2027008R.DWG 20220613 M4.2.DWG 6/15/2022 1:19PM IRJ ENGINEERS, INC.

NOTE:
THE TOTAL WEIGHT SUPPORTED SHALL BE LESS THAN 400 LBS. THE CENTER OF MASS SHALL BE LESS THAN 4'-0" ABOVE THE ROOF SURFACE. PROVIDE ONLY COMPONENTS REQUIRED FOR EACH MOUNTING LOCATION.

COMPONENT	MANUFACTURER	MODEL NUMBER
CHANNEL	COOPER B-LINE	B22
COMBINATION CHANNEL	COOPER B-LINE	B22A
CHANNEL NUT	COOPER B-LINE	N225
BOLT	COOPER B-LINE	1/2" x 1" HHCS
90° ANGLE FITTING	COOPER B-LINE	B844
POST BASE	COOPER B-LINE	B280
CLIP	COOPER B-LINE	B101
EXPANSION ANCHOR	HILTI	SS KB-TZ2
EQUIPMENT SUPPORT CURB	THYCURB	TEMS-3

	A	B	C	D	E	F
MINIMUM	26"	12"	48"	22"		6"
MAXIMUM	78"	64"	96"	36"	30"	36"

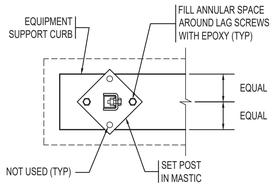

DETAIL A

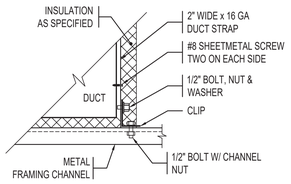

DETAIL B

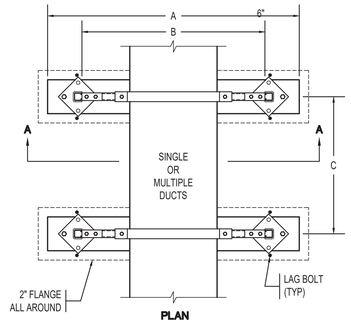

PLAN

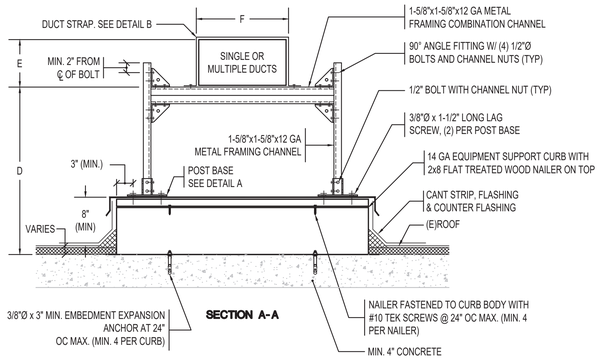

SECTION A-A

38 DUCT SUPPORT ON ROOF

NTS

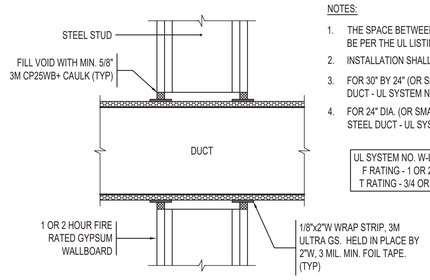

NOTES:

1. THE SPACE BETWEEN THE PENETRATING ITEM AND WALLBOARD SHALL BE PER THE UL LISTING.
2. INSTALLATION SHALL CONFORM TO UL LISTING.
3. FOR 30" BY 24" (OR SMALLER), NO. 24 GAUGE (OR HEAVIER) GALVANIZED STEEL DUCT - UL SYSTEM NO. W-L-7051.
4. FOR 24" DIA. (OR SMALLER), NO. 24 GAUGE (OR HEAVIER) SPIRAL WOUND GALV. STEEL DUCT - UL SYSTEM NO. W-L-7177.

UL SYSTEM NO. W-L-7051.	UL SYSTEM NO. W-L-7177.
F RATING - 1 OR 2 HR	F RATING - 1 OR 2 HR
T RATING - 3/4 OR 2 HR	T RATING - 1 OR 1-3/4 HR

39 INSULATED DUCT THRU RATED WALL

NTS

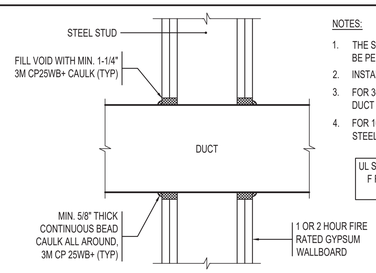

NOTES:

1. THE SPACE BETWEEN THE PENETRATING ITEM AND WALLBOARD SHALL BE PER THE UL LISTING.
2. INSTALLATION SHALL CONFORM TO UL LISTING.
3. FOR 36" BY 30" (OR SMALLER), NO. 24 GAUGE (OR HEAVIER) GALVANIZED STEEL DUCT - UL SYSTEM NO. W-L-7008.
4. FOR 16" DIA. (OR SMALLER), NO. 24 GAUGE (OR HEAVIER) SPIRAL WOUND GALV. STEEL DUCT - UL SYSTEM NO. W-L-7013.

UL SYSTEM NO. W-L-7008.	UL SYSTEM NO. W-L-7013.
F RATING - 1 OR 2 HR	F RATING - 2 HR
T RATING - 0 HR	T RATING - 0HR

40 UNINSULATED DUCT THRU RATED WALL

NTS

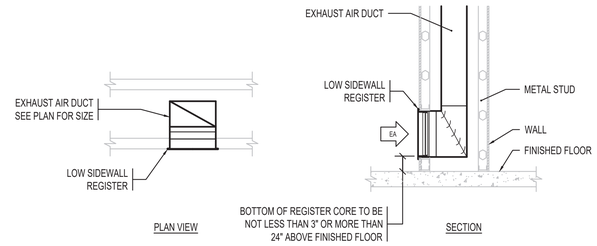

27 LOW EXHAUST REGISTER

NTS

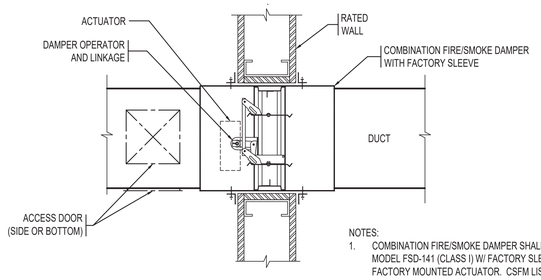

NOTES:

1. COMBINATION FIRE/SMOKE DAMPER SHALL BE POTTORFF MODEL FSD-141 (CLASS I) W/ FACTORY SLEEVE AND FACTORY MOUNTED ACTUATOR. CSFM LISTING: 3225-0368:110 AND 3230-0368:111. UL FILE: R11767.
2. INSTALL COMBINATION FIRE/SMOKE DAMPER PER MANUFACTURER'S INSTALLATION INSTRUCTIONS. INSTRUCTIONS SHALL BE ON SITE AND AVAILABLE TO THE INSPECTING AUTHORITY.

28 COMBINATION FIRE/SMOKE DAMPER - WALL TYPE

NTS

NOTES:

1. INSTALL SMOKE DAMPER AND CEILING RADIATION DAMPER PER MANUFACTURER'S INSTALLATION INSTRUCTIONS.
2. INSTALLATION INSTRUCTIONS SHALL BE ON SITE AND AVAILABLE TO THE INSPECTING AUTHORITY.
3. COMBINATION FIRE/SMOKE DAMPER SHALL BE POTTORFF, MODEL FSD-171-OP, CSFM LISTING 3230-0368:110 AND 3230-0368-111, UL 555S LISTING R11767.
4. DAMPER ACTUATOR: BELIMO FSNF120.

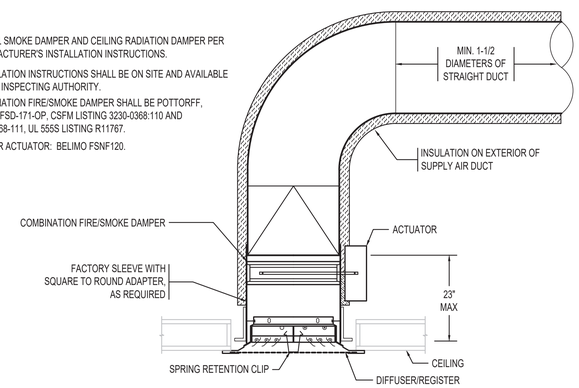

29 COMBINATION FIRE/SMOKE DAMPER - CEILING TYPE

NTS

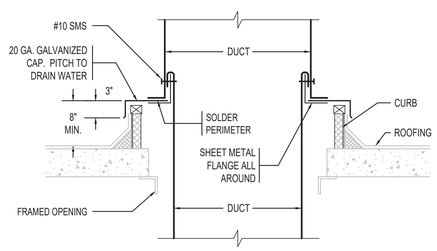

30 UNINSULATED DUCT THROUGH ROOF

NTS

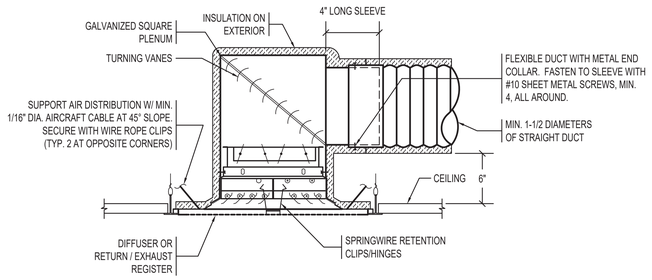

17 AIR DISTRIBUTION CONNECTION TO FLEXIBLE DUCT

NTS

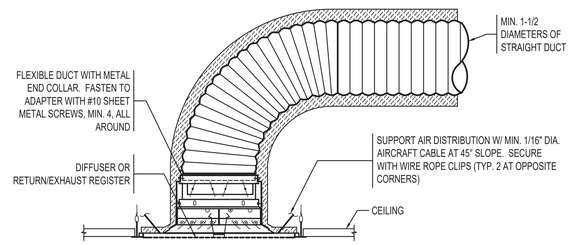

18 AIR DISTRIBUTION CONNECTION TO FLEXIBLE DUCT

NTS

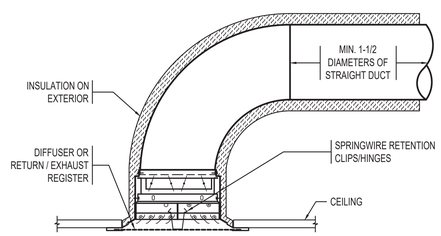

19 AIR DISTRIBUTION CONNECTION TO RIGID DUCT

NTS

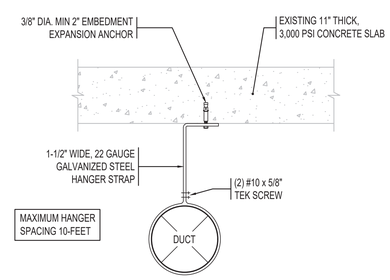

20 DUCT HANGER

NTS

VENTURA COUNTY HEALTH CARE AGENCY
PUBLIC VENTURA COUNTY WORKS
ENGINEERING SERVICES

RASMUSSEN & ASSOCIATES
Architecture
Planning
Interiors
21 S. California Street
Fourth Floor
Ventura, California 93001
(805) 648-1234

IRJ ENGINEERS, INC.
MECHANICAL & ELECTRICAL ENGINEERS
4517 MARKET STREET, SUITE 1B VENTURA, CALIFORNIA 93003
(805) 642-2355

FOR PLAN REVIEW ONLY

PROFESSIONAL SEALS

PERMIT APPROVAL STAMP

REVIEWED IN ACCORDANCE WITH THE REQUIREMENTS OF T24, CCR
APPROVED
Department of Health Care Access and Information
FACILITIES DEVELOPMENT DIVISION
9/28/2022, 3:17:57 PM
H202495-56-00
Laura Baldrati

PERMIT NO HCAI #H202495-56-00

NO	REVISION	DATE
△		

PUBLIC WORKS PROJECT MANAGER

CONSULTANT PROJECT MANAGER
Jay Lomagno

DRAWN BY	CHECKED BY
CONSULTANT JOB NO A000495	DATE 06/15/2022

PROJECT TITLE AND ADDRESS

VENTURA COUNTY MEDICAL CENTER PEDIATRIC UNIT

300 HILLMONT AVE
VENTURA, CA 93003

COUNTY SPEC NUMBER
CP21-04

COUNTY PROJECT NUMBER
P6T20009

COUNTY DWG NO — SHEET 46 OF 89

SHEET TITLE
MECHANICAL DETAILS

SHEET NO
M5.1

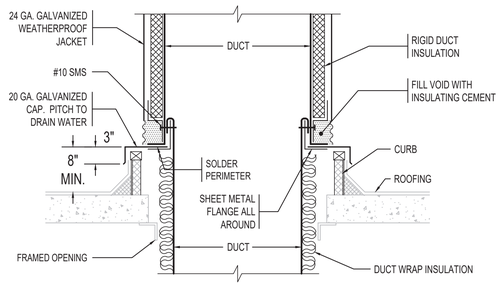

37 INSULATED DUCT THROUGH ROOF

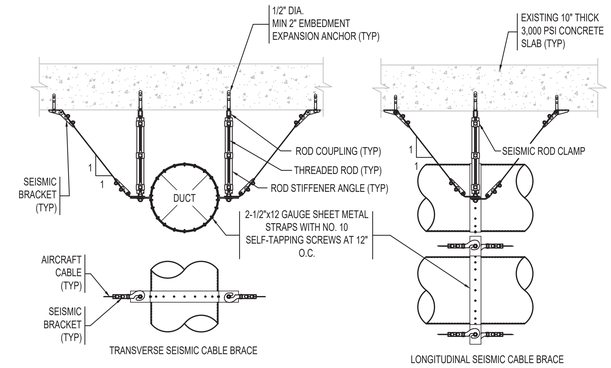

22 DUCT HANGER - SWAY

NTS

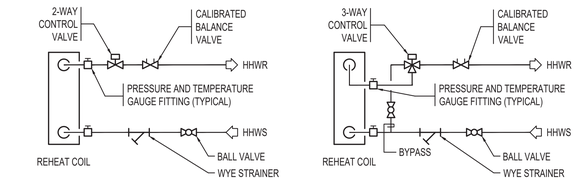

2-WAY CONTROL VALVE AT COIL

3-WAY CONTROL VALVE AT COIL

11 REHEAT COIL PIPING

NTS

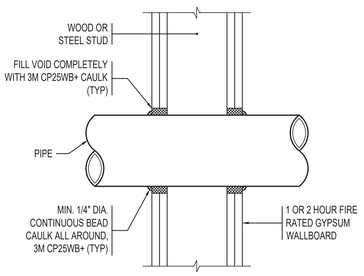

NOTES:

1. THE SPACE BETWEEN THE PENETRATING ITEM AND WALLBOARD SHALL BE PER THE UL LISTING.
2. FOR 24" DIA. (OR SMALLER), SCH. 10 (OR HEAVIER) STEEL PIPE. FOR 6" DIA. (OR SMALLER) TYPE L (OR HEAVIER) COPPER TUBING. FOR 24" DIA. (OR SMALLER) SERVICE WEIGHT (OR HEAVIER) CAST IRON PIPE.
3. UL SYSTEM NO. W-L-1001.
4. INSTALLATION SHALL CONFORM TO UL LISTING.

F RATING - 1 OR 2 HR
T RATING - 0 HR

38 UNINSULATED PIPE THRU RATED WALL

NTS

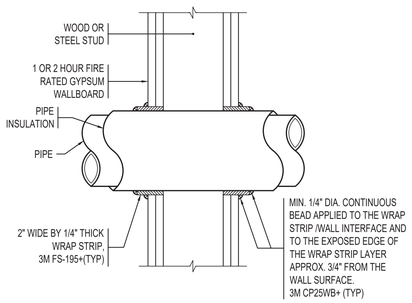

NOTES:

1. THE SPACE BETWEEN THE PENETRATING ITEM AND WALLBOARD SHALL BE PER THE UL LISTING.
2. PIPE INSULATION SHALL BE FIBERGLASS, MIN. 1" THICK, MIN. 3.5 PCF DENSITY, WITH ALL SERVICE JACKET SEALED PER UL LISTING.
3. FOR 12" DIA. (OR SMALLER), SCH. 10 OR HEAVIER) STEEL PIPE. FOR 6" DIA. (OR SMALLER) TYPE L (OR HEAVIER) COPPER TUBING.
4. UL SYSTEM NO. W-L-5001.
5. INSTALLATION SHALL CONFORM TO UL LISTING.

F RATING - 1 OR 2 HR
T RATING - 3/4 HR

28 INSULATED PIPE THRU RATED WALL

NTS

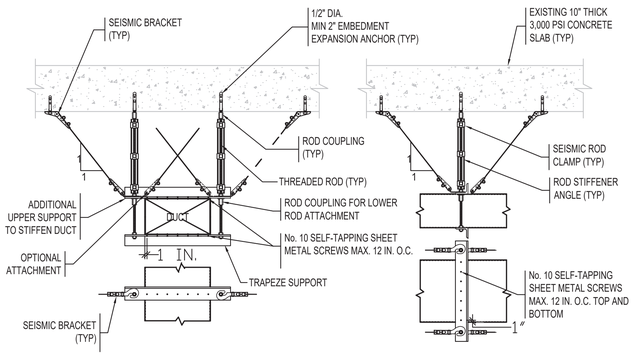

23 DUCT HANGER - SWAY

NTS

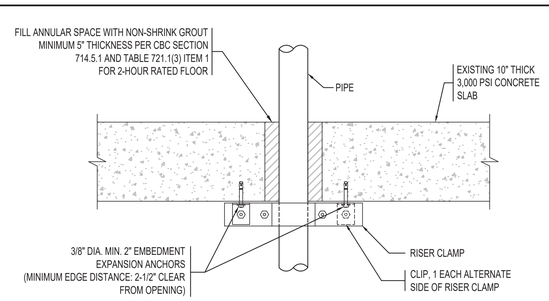

13 PIPE THRU FLOOR

NTS

SUPPORT CAST IRON PIPE AT EVERY OTHER JOINT UNLESS OVER 4 FEET THEN SUPPORT EACH JOINT. MAXIMUM SPACING FOR GRAVITY SUPPORTS IS 8-FEET. MAXIMUM SPACING FOR TRANS. BRACING IS 21-FEET. MAXIMUM SPACING FOR LONG. BRACING IS 40 FEET.

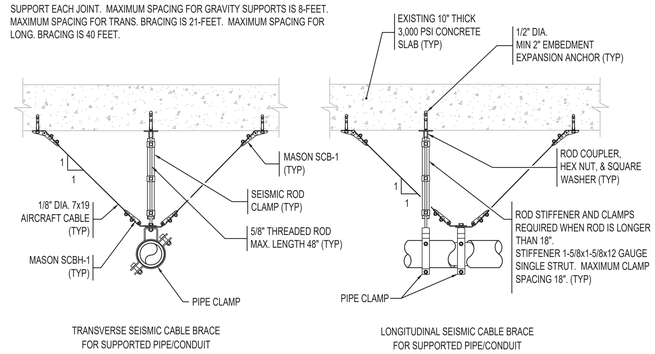

14 PIPE HANGER

NTS

NOTE: BRACING NOT REQUIRED WHEN DISTANCE BETWEEN TOP OF PIPE AND SUPPORTING STRUCTURE IS 12" OR LESS AND HANGER RODS ARE 3/8"Ø OR 1/2"Ø WITH SWIVEL CONNECTIONS. MAXIMUM PIPE SIZE IS 4" AND MAXIMUM SUPPORTED WEIGHT FOR THIS DETAIL IS 110 LBS.

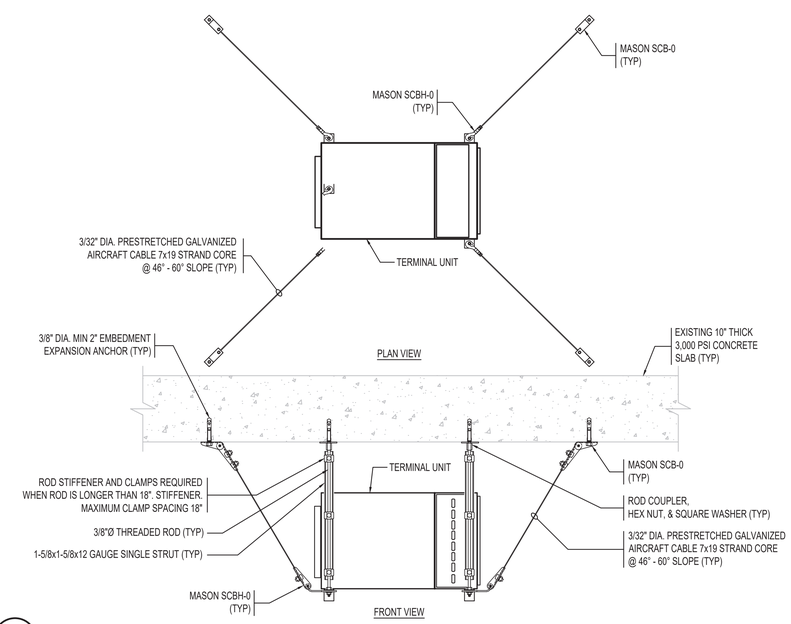

40 TERMINAL UNIT SUPPORT

NTS

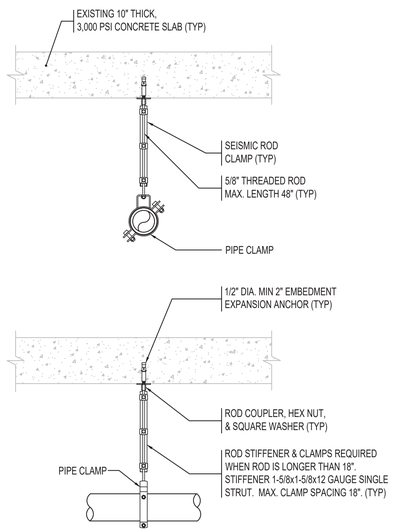

NOTES:

1. SUPPORT PIPE AT EVERY OTHER JOINT UNLESS OVER 4 FEET THEN SUPPORT EACH JOINT. MAXIMUM SPACING FOR GRAVITY SUPPORTS:
   1/2" PIPE = 6 FEET.
   3/4" PIPE = 7 FEET.
   1" PIPE = 8 FEET.
2. SEISMIC BRACING NOT REQUIRED FOR ≤ 2" DIAMETER COPPER PIPE.

25 PIPE HANGER

NTS

SUPPORT CAST IRON PIPE AT EVERY OTHER JOINT UNLESS OVER 4 FEET THEN SUPPORT EACH JOINT. MAXIMUM SPACING FOR GRAVITY SUPPORTS IS 8-FEET. MAXIMUM SPACING FOR TRANS. BRACING IS 10-FEET. MAXIMUM SPACING FOR LONG. BRACING IS 20 FEET.

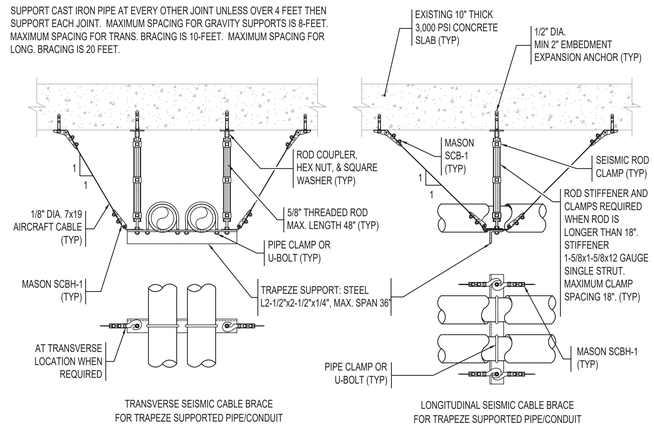

NOTE: BRACING NOT REQUIRED WHEN DISTANCE BETWEEN TOP OF TRAPEZE AND SUPPORTING STRUCTURE IS 12" OR LESS, HANGER RODS ARE 3/8"Ø OR 1/2"Ø WITH SWIVEL CONNECTIONS. ALL PIPES ARE SIZE 2" OR SMALLER, AND WEIGHT SUPPORTED BY A SINGLE TRAPEZE IS 100 LBS OR LESS.

15 PIPE TRAPEZE

NTS

VENTURA COUNTY HEALTH CARE AGENCY

PUBLIC WORKS VENTURA COUNTY

ENGINEERING SERVICES

RASMUSSEN & ASSOCIATES
Architecture
Planning
Interiors
21 S. California Street
Fourth Floor
Ventura, California 93001
(805) 648-1234

IRJ ENGINEERS, INC.
MECHANICAL & ELECTRICAL ENGINEERS
4517 MARKET STREET, SUITE 1B VENTURA, CALIFORNIA 93003
(805) 642-2355

FOR PLAN REVIEW ONLY

PROFESSIONAL SEALS

PERMIT APPROVAL STAMP

REVIEWED IN ACCORDANCE WITH THE REQUIREMENTS OF T24, CCR
APPROVED
Department of Health Care Access and Information
FACILITIES DEVELOPMENT DIVISION
9/28/2022, 3:17:57 PM
H202495-56-00
Laura Baldrati

PERMIT NO HCAI #H202495-56-00

NO	REVISION	DATE
△		

PUBLIC WORKS PROJECT MANAGER

CONSULTANT PROJECT MANAGER
Jay Lomagno

DRAWN BY	CHECKED BY
CONSULTANT JOB NO A000495	DATE 06/15/2022

PROJECT TITLE AND ADDRESS

VENTURA COUNTY MEDICAL CENTER PEDIATRIC UNIT

300 HILLMONT AVE
VENTURA, CA 93003

COUNTY SPEC NUMBER CP21-04

COUNTY PROJECT NUMBER P6T20009

COUNTY DWG NO — SHEET 47 OF 89

SHEET TITLE
MECHANICAL DETAILS

SHEET NO
M5.2

DIVISION 23
HEATING, VENTILATING, AND AIR CONDITIONING (HVAC) SPECIFICATIONS

I. GENERAL

1.01 The scope of work consists of complete and operating HVAC and mechanical piping systems for the remodel area including:
A. Furnish and install HVAC system components including all ductwork, piping, controls, appurtenances, and supports as required for an operating system. Relocate equipment and components as required.
B. Remove abandoned supports, piping, and ductwork.
C. Verify operation and performance of systems. Test all systems for leaks.
D. Provide connections to Agency furnished equipment.

1.02 Comply with the current applicable codes and regulations including, but not limited to, the 2019 California Building and Mechanical Codes.

1.03 Perform work in accordance with the referenced standards:
A. Air Conditioning, Heating, and Refrigeration Institute (AHRI).
B. Air Moving and Conditioning Association (AMCA).
C. American National Standards Institute (ANSI).
D. American Society of Heating, Refrigerating and Air Conditioning Engineers, Inc. (ASHRAE).
E. American Society of Mechanical Engineers (ASME).
F. American Society for Testing Materials (ASTM).
G. Associated Air Balance Council (AABC).
H. American Welding Society (AWS).
I. Manufacturer's Standardization Society (MSS).
J. National Electrical Manufacturers Association (NEMA).
K. National Fire Protection Association (NFPA).
L. Sheet Metal and Air Conditioning Contractors National Association (SMACNA).
M. Underwriters Laboratories, Inc. (UL).

1.04 All equipment, devices, and control panels furnished as part of this work shall be listed, labeled, or certified for the intended use by a Nationally Recognized Testing Laboratory as recognized by the United States Department of Labor, Occupational Safety, and Health Administration.

1.05 Coordinate working hours with the Agency to minimize the impact the construction will have on the facility's occupants, staff, and operations. Follow phasing instructions and minimize downtime. Provide temporary connections to systems so that completed work can be placed into service and completed areas occupied. Coordinate this work with the activities of the facility maintenance staff.

1.06 Submit complete copies of technical data, product data, shop drawings, schematics, wiring diagrams, and installation and startup instructions for all products and materials that will be used on this project. Submittals shall be searchable pdf files. Scans of paper documents are unacceptable. Submittals shall be marked with specification reference and equipment or device tag number and shall identify specific materials submitted and options selected. Submit evidence that equipment furnished as part of this work is listed, labeled, or certified for the intended use. Submit scaled shop drawings of ductwork including duct sizes, locations, elevations, slopes of horizontal runs, wall and roof penetrations, and equipment connections. Submit scaled coordination drawings, minimum scale of 1/4"=1'-0", detailing major elements, components, and systems of mechanical equipment and materials in relationship with other systems, installations, and building components. Coordination drawings shall indicate locations where space is limited for installation or access and where sequencing and coordination of installations are important for the efficient flow of the work.

1.07 Submit operating and maintenance manuals for all equipment and devices installed as part of this project. Manuals shall be searchable pdf files with appropriate bookmarks. Include control diagrams with the operating and maintenance manuals. Provide training for the Agency's staff in the operating and maintenance of the exhaust fans, variable frequency drives, airborne infection isolation room pressure monitors, air flow meters, and mechanical control systems. Schedule training at a time selected by the Agency. Submit a receipt, signed by the Agency, indicating that the training has been completed successfully.

1.08 The Agency shall obtain the building permit from HCAI. Work shall not commence until a valid building permit has been issued. Additional permits related to this Work shall be obtained by the Contractor.

1.09 Review contract documents and technical specifications for extent of work, phasing conditions, relationship of demolition, and work to be provided. Examine all existing conditions at building site. Verify all dimensions by field measurements. The drawings indicate diagrammatically the general layout of the mechanical systems and the locations of the related equipment and components. Do not fabricate any work using these documents as the only reference.

1.10 Drawings and Specifications are intended to be fully cooperative and to agree. The Contractor shall notify the Engineer at once if any discrepancy or apparent difference is observed. Clarifications of the Drawings and Specifications shall be by the Engineer.

1.11 While work is in progress, except for designated short intervals during which connections are made, continuity of service shall be maintained to all existing systems. Interruption of building services and utilities considered to be critical to the operation of the facility shall be performed only at approved times, during the hours from 12:00 midnight to 4:00 a.m., with a maximum interruption of four hours. Interruption of services and utilities considered to be non-critical may be performed during normal working hours at approved times and durations, unless noted otherwise. Prior to interrupting a service or utility, have adequate materials and labor readily available so that the work can be completed without delay and the service or utility restored within the approved schedule. Include required temporary provisions to maintain services and utilities that cannot be interrupted at any time. Submit request for interruption of service or utility a minimum of seven days prior to the planned interruption.

1.12 Coordinate mechanical equipment and materials installation with other building components. Arrange for chases, slots, and openings in other building components to allow for mechanical installations. Conceal work within finished spaces. Sequence, coordinate, and integrate installations of mechanical materials and equipment for efficient flow of the work.

1.13 Include the cutting and patching of building components to accommodate the installation of mechanical equipment and materials. Patching shall match existing surfaces for materials, finish, and color.

1.14 Where mounting heights are not detailed or dimensioned, arrange mechanical work and overhead installations to provide the maximum clearance possible.

1.15 Install mechanical equipment and systems to facilitate maintenance and repair or replacement of equipment components. Coordinate final locations for rough-ins with field measurements and with the requirements of the actual devices to be connected. Refer to contract documents for rough-in requirements. Coordinate the installation of mechanical materials and equipment with ceiling suspension system, luminaires, and other installations.

1.16 All material and equipment installed for this work shall be new unless indicated otherwise.

1.17 Provide complete and accurate record drawings both during construction and before final acceptance. All costs associated with the preparation of the record documents shall be included under this Work. Obtain at cost, from the Agency, a complete set of applicable full-size prints. Mark prints to indicate revisions to piping and ductwork, size and location, locations of control devices and similar units requiring periodic maintenance or repair, actual equipment locations dimensioned from column lines, actual dimensions of mains and branches of piping systems from column lines, and work included in Change Orders. Locate all cleanouts and indicate dimensions from columns or similar building elements. The Inspector of Record shall approve and sign the record prints. Submit neat and readable copies of these record prints for review and acceptance.

1.18 Deliver products to project properly identified with names, model numbers, types, grades, compliance labels, and similar information needed for distinct identification and adequately packaged and protected to prevent damage during shipment, storage, and handling. Store equipment and materials in an environmentally controlled area at the site, unless off-site storage is authorized in writing. Protect stored equipment and materials from damage. Piping supplied with plastic end caps shall remain capped to prevent entry of debris and moisture. End caps shall be maintained until piping is installed and connected.

1.19 Field prime and finish paint all exposed work of Division 23 that is not provided with a factory finish, except exposed copper piping, aluminum jacketed outdoor insulated piping, and exposed insulation. Painting shall be performed as specified in Division 9.

1.20 Contractor shall visit the job site before submitting a bid to determine the scope of the demolition work, and to become familiar with the existing conditions that affect the work and therefore the bid. Agency shall have first right of refusal of all salvageable materials demolished as part of this work. Contractor shall clean items claimed by the Agency and deliver them to an Agency selected storage location. Such materials not claimed by the Agency shall become the property of the Contractor and shall be removed from the site by the Contractor. Remove all equipment, materials, supports, and appurtenances for all items indicated demolished. Leave the area clean and suitable for the installation of the work. Areas vacated by equipment shall be left in a neat and safe condition. Maintain continuity of equipment, services, and all systems that will remain active. Remove all abandoned piping, ductwork, supports, equipment, and appurtenances, except where removal affects existing equipment and systems that remain. Cap open ends of piping and ductwork that remain. Perform all work required for relocation and extension of mechanical systems to clear the area of demolition and for the installation of this work. Legally dispose of all demolished materials, equipment, and debris.

1.21 Perform all mechanical tests as required or as directed including tests indicated by the installation instructions provided with the products and materials supplied. Provide all materials, labor, and equipment necessary for performance of these tests. At completion of the work, perform a complete "in-service" operation of all systems installed or modified as part of this work, to demonstrate compliance with the Drawings and Specifications. Replace any work shown to be faulty under test without additional cost.

1.22 Provide services of factory trained technicians for start-up of mechanical equipment, steam and condensate piping systems, and hydronic piping systems installed as part of this work. Submit written certification that start-up services have been performed and indicate the name(s) of personnel involved and the date(s) when services were performed.

1.23 Upon completion of the work, perform final cleaning. Clean the area of all debris. Remove shipping and other non-permanent labels. Wipe surfaces of mechanical materials, equipment, and devices clean. Clean all plumbing fixtures to a sanitary condition. Touch up paint on all finished surfaces. Clean the surfaces of the air distribution.

1.24 Provide a one-year material and labor warranty for all work of this project from the date of Agency acceptance. Warranty shall cover leaks, breaks, or failure to perform intended function. Submit written warranty statement. Provide extended warranties as indicated in General Conditions, Products and Materials paragraphs.

1.25 Electrical Installations for Mechanical Work:

A. Furnish and/or install, as part of the work of Division 23, electrical equipment for the systems as follows:
1. Furnish and install:
a. Motors.
b. Low voltage control devices.
c. Low voltage transformers.
d. Low voltage (under 30 volts) wire and conduits as well as connection to devices.
e. Conduit and wire for electronic systems (except line voltage).
f. All electrical work under items b. through e. above shall be performed under Division 26 or by the Division 23 controls system installer but shall be paid for and coordinated under Division 23 work.
2. Furnish only:
a. Motor starters, combination starter disconnects, and disconnect switches that are furnished with equipment controlled.
b. Line voltage control equipment, H.O.A. switches, pressure switches, airflow switches, control transformers, relays, thermostats, etc.
B. Furnish and/or install equipment for Division 23 as part of the work of Division 26 as follows:
1. Furnish and install:
a. Complete line voltage conduit and wiring systems.
b. Line voltage circuit protection devices.
c. Line voltage switches for control of small motors, where indicated on the Drawings.
d. Line voltage disconnect switches as required. Refer to Division 23 specifications for disconnects furnished with equipment.
e. Motor starters and combination motor starter and disconnect switches, except where furnished with the equipment controlled.
2. Install equipment furnished under other work:
a. Line voltage control equipment, H.O.A. switches, pressure switches, control transformers, relays, thermostats, etc.
b. Magnetic motor starters, combination magnetic starters, and disconnect switches if specified as part of mechanical equipment.

II. PRODUCTS AND MATERIALS

2.01 Piping and Fittings
A. Aboveground Heating Hot Water Supply and Return:
1. Type L hard drawn seamless copper tubing conforming to ASTM B 88-2009. Fittings shall be wrought copper conforming to ANSI/ASME B16.22-2001 (R2010) with 95/5 solder joints. Flux for solder shall be water soluble and conform to ASTM B-813. As an alternate to copper tubing, piping may be Schedule 40 seamless black steel pipe conforming to ASTM A53-90a, Grade B. Fittings shall be Class 150 malleable iron threaded conforming to ASME B16.3.

2.02 Specialties
A. Dielectric Fittings: Electroplated steel or brass nipple with an inert thermoplastic liner and lead free construction. Manufactured in accordance with ASTM F1545 for continuous use at 300 psig and 225°F. Liner shall be NSF/FDA listed. Manufacturers: Perfection Corporation, Precision Plumbing Products, or equal.
B. Dielectric Unions: Unions shall be rated at 250 psig at 150ºF, 600 volts on a dry line with no flash over, and shall be designed to meet the requirements of ANSI B16.39. Manufacturers: Watts Regulator Co., Wilkins, or equal.
C. Unions for Copper Pipe: Cast brass, wrought copper tailpiece, bronze ring nut and thread piece, threaded joint.
D. Unions for Steel Pipe: Malleable iron class 150 for low pressure service and class 250 for medium and high pressure service, hexagonal stock, ball and socket joints, metal to metal bronze seating surfaces, and female threaded ends. Conforming to ASME B16.39.
E. Flanges for Copper Pipe: Class 125, copper alloy, cast flanges, sweat connection, conforming to MSS SP-106. Class 150, copper alloy, cast flanges, sweat or threaded connection, complying with ASME B16.24
F. Strainers: Y-pattern with size matching connecting piping. Screens shall be Type 304 stainless steel, with 20x20 mesh for sizes 2" and smaller and 0.045" perforations for sizes 2-1/2 and larger. Provide strainers with bronze body and minimum 125 psi working pressure rating for plumbing systems and hydronic systems. Strainer blowdown port shall be drilled, tapped, and plugged. Provide nipple, shutoff valve, hose thread connector, and cap in each blowdown port, minimum size 3/4". Manufacturer for Bronze Body Strainers: Mueller Steam Specialty or equal.
G. Access Doors:
1. Non-Rated Wall Access Doors: Door and frame fabricated from 16-gauge galvannealed steel with a prime coat finish. Frame 1" wide. Hinge is pivoting rod style for sizes smaller than 24" and piano style for doors 24" and larger. Latch is screwdriver operated. Manufacturer: Elmdor, Pottorff, or equal.
2. Non-Rated Ceiling Access Doors: Door and frame fabricated from 16-gauge galvannealed steel with a prime coat finish. Frame 1" wide. Hinge is pivoting rod style for sizes smaller than 24" and piano style for doors 24" and larger. Latch is screwdriver operated. Manufacturer: Elmdor, Pottorff, or equal.
3. Fire-Rated Ceiling Access Doors: Frame shall be 16-gauge steel with 1" flange. Door shall be double panel, minimum 20-gauge steel, with continuous piano type hinge, 2" thick insulation in door cavity, and screwdriver operated latch. Finish shall be prime coat suitable for painting. Underwriters Laboratory classification shall be 1-1/2 hours "B" Label conforming to ANSI-UL 108 Standard.

2.03 Valves
A. Ball Valves for Other Than Potable Water (2-1/2" and smaller): Bronze construction with three-piece body, blowout-proof stem, full port, bronze trim, and threaded ends. Rated at 150 psi saturated steam and 600 psi non-shock cold working pressure. Manufacturer: Nibco T-595-Y.
B. Bronze Gate Valves (2" and smaller): Bronze construction with solid wedge disc, rising stem, screw-in bonnet, gland packed, and threaded ends. Rated at 125 psi saturated steam and 200 psi non-shock cold working pressure. Manufacturer: Nibco T-111.
C. Bronze Globe Valves for Other Than Potable Water (2" and smaller): Bronze construction with renewable seat disc, integral seat, rising stem, screw-in bonnet, gland packed, and threaded ends. Rated at 125 psi saturated steam and 200 psi no-shock cold working pressure. Manufacturer: Nibco.

2.04 Meters and Gauges
A. Pressure and Temperature Gauge Fittings: Pete's Plug.
B. Calibrated Balance Valves: Provide calibrated balance valves with adjustment handle, pressure ports, and calibrated scale. Manufacturer: Bell & Gossett, Taco, or equal.

2.05 Supports and Anchors
A. Provide clevis type pipe supports with threaded rods and building attachments for suspended piping. Provide pipe clips where piping is mounted to the structure. Provide riser clamps for piping installed in the vertical position. Hangers, clips, and clamps shall be sized for the piping supported and any installed insulation and/or covering. Hangers, clips, and clamps for copper pipe shall be coated for copper service. Provide trapeze supports for multiple pipes installed along the same route. Provide calcium silicate inserts at supports for insulated piping. Manufacturer: B-line, Powerstrut, Tolco, or equal.
1. Hydronic System Piping shall have support spacing in accordance with the California Mechanical Code.
B. Provide 12-gauge steel, metal framing channel with hot-dipped galvanized finish for exterior installations and epoxy paint for interior installations. Paint cut ends of channel with cold galvanizing paint for exterior installations and epoxy paint for interior installations. Provide fittings with hot-dipped galvanized finish for exterior installations and epoxy paint for interior installations. Fasteners shall conform to ASTM A307. All fasteners shall be grade-2 or higher and shall be tightened to manufacturer's recommended values. Minimum torque for 3/8" diameter bolts is 19 ft-lbs. Minimum torque for 1/2" diameter bolts is 50 ft-lbs. For exterior installations provide fasteners with a hot-dipped galvanized finish or provide ASTM A240 Type 304 stainless steel fasteners. Manufacturer: B-Line, Power-Strut, or equal.
C. Provide dielectric isolation between piping and supports using formed metal and felt isolators.
D. Expansion Anchors: Concrete expansion type anchors shall be Hilti KWIK Bolt TZ2 Wedge anchors. Masonry expansion type anchors shall be Hilti KWIK Bolt TZ2 Wedge for grout filled masonry. Allowable shear and tension values for each anchor shall comply with the latest ICC-ES Evaluation Report for the specific anchor. Provide anchors with diameter and minimum embedment as required by the loads and as indicated on the drawings. Coordinate expansion anchor specification, embedment, and testing with detail 4 on drawing S-1.10.

2.06 Insulation
A. Pipe Insulation Materials.
1. Fiberglass Pipe Insulation: Provide insulation with all-service jacketing conforming to ASTM C547, Type I, and ASTM C1136, Type I, with conductivity per ASTM C335 and UL labeled Flame Spread Index of 25 or less and Smoke Developed Index of 50 or less per ASTM E84. Insulation minimum density 3.5 pcf. Insulation shall be as follows:
a. Heating hot water supply and return piping: Temperature range 141 to 200 degrees F. Mean rating temperature 125 degrees F, conductivity of 0.255 Btu-inch per hour per square foot per degree F.
b. Drain piping conveying hot liquids: Temperature range 105 to 140 degrees F. Mean rating temperature 100 degrees F, conductivity of 0.240 Btu-inch per hour per square foot per degree F.
c. Manufacturer: Owens Corning Insulating Systems, LLC, Johns Manville, or equal.
B. Duct Insulation Materials.
1. Flexible Fiberglass Blanket Duct Insulation: Provide insulation with FSK facing conforming to ASTM C1290 Type 75, 100, and 150; ASTM C553 Type I, II, and III; and ASTM C1136, Type II with conductivity per ASTM C518 and UL labeled. Flame Spread Index of 25 or less and Smoke Developed Index of 50 or less per ASTM E84. Insulation conforms to the requirements of NFPA 90A and 90B. Insulation density and conductivity (at 75 degrees F) at compressed thickness as follows:
100 pcf 0.250 Btu-inch per hour per square foot per degree F.
2. Manufacturer: Owens Corning Insulating Systems, LLC, Johns Manville, or equal.
C. Insulation Accessories: Provide staples, bands, wires, tape, anchors, corner angles, PVC fitting covers and similar accessories as recommended by insulation manufacturer for applications indicated or as specified in III Execution.
D. Insulation Compounds: Provide cements, adhesives, coatings, sealers, mastics, protective finishes, and similar compounds as recommended by insulation manufacturer for applications indicated.

2.07 Hydronic Specialties
A. Manual Air Vents: Ball valves, as specified for the piping system, with hose thread outlets, caps, and chains.
B. Automatic Air Vents: Provide bronze body with non-ferrous internal parts that is designed to vent air automatically by the float principle. Body shall have a 1/2-inch threaded inlet connection and a 1/4-inch threaded outlet connection. Vent shall be rated with a maximum working pressure of 150 psig at 240 degrees F operating temperature. Manufacturer: Armstrong Machine Works, Hoffman, or equal.

2.08 Fans
A. Centrifugal Vent Set: Provide a single-width, single-inlet, backward inclined flat blade, belt-driven, centrifugal vent set. Fan shall be manufactured in an ISO 9001 certified facility. Fan shall be listed by Underwriters Laboratories in conformance with UL 705. Fan shall bear the AMCA Certified Ratings Seal for Sound and Air Performance. Fan performance shall be as indicated on the drawings. The housing shall be able to be rotated in the field to eight discharge positions.
1. Construction shall be bolted and welded utilizing corrosion resistant fasteners. The scroll wrapper and the scroll side panels shall be minimum 14 gauge steel. The entire housing shall have continuously welded seams. The housing shall include a performance cut-off baffle to prevent recirculation of the air within the housing. Bearing support shall be 10-gauge welded steel. Fan shall include a weather cover with latched side access inspection ports for the motor compartment. Lifting lugs shall be included. Provide an engrave nameplate indicating fan performance and model number. The fan shall be shipped in ISTA Certified Transit Testing Packaging.
2. Fan shall be protected by a minimum 2 mil thick baked powder coat polyester finish that is electrostatically applied. The coating must exceed 1,000 hour salt spray test per the ASTM B117 test method.
3. Fan wheel shall be centrifugal backward inclined, constructed of steel, with a precision machined Wheel shall be balanced in accordance with AMCA Standard 204-96.
4. Motor shall be heavy duty type with permanently lubricated sealed ball bearings, NEMA Design B, with Class B insulation. Motor shall be furnished at specified voltage with TEFC housing. Motor shall be inverter duty rated.
5. Blower shaft shall be AISI C-1045 hot rolled and accurately turned, ground, and polished. Shaft shall be sized for a critical speed at least 125-percent of the maximum RPM. Bearings shall be heavy duty regreaseable roller type in cast iron pillowblock housing selected for L10 life in excess of 200,000 hours at maximum cataloged operating speed. Belts shall be oil and heat resistant, static conducting. Drives shall be precision machined cast iron type, keyed and securely attached to the fan wheel and motor shafts. Drives shall be sized for 150-percent of the installed motor horsepower. The motor drive shall be variable pitch and factory set at the scheduled RPM.
6. Fan shall be furnished with shaft grounding ring, reduced wheel width (35-percent), special seismic certification, steel access door with hinge, steel flanged inlet, steel flanged outlet, inlet and outlet companion flanges, inlet and outlet flexible duct connections, OSHA belt guard with access door, shaft seal, extended lube lines, belt tensioner steel channel isolation rails with powder coat finish, Kinetics Noise Control model SRS2-135 seismic spring isolators with 1" deflection (four per fan), and a spare belt set.
B. Manufacturer: Loren Cook Company, Twin City Fan Companies, Ltd., or equal.

2.09 Air Filters
A. Prefilters: Provide factory fabricated, replaceable, dry, pleated media air filters in the sizes and efficiencies indicated. Filters shall meet or exceed the indicated efficiencies in accordance with ASHRAE Test Standard 52.2-2007. Filters shall be listed as UL 900. Enclosing frame shall be high wet-strength beverage board. The media shall be chemically bonded to the enclosing frame and wire support grid. Install in holding frames with factory recommended fasteners. Manufacturer: Camfil, American Air Filter, or equal.
B. Final Filters: Provide factory fabricated, replaceable, dry, extended surface air filters in the sizes and efficiencies indicated. Filters shall meet or exceed the indicated efficiencies in accordance with ASHRAE Test Standard 52.2-2007. Filters shall be listed as UL 900. Enclosing frame shall be fabricated from impact-resistant plastic with plastic media supports. The media shall be high-volume, microfine glass fiber that is chemically and mechanically bonded to the enclosing frame. Install in holding frames with factory recommended fasteners. Manufacturer: Camfil, American Air Filter, or equal.
C. Filter Housing: Provide factory-assembled side servicing housings with flanges for insertion into ductwork system as indicated. Construct of 16-gauge galvanized steel. Provide integral pre-filter tracks to accommodate 2" throw-away or cleanable filters. Provide access doors with continuous gasketing on perimeter and positive locking devices. Incorporate positive-sealing gasket material on channels to seal top and bottom of filter cartridge frames to prevent bypass. Arrange so filter cartridges can be loaded from either access door. Provide factory recommended hardware and filter fasteners necessary for field assembly. Manufacturer: Camfil, American Air Filter, or equal.
D. Air Filter Gauges: Provide weatherproof differential air pressure gauge with frictionless jeweled bearing movement, die-cast aluminum housing and bezel, white faceplate with litho-printed scale, and acrylic cover. Gauge ranges shall be selected so that scheduled filter final air pressure drop is approximately 75- percent of the full-scale reading. Furnish gauges with air filter gauge kits that include mounting bracket, aluminum tubing, pressure tips, vent valves, and compression fittings. Provide gauges with adjustable signal flags. Mount filter gauges on outside of filter housing or filter plenum, in accessible position. Adjust gauges for accurate readings. Set signal flags at final filter pressure drops indicated on Drawings. Manufacturer: Dwyer Instruments, Inc., no known equal.

2.10 Ductwork
A. Construct rigid ducts using ASTM A653M-2003 G90 sheet metal in accordance with recommendations of the ASHRAE Guide, SMACNA 1985 HVAC Duct Construction Standards Metal and Flexible, NFPA 90A, and the California Mechanical Code. Turn all exposed edges for both strength and appearance, fit the sheet metal closely and neatly together, and furnish all necessary ribs, cleats, stiffeners, and other reinforcements required to make all sections rigid and substantial. Cross-break all flat surfaces for stiffening. Seal all seams and joints. Rectangular duct joints shall be flush, drive-slip where required for reasons of space limitations, otherwise standing seams. Construct radius elbows with inside radius not less than duct width. Adjustable elbows are not acceptable. Provide rectangular and square elbows with turning vanes. All exposed ductwork in finished spaces shall be fabricated from smooth and clean sheet metal stock with no visible imperfections in finish. Clean all labels and mill identification from exposed ducts in finished spaces.
B. Flexible Ducts: Flexible ducts shall consist of an exterior reinforced vapor barrier (maximum 0.10 perms), minimum 1-1/2" thick fiberglass insulation, minimum R = 8.0 (outside, attic, equipment rooms, etc.) 4.2 (ceiling space, conditioned space, etc.) (hr sq. ft. °F)/Btu in. at 75ºF, encapsulated steel wire helix, and impervious, smooth, non-perforated interior polymer liner. Individual lengths of flexible duct shall contain factory fabricated steel connection collars. The maximum length shall be seven feet. Flexible ducts shall be limited to use at the terminal ends of the duct system only. Flexible ducts shall conform to UL-181.
C. All indicated duct sizes are inside, free area, dimensions. Fabricated ductwork dimensions shall be increased to provide inside free area dimensions wherever duct lining is indicated.

2.11 Ductwork Accessories
A. Balancing Dampers: Round ducts and rectangular ducts with maximum dimension 16" or smaller, butterfly type with quadrant locks and fabricated according to SMACNA standards. Rectangular ducts with maximum dimension greater than or equal to 17", Ruskin, Pottorff, or Air Balance Inc. opposed blade configuration with quadrant locks.
B. Remote Damper Operators: Provide remote damper operator assembly consisting of control shaft connection, cable, and remote operator. Control shaft connection shall be 3/8-inch x 3-inch long arm/screw drive assembly with square drive axle for connection to damper shaft all mounted on a stand-off bracket for connection to ductwork. Cable shall be sheathed steel wire. Remote operator shall be Allen hex head drive for ceiling mounting with steel bracket and nickel-plated steel finishing plug. Manufacturers: Pottorff Co., Inc., Young Regulator Co., or equal.
C. Turning Vanes: 1-1/2" wide blades at 3/4" on center with center support bars and vane rails for anchoring to the ductwork. Install vanes in all rectangular ducts turns greater than 30 degrees.
D. Flexible Duct Connections: Provide flexible connections between ductwork and air moving equipment. Connections shall be constructed out of Hypalon coated woven fiberglass fabric crimped into galvanized sheet metal flanges. Minimum fabric weight shall be 24 ounces per yard. Fabric shall comply with NFPA 701 and shall be UL Classified. Manufacturers: Duro-Dyne or Ventfabrics.
E. Duct Access Doors: Galvanized steel construction, 22-gauge frame, 24-gauge door, zinc plated piano hinge, and ventlock style latch. Provide latch on doors with hinge side dimension of 14 inches or less. Provide a minimum of two latches on doors with hinge side dimension greater than 14 inches. Access doors installed in insulated ducts shall be double wall construction with 1-inch thick fiberglass insulation in the core.
F. Combination Fire/Smoke Dampers: Provide combination fire/smoke dampers of ratings, types, and sizes indicated. Construct frame of minimum 13-gauge, hat-shaped channel, roll-formed galvanized steel with interlocking gusseted corners. Construct blades of 6-inch wide x 16-gauge, roll-formed, galvanized steel with reinforcing cross breaks. Axles shall be 1/2-inch diameter, hex-shaped, plated steel, mechanically attached to the blade. Bearings shall be self-lubricated, stainless steel sleeve type in extruded hole in frame. Linkage shall be plated steel and concealed within the frame. Blade edge seals shall be silicone rubber permanently bonded to the blade. Jamb seals shall be flexible, compression-type, stainless steel. Fire closure device shall be resettable with a release temperature of 165 degrees F (74 degrees C). Provide minimum 20-gauge, galvanized steel, factory fabricated sleeves and round or flat oval transition caps as required. Manufacturer: Pottorff, Greenheck, Ruskin, or equal.
G. Damper Actuator: Electric, 120-volt, two-position, fail close, spring return, actuator that is designed to operate combination fire/smoke dampers. Actuator shall be 120-volt with NEMA Type 1 zinc coated steel housing, auxiliary switches, permanently lubricated steel gears, position indicator, electronic overload protection, automatic restart, electrically double insulated, and grounded enclosure. UL listed to UL 873. Actuator power characteristics shall be as scheduled. Actuator shall have sufficient torque to open the damper in less than 15-seconds and spring-close the damper in less than 15-seconds. Manufacturer: Belimo, no known equal.
H. Air Flow Switch: Differential pressure airflow switch with steel housing, 1/2-inch conduit knockout, diaphragm, terminal block, SPDT switch, electrical rating 0.5 amps @ 125-volts, and compression-type air connections. Adjustable setpoint range 0.05-inches to 12.0-inches water column, differential 0.02-inches to 0.8-inches. UL Recognized and CSA Approved. Manufacturer: KMC Controls, Johnson Controls, Honeywell, or equal.
I. Adjustable Extractors: Zinc coated steel construction with curved blades. Blades are parallel, gang-operated, with spacing on 1-inch or 2-inch centers, as required for installation. Pivot action from full open to full closed, where blades overlap each other. Each extractor is furnished with an adjust rod and ball lock to permit adjustment from duct exterior and to lock the extractor in place after adjustment. Manufacturer: Anemostat (A Mestek Company), Price Industries, or equal.

2.12 Air Terminal Units
A. Basic unit includes
xx. Manufacturers: Price or equal.

2.13 Reheat Coils
A. One row or two rows, same end connections, steel headers, aluminum fins, copper tube, and duct flanges. Provide reheat coils with capacity and performances as scheduled. Casings shall be minimum 16-gauge galvanized steel. Tubes shall be 5/8" diameter, 0.024-inch wall thickness, copper expanded into the tube collars in the fins for permanent fin-tube bond. Maximum working ratings: 200 psig at 250ºF. Manufacturer: Trane, Carrier, or equal.

2.14 Variable Frequency Drives:
A. Provide variable frequency drives (VFD) in accordance with the schedule on the drawings and these specifications. Drives shall consist of pulse width modulated inverter design for use with synchronous and permanent magnet motors. Drive manufacturer shall supply the drive and all necessary options. The drives shall be UL labeled as a complete assembly. The base VFD shall be UL listed for 100 degrees KA SCCR and shall be seismically certified and labeled in accordance with the 2018 International Building Code. Referenced standards include IEEE 519-2014; UL 508, 508A, 508C, 61800, 61800-5-1, 61800-5-2, and 1995; NEMA ICS 7-2014; EN/IEC 61800; NEC 430.120; CSA C22.2 No. 274. The drive package shall be in enclosed in a UL Type enclosure that is completely tested by the manufacturer to ISO9001 standards. The drive shall provide full rated output from a line of +10% to -15% of nominal voltage and shall continue to operate, without faulting, from a line of +25% to -35% of nominal voltage. Ambient temperature of 5 to 104 degrees F. Altitude 0 to 3,300 feet above sea level. Humidity 5 to 95%, non-condensing. Drives shall use a keypad interface that has plain English text. Safety interlocks and run permissive status shall be displayed. The drive control panel shall use navigation keys, H-O-A selections, manual speed control, fault reset, and help keys. The control panel shall display output frequency, output current, reference signal, drive name, time, operating mode, and status.
B. The bypasses shall use a keypad interface and include the following: six digital inputs, five Form C relay outputs, drive isolation fuses, protection from operation with single phase input, and standalone operation. Bypasses shall include the following software features: loss of load, rum permissive, alarm status monitoring, manual or automatic transfer, supervisory control, and selectable overload protection.
C. The drive and bypass shall include network communications via BACnet, MS/TP, Modbus, and Johnson Controls N2 as standard. The bypass relay output status, digital input alarms, warnings, and fault information shall all be monitored over the network.
C. A toll-free 24/365 technical support telephone number connected to factory support located in the United States and Canada shall be available. Training shall include installation, programming, and operation of the drive, bypass, and communications equipment. Warranty shall be 30 months from the date of shipment from the factory and shall include parts, on-site labor, travel time, travel costs, or replacement of the complete drive as determined by the manufacturer's technical support.
D. Manufacturer: ABB, Danfoss, or equal.

2.15 Air Flow Meters:
A. General: Provide probe and sensors as scheduled with an installed accuracy of ±3% of reading using a sensor node averaging method. Airflow shall be established by independent, arithmetic average. Meter shall be temperature independent with a velocity weighted average. Meter shall be UL listed to UL: UL 60730-1 and CAN/CSA-E60730-1-15 Meter shall be BACnet compatible and shall comply with Part 15 of the FCC rules.
B. Environmental Limits: -20 to 160 ºF [-28.9 to 71.1 ºC], 5 to 95% RH non-condensing.
C. Sensor Nodes: Individual sensing nodes with self-heated sensor, hermetically sealed, bead-in-glass thermistor probe, glass filled Polypropylene, water proof marine epoxy.
Power Requirements; 24 VAC (22.8 to 26.4 under load) @20V-A max. Gold-plated connector receptacle pins and PCB connections. One additional USB connection for thumb
drive data-logging of sensor node airflow rates and temperatures
D. Alarms: Low and/or high user defined setpoint alarm. Visual indications Analog signal output.
E. Manufacturer: Ebtron or equal.

2.16 Airborne Infection Isolation Room Pressure Monitors
A. Provide standard single room BACnet capable room pressure monitors for measuring low differential pressure in critical applications. Furnish with a backlit touchscreen LCD display that provides a graphic user interface. The monitors shall have built-in calibration features that only require zeroing when installed. The monitors provide digital inputs for door switches to avoid nuisance alarms. The monitors shall have state-of-the-art electronics with true differential pressure sensing technology and provide audible and visual signals of alarm conditions of alarm conditions with an alarm acknowledge button. The monitors shall have two-level password protection. Monitors include on-board dead-ended low differential pressure sensors to prevent contaminated air from passing through it. Furnish monitors complete with monitoring module, room pressure snubbers for differential pressure sensing, door switches, remote annunciators, Nylon tubing, required wiring, conduit, electrical boxes, and plaster rings for wall-mounted installation. Manufacturer: Setra Systems or equal.
B. Provide remote annunciator that monitors the operation of the room pressure monitors and reports alarm conditions with audible and visual signals. Annuciator shall include an alarm acknowledge button. Furnish annunciators complete with required wiring, conduit, electrical boxes, and plaster rings for wall-mounted installation. Manufacturer: Setra Systems or equal.
C. Door switches shall be recessed type, designed for steel doors and frames and equipped with 22-gauge 12-inch leads for connecting to the airborne infection isolation room pressure monitors. Switches shall be UL approved, fire rated to UL 10C, SPDT action, 3/4-inch diameter mounting hole, and door-mounted magnet. Color shall be black. Provide lifetime warranty. Manufacturer: George Risk Industries or equal.

2.17 Motorized Dampers:
A. Provide bubble-tight industrial control dampers designed for isolation and decontamination applications. Bubble-tight dampers shall have the lowest leakage ratings possible. Dampers shall be tested for bubble-tight leakage in accordance with AMCA 500-D up to 30 in. wg (7.5kPa). The damper frame is flanged for mounting and the blade seal shall be mechanically fastened to the
blade. The framed shall be 8-inch flanged steel channel with steel reinforced butterfly style blades, Silicone rubber blade seals, full open and full closed blade stops, solid plated steel axles, double gland axle seals, motorized actuator, relubricatable ball bearings with outboard mounting, and Hi-Pro polyester finish, gray color, two-year warranty. Manufacturer, Pottorff, Ruskin, or equal.

2.18 Air Outlets and Inlets
A. Diffusers: Provide diffusers as indicated on the drawings, constructed with steel backpans and removable perforated steel faces, and compatible with the ceiling system in which they are installed. The perforated faces shall be constructed of minimum 22-gauge with a 50-percent free area pattern and held in place with concealed spring clips. The perforated faces shall lie in the same plane as the bottom surface of the ceiling unless the diffusers are for surface mounting. Diffusers shall be equipped with four cores consisting of pattern control vanes that individually pivot to adjust air pattern from horizontal to vertical. The air pattern can be adjusted further by rotating the cores in the field to provide a 1-way, 2-way, 3-way, or 4-way air pattern. Provide volume dampers in the necks of the diffusers for minor air quantity adjustment. Finish shall be factory electro-coated, white. All surfaces behind face shall be painted flat black. Touch up scratches in field.
B. Ceiling Return and Exhaust Registers: Provide ceiling return and exhaust registers as indicated on the drawings, constructed with steel backpans and removable perforated steel faces, and compatible with the ceiling system in which they are installed. The perforated faces shall be constructed of minimum 22-gauge with a 50-percent free area pattern and held in place with concealed spring clips. The perforated faces shall lie in the same plane as the bottom surface of the ceiling unless the registers are for surface mounting. Provide volume dampers in the necks of the registers for minor air quantity adjustment. Finish shall be factory electro-coated, white. All surfaces behind face shall be painted flat black. Touch up scratches in field.
C. Wall Registers: Provide return and exhaust wall registers as indicated on the drawings constructed of steel with louvered faces, and compatible with the wall system in which they are installed. Registers shall have 45-degree fixed blades, heavy duty construction with 20-gauge steel frames, aerodynamic blades, 1/2-inch blade spacing, factory attached steel opposed blade damper, and mounting holes with matching screws.
D. Manufacturer: Anemostat (A Mestek Company), Carnes, or equal.

2.19 Mechanical Control System Components - Electronic
A. Controls shall be as indicated on the drawings and specified herein, electronic systems of control, complete with all accessories required to control the heating, ventilating, and air conditioning systems and produce the results shown schematically on the drawings. In addition to the controls regularly supplied with the units and equipment, provide all the controls as required. The actual design of the system shall conform to the requirements of the manufacturer supplying the materials, which shall submit detailed shop drawings, specifications, and written sequences of operation for review.
B. Temperature and pressure sensors shall be electronic, low voltage. Room sensor cover style and color shall be acceptable to the Engineer.
C. Provide all low voltage wiring for installation of controls and devices that are part of this work. All wiring shall be in conduit.
D. All devices except space sensors shall be installed in control panels. Assembled control panels, with all devices installed, shall be listed labeled or certified for intended use by a Nationally Recognized Test Laboratory (NRTL) as recognized by the U.S. Department of Labor Occupational Safety, and Health Administration.
E. Manufacturers: Alerton to match existing.

2.20 Mechanical Control System Components - Pneumatic
A. Controls shall be as indicated on the drawings and specified herein, pneumatic systems of control, complete with all accessories required to control the heating, ventilating, and air conditioning systems and produce the results shown schematically on the drawings. In addition to the controls regularly supplied with the units and equipment, provide all the controls as required. The actual design of the system shall conform to the requirements of the manufacturer supplying the materials, which shall submit detailed shop drawings, specifications, and written sequences of operation for review.
B. Control air piping shall be hard drawn copper with wrought copper fittings or type FR polyethylene tubing in metallic conduit.
C. Room thermostats shall be pneumatic two pipe type with tamperproof cover. Setpoint and temperature shall be concealed by the blank face of the cover. Thermostat cover style and color shall be acceptable to the Agency.
D. Provide modulating control valves with screwed type bronze body, rated at 250 psig, stainless steel stems, and serviceable stem, packing, and disc. Valve operator shall be pneumatic. Control valves shall be two ways or three ways as indicated on the drawings.
E. All devices except space sensors shall be installed in control panels. Assembled control panels, with all devices installed, shall be listed, labeled, or certified for intended use by a Nationally Recognized Test Laboratory (NRTL) as recognized by the U.S. Department of Labor, Occupational Safety, and Health Administration.
F. Manufacturers: Honeywell, Johnson Controls, or Robertshaw.

VENTURA COUNTY HEALTH CARE AGENCY

PUBLIC VENTURA COUNTY WORKS

ENGINEERING SERVICES

RASMUSSEN & ASSOCIATES
Architecture
Planning
Interiors
21 S. California Street
Fourth Floor
Ventura, California 93001
(805) 648-1234

JOB No. 2027-00
IRJ ENGINEERS, INC.
MECHANICAL & ELECTRICAL ENGINEERS
4517 MARKET STREET, SUITE 16 VENTURA, CALIFORNIA 93003
(805) 642-2300

FOR PLAN REVIEW ONLY
PROFESSIONAL SEALS

PERMIT APPROVAL STAMP
REVIEWED IN ACCORDANCE WITH THE REQUIREMENTS OF T24L CCR
APPROVED
Department of Health Care Access and Information
FACILITIES DEVELOPMENT DIVISION
9/28/2022, 3:17:57 PM
H202495-56-00
Laura Baldrati

PERMIT NO HCAI #H202495-56-00

NO	REVISION	DATE
△		

PUBLIC WORKS PROJECT MANAGER
CONSULTANT PROJECT MANAGER: Jay Lomagno
DRAWN BY
CHECKED BY
CONSULTANT JOB NO: A000495
DATE: 06/15/2022
PROJECT TITLE AND ADDRESS

VENTURA COUNTY MEDICAL CENTER PEDIATRIC UNIT

300 HILLMONT AVE
VENTURA, CA 93003

COUNTY SPEC NUMBER: CP21-04
COUNTY PROJECT NUMBER: P6T20009
COUNTY DWG NO
SHEET 48 OF 89
SHEET TITLE: MECHANICAL SPECIFICATIONS
SHEET NO: M6.1

III. EXECUTION

3.01 General

A. Install equipment, plumbing fixtures, trim, and appurtenances in strict accordance with manufacturer's directions and applicable code requirements. Exercise care during installation and avoid damaging finished surfaces of equipment, plumbing fixtures, trim, and appurtenances. Make connections using proper tools and do not leave marks on visible surfaces.

B. Install work uniform, level, and plumb in relation to lines of building. Do not install any diagonal or otherwise irregular work unless so indicated on Drawings or approved by the Agency.

3.02 General Piping Installation

A. Install pipe, tube, fittings, fixtures, and equipment in accordance with recognized industry practices, which will achieve permanently leakproof systems, capable of performing each indicated service without failure. Install each run with minimum joints and couplings. Align piping accurately at connections, within 1/16" misalignment tolerance. Use fittings for all changes in direction and all branch connections

B. Install piping at slopes required by code and as required for operation of the piping system. Install hydronic piping at a minimum uniform slope of 1-inch in 40-feet upward in the direction of flow.

C. Provide unions or flanges adjacent to each valve, at connections to each piece of equipment, at components that require removal for maintenance, and elsewhere as indicated.

D. Threaded joints shall be made with pipe joint compound. Comply with ANSI/ASME B1.20.1 for piping threading.

E. Solder joints shall be made with high temperature compounds. Clean surfaces to be joined of all oil, grease, and oxides. Ream all piping free of burrs. Clean socket of fitting and end of pipe thoroughly. After cleaning and before assembly, apply flux to joint surfaces and spread evenly. Brazing procedures shall conform to AWS "Brazing Manual".

F. Provide manual drains at low points in piping systems. Manual drain shall consist of a 3/4" ball valve, hose thread outlet, cap, and chain.

G. Clean exterior of piping systems and prepare for application of specified coatings. Flush piping for hydronic systems with clean water before proceeding with testing. Clean strainers after flushing.

H. Inspect each run of each system for completion of joints, supports, and accessory items. Inspect pressure piping in accordance with procedures of ANSI B31.9.

I. Test hydronic and drain piping in accordance with ANSI B31.9. Provide temporary equipment for testing including pump and gauges. Test each section of each piping system independently. Do not use system valves to isolate sections under test unless the valve is rated for the test pressure. Fill each section with water and pressurize for the indicated time. Test pressure shall be 50 psig greater than system operating pressure but not less than 100 psig. Test duration shall be a minimum of two hours. Observe each section for leakage. Test fails if leakage is observed or if pressure drop exceeds five percent of test pressure. Repair piping using specified materials. Stop leak and other temporary methods shall not be used. Upon successful completion of testing, drain water used during testing and refill the system with clean water.

J. During installation, provide caps covering all open ends of pipe until final connections are made to equipment and fixtures. Caps shall be tight fitting plastic and installed to keep the interior of the piping system free from contamination.

K. Dissimilar piping materials shall be isolated with dielectric fittings or unions.

L. Where pipes pass through fire rated walls, partitions, ceilings, or floors, the fire rated integrity shall be maintained. Provide firestopping as detailed and specified.

M. Provide access doors where valves and other devices that require maintenance are installed behind finished surfaces of walls and inaccessible ceilings.

3.03 Supports and Anchors

A. Supports for piping shall comply with the California Mechanical Code and other applicable codes. Support piping at each change in direction, at the bottom of risers, at drops, at connection to fixtures or equipment, and wherever necessary to maintain alignment and to prevent sagging, bending, or vibrating. Provide calcium silicate inserts at supports for insulated piping. Insert thickness shall match insulation thickness. Dielectrically isolate piping from supports fabricated from dissimilar metals.

B. Supports for ducts shall be in accordance with the California Mechanical Code and the SMACNA 1985 HVAC Duct Construction Standards Metal and Flexible. Maximum spacing between duct supports shall be 8 feet.

C. Provide seismic bracing for all ductwork and piping, as required by the California Building Code.

D. Support ductwork and piping directly from the building structure. Attach pipe supports to structure according to the seismic restraint data by the manufacturer. Provide anchors as required.

E. Existing piping and ductwork shall be supported from the structure in compliance with this specification and with the seismic requirements of the California Building Code when they are exposed as part of this work. Existing piping and ductwork include those items that are not affected directly by the work of this project.

3.04 Insulation

A. General Installation: Clean and dry all surfaces to be insulated prior to installing insulation.

B. Piping Insulation:

1. Insulate heating hot water supply and return piping and hot drain piping with:

a. Fiberglass Pipe Insulation:

Thickness	Pipe Size
1.5"	0" through 1-1/4"
2.0"	1-1/2" through 4"

2. Omit insulation on unions and flanges for piping carrying heating hot water.
3. Cover valves, fittings, and similar items in each piping system with equivalent thickness and composition of insulation as applied to adjoining pipe run. Install factory molded, precut or job fabricated mitered units (at Installer's option) except where specific form or type is indicated.
4. Provide all piping insulation with all service jacket, self-sealing lap, and PVC fittings covers. Vapor barrier shall be continuous. Seal all raw edges of insulation.
5. Extend piping insulation without interruption through walls, floors, and similar barriers except where otherwise indicated.
6. Insulation of pipes through rated walls shall conform to requirements for UL listed assembly number.
7. Patch existing insulation at points of connection for this work with materials and methods that match the existing installation. Patching shall provide continuous insulation and vapor barrier between existing installation and this work.
8. Repair insulation that is damaged by this work. Repair of insulation shall be performed with materials and methods that match the existing installation.

C. Ductwork Insulation

1. Insulate ductwork including all HVAC supply, return, intake, and relief ductwork and all diffuser necks and backpans with:

a. Flexible Fiberglass Blanket Insulation (1.0 PCF) for all concealed ductwork:]

Thickness	Application
3.0"	cold ductwork (below ambient) [2019 CEC]
3.0	dual temperature ductwork (above/below ambient) [2019 CEC]

2. Omit insulation on all lined return ductwork unless otherwise indicated.
3. Secure insulation to duct with mechanical fasteners on 18" centers (maximum). Seal all joints, fastener penetrations, and other breaks in vapor barrier with 3" strips of the same facing material adhered with vapor barrier adhesive. Vapor barrier shall be continuous. Seal all raw edges of insulation. Insulate the neck, backpan, back, and plenum of supply air diffusers so that no metal surfaces are exposed to the space above the ceiling.
4. Extend ductwork insulation without interruption through walls, floors, and similar barriers except where otherwise indicated.
5. Insulation of ductwork through rated walls shall conform to requirements for UL listed assembly number.
6. Patch existing insulation at points of connection for this work with materials and methods that match the existing installation. Patching shall provide continuous insulation and vapor barrier between existing installation and this work.
7. Repair insulation damaged by this work. Repair of insulation shall be performed with materials and methods that match the existing insulation.

3.05 Hydronic Specialties Installation

A. Install hydronic specialties in accordance with the manufacturer's installation instructions.
B. Install manual air vents at all high points in hydronic piping systems.
C. Install drain valves at all low points in hydronic piping systems.

3.06 Fans Installation

A. Install fans in accordance with the manufacturer's installation instructions.
B. Attached fans to bases, bases to spring isolators, and spring isolators to structure.
C. Adjust fans for quiet operation.

3.07 Filter and Housing Installation:

A. Anchor filter housing securely to substrate. Install filters in proper position to prevent passage of unfiltered air. Position housing so that sufficient space is provided for maintenance.
B. Operate installed air filters to demonstrate compliance with requirements. Test for air leakage of unfiltered air while system is operating. Correct malfunctioning units at site, then retest to demonstrate compliance; otherwise remove and replace with new units and proceed with retest.
C. Install new filters at completion of air handling system installation, and prior to testing, adjusting, and balancing work.
D. Provide one complete set of spare pre-filters. Deliver these spare filters to the Agency and obtain a signed receipt. Submit the receipt.

3.08 General Ductwork Installation

A. Coordinate the fabrication and installation of sheet metal ductwork with all other trades, with existing conditions, and as specified or shown on the drawings.
B. Ducts, branches, and risers shall be free-flowing, air tight, and constructed according to the drawings with full free area maintained throughout. Ducts shall be fabricated without obstructions or abrupt angles, unless specifically indicated on the drawings. If it is necessary to change the shape of any ductwork due to interference of other work, change to equal effective area as directed without extra cost. All transitions or angled offsets shall be less than 30º as measured from the duct centerline, unless specifically indicated on the drawings.
C. Provide fabricated sheet metal escutcheons where exposed to view ducts penetrate walls, ceilings, floors, and other surfaces, unless specific penetration details are shown on the drawings. Provide fabricated sheet metal escutcheons where concealed ducts penetrate wall surfaces unless specific details are shown on the drawings. Escutcheons shall match the material and gauge of the ducts and shall be sized to accommodate insulation on the exterior of the ducts. Escutcheons shall overlap the openings by at least 1-1/2". Fasten escutcheons to substrate
D. Provide temporary closures for all ductwork openings and equipment intakes and discharges during construction to prevent dust and debris from entering the systems. Maintain closures until connections are made. Where temporary closures cannot be installed, due to the equipment serving the ductwork remaining in operation, cover each opening with a disposable filter and seal the filter to the ductwork with tape or similar material. The disposable filters shall be rated at MERV 8 and they shall be replaced when they become loaded with dust.
E. Fabricate ducts in accordance with the SMACNA 1985 HVAC Duct Construction Standards Metal and Flexible using the 2" pressure class for supply, return, and exhaust air ducts within the building, 2" pressure class for exhaust air ducts on roof from shaft to upstream side of air filter housing, 10" pressure class for exhaust air ducts between filter housing and exhaust fan inlets, and 2" pressure class for exhaust air ducts downstream of the exhaust fans.
F. Install ducts in accordance with recommendations of the ASHRAE Guide, SMACNA 1985 HVAC Duct Construction Standards Metal and Flexible, NFPA 90A, and the State Fire Marshal.
G. Provide 45º entry at all rectangular branch duct take-offs.
H. Provide bell mouth entry at all round branch duct branch take-offs.
I. Seal all transverse joints, longitudinal seams, and duct wall penetrations with water-based, indoor/outdoor, duct sealant manufactured by Design Polymerics DP1020, Carlisle Hardcast Duct-Seal 321, Foster 32-19, or equal.
J. Paint the interior of all air inlet and outlet boxes and all ductwork visible through the air distribution faces with non-toxic flat black paint.
K. Fabricate and install uninsulated ductwork located outside the building and exposed to weather with sloped horizontal top surfaces so that water does not accumulate on the top of the ductwork.
L. Install flexible ducts in accordance with Section III of SMACNA "HVAC Duct Construction Standards, Metal and Flexible". Flexible ducts shall be supported at or near mid-length with 2" wide, 28-gauge, steel hanger collars attached to the structure with an approved duct hanger. Installation shall minimize sharp radius turns or offsets. Fasten flexible duct metal ends to ducts and devices with #10 sheet metal screws at 4 inches on-center around the duct, minimum four sheet metal screws per connection.

3.09 Ductwork Accessories Installation

A. Install balancing dampers at all branches serving two or more outlets, two or more inlets, and elsewhere as indicated or required to balance systems adequately. Do not use register or diffuser dampers for primary balancing of the systems, use for fine tuning only. Provide remote damper operator or ceiling access door for each volume damper installed above an inaccessible ceiling. Attach a fluorescent orange fabric ribbon to the quadrant handle of each damper installed in a concealed location. Ribbon shall be of sufficient length so that the location of the quadrant is visible from the location where the concealed space is accessed.
B. Flexible connections shall be installed partially compressed. Protect flexible connections installed outdoors with a galvanized steel sunshield.
C. Install combination fire/smoke dampers as indicated on the Drawings and in accordance with their listing. Dampers shall be installed square and free from racking. Provide labeled access door adjacent to damper for service and testing, where installed above an inaccessible ceiling. Provide labeled access door adjacent to duct-mounted smoke detector that activates damper, where installed above an inaccessible ceiling.

3.10 Air Terminal Unit Installation

A. Install air terminal units in accordance with the manufacturer's instructions. Install in locations and arrangements to provide access for periodic maintenance, including removal of actuators, coils, and accessories. Support unit and piping separately so that the weight of the piping system does not rest on the unit.

3.11 Reheat Coil Installation

A. Install reheat coils in accordance with manufacturer's installation instructions. Provide supply and return water connection complete with shut-off valves, unions, control valves, and balancing valves as required.

3.12 Variable Frequency Drives Installation

A. Install the variable frequency drive in accordance with the recommendations of the drive manufacturer as outlined in the drive installation manual. Power wiring shall be completed as specified. All wiring shall be installed in accordance with the recommendations of the drive manufacturer. Installation shall be in accordance with national, state and local building and electrical codes. Start-up shall be provided for each drive by a factory-trained, authorized, service provider.

3.13 Air Flow Meters Installation

A. Install air flow meters in accordance with the manufacturer's installation instructions. Mount components securely to structure. Provide boxes and other enclosures required for installation of these components. Install sensor wiring within conduit to protect it from damage.

3.14 Airborne Infection Isolation Room Pressure Monitors

A. Install air flow meters in accordance with the manufacturer's installation instructions. Mount components securely to structure. Provide boxes and other enclosures required for installation of these components. Install sensor tubing within conduit to protect it from damage.

3.15 Motorized Dampers Installation

A. Install motorized dampers in accordance with the manufacturer's installation instructions. Provide flanges for ducts connecting to dampers and install them parallel and plumb. Set dampers between flanges and tighten flange nuts so that the dampers are not distorted. Confirm that the dampers cycle freely in their sleeves. Test the operation of the dampers and confirm tight closure. Test the operation of the damper actuators and verify that they open and close the dampers fully.

3.16 Air Outlets and Inlets Installation

A. Install ceiling diffusers, registers, and grilles aligned with reflected ceiling. Where diffusers, registers, and grilles are installed in a lay-in ceiling the devices shall be centered within the grid so that the reveal is equal around all sides.
B. Support ceiling diffusers, registers, and grilles using slack galvanized wires attached to the structure and connected to tabs on the devices.
C. Install sidewall registers aligned with wall finish. Use finished screws to fasten registers to substrate. Heads of screws shall be painted to match the registers.

3.17 Mechanical Control System - Electronic Installation

A. Install controls to conform to the schematics on the drawings.
B. Controls shall operate according to the indicated sequence:

3.18 Mechanical Control System - Pneumatic Installation

A. The installations shall be made by the control manufacturer. Upon completion, the control manufacturer shall approve the controls and control systems to verify that they are correctly installed and functioning properly.
B. Control air tubing shall be installed in concealed spaces. The entire piping system shall be tested, prior to connecting to the existing pneumatic system, by placing it under a test pressure of 20 psi for 24-hours; the pressure drop during this period shall not exceed 3 psi. Test shall be witnessed by the Inspector of Record. Report the results of this pressure test. Report shall indicate date test was performed, measured pressure drop during test period, name of person performing test, and name of person witnessing test.
C. Support pneumatic tubing at four-foot intervals. Tubing may be supported from duct or pipe supports.
D. Controls shall operate according to the sequence on the drawings.

3.19 Labeling

A. General: Install labels for all systems and equipment installed as part of this work. Install labels upon completion of installation and after application of coatings. Label text shall match drawing designation or shall have designation as directed by the Engineer. Comply with ANSI/ASME A13.1 for lettering size, length of color field, colors, and viewing angles of identification of piping systems. Comply with ANSI Z535.1 for color codes used on accident prevention signs, labels, and tags. Submit product data for each type of label.
B. Aboveground Piping: Label aboveground piping with plastic pipe labels at 20-foot intervals along runs, at each valve, at each tee, at least once in every story traversed by risers, at each side of floor or wall penetrations, and at least once in or above every single room. Pipe label shall indicate fluid carried in pipe and direction of flow.
C. Valves: Label valves with brass valve tags fastened to the valve with brass chain. Valve tag shall indicate valve number and fluid carried in pipe.
D. Valve Schedule: Submit typewritten valve schedule that indicates valve number, piping system, valve type, valve size, location, and duty.
E. Ductwork: Label ductwork with stenciled signs at 20-foot intervals along runs, at each tee, at least once in every story traversed by risers, at each side of floor or wall penetrations, and at least once in or above every single room. Duct label shall indicate supply air, return air, exhaust air, outside air, etc. and direction of flow. Duct label letter height shall be minimum 1-1/4-inches.
F. Access Doors: Label duct access doors with stenciled signs indicating requirement for access. Label access doors in finished surfaces with engraved plastic tag with 1/8" high lettering. Fasten tag to door with stainless steel screws.
G. Equipment: Label each piece of equipment. Equipment label shall be engraved plastic tag with 1/4-inch-high lettering, fastened to the equipment with stainless steel screws.

3.20 Air and Water Testing, Adjusting, and Balancing

A. General: Perform air and water testing, adjusting, and balancing work in accordance with the referenced standards and the listed requirements. All costs for testing, adjusting, and balancing services shall be included under this work.
B. Qualifications: Work shall be performed by an independent testing, adjusting, and balancing company that specializes in the testing, adjusting, and balancing of air conditioning systems. The company shall be a member, in good standing, of the Associated Air Balance Council (AABC) or the National Environmental Balancing Bureau (NEBB). The instruments used for testing, adjusting, and balancing shall have been calibrated within a period of six (6) months prior to the start of testing, adjusting, and balancing work for this project and be so certified.
C. Submittals: Submit company data demonstrating compliance with the specifications including current certificates from the national association. Submit instrument calibration documentation with company data. Submit test report from survey of existing HVAC system prior to commencing any demolition or installation work. Submit test and balance report for demolition work prior to the start of installation work. Submit test and balance report for installation work prior to requesting final construction review. Submittals shall be searchable pdf files that are bookmarked. The bookmarks shall divide the submitted information into logical groupings. Reports shall conform to the following:
1. Report the result of all tests. Indicate the final flow quantities for each component and device. Indicate all operating parameters for each piece of equipment and for the system. Indicate all measured system operating temperatures and pressures. Reports shall be signed by a company representative certifying the results are accurate.
D. Existing Equipment: Schedule and coordinate all testing, adjusting, and balancing work that involves existing equipment with the facility maintenance staff. Provide seven days written notice prior to starting work. Confirm that each piece of equipment has been serviced, filters have been replaced, strainers have been cleaned (if required), controls have been adjusted to accommodate the air and water flows required for this project, and all components of the HVAC system are at optimum performance.
E. Survey of Existing HVAC System: Prior to demolition, test and report the air quantity for each existing air outlet and inlet shown on the Drawings. Perform duct traverses of the existing supply and return ducts that serve the first, third, and fourth floors. Perform duct traverses of the existing exhaust ducts that serve the basement, first, third, and fourth floors. Test and report the operation of each fan, air handling unit, fan coil unit, and air conditioning unit identified on the drawings. Report the results including any observed conditions that may affect the testing, adjusting, and balancing work.
F. TAB Procedures for Demolition Work: The testing, adjusting, and balancing work shall be performed in accordance with the procedures described in the AABC Test and Balance Procedures, as published by AABC and shall include, but not necessarily be limited to the following:
1. Test and adjust each diffuser, register, and grille shown on the Drawings to achieve the indicated air quantity. The permitted variance from the indicated air quantity is +/- 5-percent. Tabulate test data and report results. Identify each diffuser, register, and grille as to area served.
2. Test and adjust each fan and air-handling unit identified on the Drawings to achieve the indicated air quantities at the diffusers, registers, and grilles and the duct traverses performed as part of 3.20 E. Adjust fan speeds as required. Measure and record the equipment performance data. Tabulate test data and report results. Provide a static pressure profile drawing that indicates the measured static pressure across system components such as: fans, coils, filters, dampers, attenuators, etc.
G. TAB Procedures for Installation Work: The testing, adjusting, and balancing work shall be performed in accordance with the procedures described in the AABC Test and Balance Procedures, as published by AABC and shall include, but not necessarily be limited to the following:
1. Test and adjust each diffuser, register, and grille shown on the Drawings to achieve the indicated air quantity. The permitted variance from the indicated air quantity is +/- 5-percent. Tabulate test data and report results. Identify each diffuser, register, and grille as to area served. Adjust each diffuser and supply register and revise air discharge arrangement to minimize drafts. Adjust each diffuser, register, and grille to minimize noise produced by the HVAC system.
2. Test and adjust each fan and air-handling unit identified on the Drawings to achieve the indicated air quantities at the diffusers, registers, and grilles and the duct traverses performed as part of 3.20 E. Adjust fan speeds as required. Measure and record the equipment performance data. Tabulate test data and report results. Provide a static pressure profile drawing that indicates the measured static pressure across system components such as: fans, coils, filters, dampers, attenuators, etc.
3. Test and adjust each coil to achieve the indicated water quantities. Measure and record coil performance data including air and water temperatures and pressure drops. Confirm control valve shutoff by testing and recording upstream and downstream air temperatures when the valve is closed. Tabulate test data and report results.
4. Make all necessary control adjustments and balancing of flows, and then operate each system for a period of not less than two working days to confirm satisfactory performance. Should further adjustment prove necessary, repeat this work, as required, until a satisfactory result is obtained.
5. Test the operation of the temperature and pressure controls. Verify each control device maintains the indicated or required setpoint. Record setpoint and actual conditions for each control device. Vary the setpoint for each control device by plus and minus 5-percent and then confirm that device maintains the revised setpoint. Tabulate data and report results.
6. Test the operation of all duct-mounted smoke detectors. Measure the differential pressure across the sampling tubes in each detector to confirm that it is within the required range for the installed detector. Measure the air velocity within the duct. Tabulate data and report results including detector manufacturer and model number, duct size, required and measured pressure drop, and required and measured air velocity.
7. Test the operation of all variable frequency drives. Report the final static pressure setpoint for each drive that is required to achieve the required performance. Vary the setpoint for each drive by plus or minus 5-percent and then confirm that the drive maintains the desired setting. Report all drive parameters.
8. Repeat tests after corrective work has been performed to address deficiencies uncovered as part of this work. Tests shall be repeated until satisfactory results have been obtained.

3.21 HVAC Air Distribution System Cleaning

A. Summary: Clean HVAC system from each point where air enters system to each point where air is discharged from system. Clean existing supply, return, and exhaust ducts in the building and on the roof. Extent of this ductwork is shown on the drawings. Clean fans, air handling units, and air conditioning units identified on the drawings. Cleaning shall be performed after demolition is complete and prior to the installation of this work. Provide temporary closures for all ductwork openings and equipment intakes and discharges to prevent dust and debris from entering the system. Maintain closures until connections are made.
B. Quality Control: Work shall be performed in accordance with ACR-13, The NADCA Standard for Assessment, Cleaning, and Restoration of HVAC Systems, as published by the National Air Duct Cleaning Association (NADCA). Supervisor for this work shall be certified as an NADCA Air Systems Cleaning Specialist.
C. Submittals: Submit procedures for HVAC air distribution system cleaning. Include qualifications of the supervisor for this work. Submit report indicating that system has been cleaned successfully and is ready for use. Include in the report any system deficiencies observed during cleaning.
D. Cleaning Procedures: Protect existing installations from cleaning operations. Arrange for openings in ducts required to thoroughly clean the interiors. Cutting and patching for cleaning operations is part of the work. Provide required cleaning equipment and maintain this equipment in good order throughout the cleaning procedures. Cleaning shall be accomplished by source removal mechanical cleaning methods. Employ contaminant removal methods incorporating vacuum collection continuously during cleaning operations. Discharge exhaust from vacuum collection equipment outdoors. Perform the following cleaning operations:
1. Clean ducts to remove non-adhered substances. Use mechanical agitation to remove dust and debris. Capture dislodged material in vacuum collection equipment.
2. Clean fans, including blowers, fan housings, plenums, scrolls, blades, vanes, shafts, baffles, drive assemblies, and dampers.
3. Clean air handling units including fans, fan housings, casings, plenums, condensate drain pans, drive assemblies, and dampers.
4. Clean air conditioning units including fans, fan housings, casings, plenums, condensate drain pans, drive assemblies, and dampers.
5. Clean heat transfer coils including fins, tubes, and casings. Clean and flush condensate drain pan, on cooling coils, after coil cleaning is complete.
E. Inspection: Inspect HVAC air distribution system after cleaning work is complete. Repeat cleaning if contaminants are evident.

3.22 Duct Leakage Testing

A. Exhaust ductwork serving the airborne infection isolation rooms shall be leak-test in accordance with the SMACNA HVAC Air Duct Leakage Test Manual, 2nd Edition, 2012. The exhaust ductwork shall be tested from the inlet registers to the fan inlets. Testing shall be performed after all ductwork has been installed and sealed and after the ductwork is connected to the air filter housing. Positive pressure testing shall be permitted for negative pressure ductwork. The permitted leakage shall be not more than calculated by Equation 603.10.1 in the 2019 California Mechanical Code.

End of Division 23

VENTURA COUNTY
HEALTH CARE AGENCY

PUBLIC
VENTURA COUNTY
WORKS

ENGINEERING SERVICES

RASMUSSEN & ASSOCIATES
Architecture
Planning
Interiors
21 S. California Street
Fourth Floor
Ventura, California 93001
(805) 648-1234

IRJ ENGINEERS, INC.
MECHANICAL & ELECTRICAL ENGINEERS
4517 MARKET STREET, SUITE 16 VENTURA, CALIFORNIA 93003
(805) 642-2355
JOB No. 2027-00

FOR PLAN REVIEW ONLY
PROFESSIONAL SEALS

PERMIT APPROVAL STAMP
REVIEWED IN ACCORDANCE WITH THE REQUIREMENTS OF T24, CCR
APPROVED
Department of Health Care Access and Information
FACILITIES DEVELOPMENT DIVISION
9/26/2022, 3:17:57 PM
H202495-56-00
Laura Baldrati

PERMIT NO HCAI #H202495-56-00

NO	REVISION	DATE
△		

PUBLIC WORKS PROJECT MANAGER
CONSULTANT PROJECT MANAGER: Jay Lomagno
DRAWN BY | CHECKED BY
CONSULTANT JOB NO: A000495 | DATE: 06/15/2022
PROJECT TITLE AND ADDRESS

VENTURA COUNTY
MEDICAL CENTER
PEDIATRIC UNIT

300 HILLMONT AVE
VENTURA, CA 93003

COUNTY SPEC NUMBER: CP21-04
COUNTY PROJECT NUMBER: P6T20009
COUNTY DWG NO | SHEET 49 OF 89
SHEET TITLE: MECHANICAL SPECIFICATIONS
SHEET NO: M6.2

PLUMBING FIXTURES AND APPURTENANCES

UNIT TAG	FIXTURE	MINIMUM CONNECTIONS (IN.) S/W	VENT	DRAIN	CW	HW	FIXTURE DESCRIPTION	FIXTURE MANUF. & NO.	TRIM DESCRIPTION	TRIM MANUF. & NO.	REMARKS
WC 2	WATER CLOSET	4	2	-	1-1/4	-	VITREOUS CHINA, WALL HUNG, ELONGATED BOWL, TOP SPUD, COLOR: WHITE, ADA COMPLIANT. SEAT: CENTOCO 1500STSCC	AMERICAN STANDARD 3351.101	1.28 GPF BATTERY SENSOR FLUSH VALVE, ADA HEIGHT, CHROME PLATED.	SLOAN G2 8111-1.28	CARRIER: JR SMITH 0230Y (-M54-M58), 0210Y/0220Y (-M54-M58), WADE 350.
WC 3	WATER CLOSET	4	2	-	1-1/4	-	VITREOUS CHINA, WALL HUNG W/ SLOTTED RIM FOR BEDPAN HOLDING, ADA COMP., ELONGATED BOWL, TOP SPUD, COLOR: WHITE, SEAT: CENTOCO 1500STSCC	AMERICAN STANDARD 3352.101	1.28 GPF BEDPAN WASHER MANUAL FLUSH VALVE, CHROME PLATED	SLOAN BPW-1150-1.28	CARRIER: JR SMITH 0230Y (-M54-M58), 0210Y/0220Y (-M54-M58), WADE 350.
WC 4	WATER CLOSET	4	2	-	1-1/4	-	VITREOUS CHINA, WALL HUNG W/ SLOTTED RIM FOR BEDPAN HOLDING, ADA COMP., ELONGATED BOWL, TOP SPUD, COLOR: WHITE, SEAT: CENTOCO 1500STSCC	AMERICAN STANDARD 3352.101	1.28 GPF MANUAL FLUSH VALVE, CHROME PLATED, BED PAN CLEANER WITH PEDAL VALVE, ELEVATED VACUUM BREAKER	SLOAN ROYAL 111-1.28, CHICAGO 910-G806CP	CARRIER: JR SMITH 0230Y (-M54-M58), 0210Y/0220Y (-M54-M58), WADE 350.
L 1	LAVATORY	2	1-1/2	-	1/2	1/2	VITREOUS CHINA, WALL HUNG, GRID DRAIN, COLOR: WHITE, ADA COMPLIANT. BOWL: 15"Wx10"FTBx6-1/2"D, SINGLE CENTER.	AMERICAN STANDARD 0356.421	ELECTRONIC SENSOR FAUCET, 0.5 GPM LAMINAR FLOW OUTLET, THERMOSTATIC MIX. VALVE, ANGLE STOP, GRID STRAINER, LAV SHIELD.	CHICAGO 116.213.AB.1, 131-CABNF, 1013-ABCP, 327-X1-12TPCP.	CARRIER: JR SMITH 0700, 0710, WITH BRAID. SS. STL. SUPPLIES, FIX. ENCL.
L 2	LAVATORY	2	1-1/2	-	1/2	1/2	VITREOUS CHINA, WALL HUNG, GRID DRAIN, COLOR: WHITE, ADA COMPLIANT. BOWL: 15"Wx10"FTBx6-1/2"D, 4" CENTERS.	AMERICAN STANDARD 0355.012	DECK MOUNT MANUAL FAUCET, 4" CTRS., 6-1/2" GNECK. SPOUT, 4" WRISTBLD., 0.5 GPM LAM. FLOW OUTLET, THER. MIX. VALVE, ANGLE STPS.	CHICAGO 895-317E2805-5ABCP, 131-CABNF, 1013-ABCP, 327-X1-12TPCP	CARRIER: JR SMITH 0700, 0710, WITH BRAID. SS. STL. SUPPLIES, FIX. ENCL.
S 3	SINK	2	1-1/2	-	1/2	1/2	18 GA., 304 S.S. 25"x22"x5-1/2", SINGLE BOWL DROP-IN ADA SINK, BOWL: 21"Wx 15-3/4"FTBx5-1/8"D, CNTR. REAR DRAIN, 3-HOLE PUNCH, OFFSET TLPC. W/ GRID STR.	ELKAY LRAD252255, LKAD18	DECK MOUNT MANUAL FAUCET, 8" CNTRS., 5-1/4" SWING SPOUT, 4" WRISTBLD., 1.5 GPM LAM. FLOW OUTLET, THER. MIX. VALVE, ANGLE STPS.	CHICAGO 786-E36VPABCP, 131-CABNF, 1013-ABCP	WITH BRAIDED STAINLESS STEEL SUPPLIES.
S 4	SINK	2	1-1/2	-	1/2	1/2	18 GA., 304 S.S. 15"x15"x6-1/8", SINGLE BOWL DROP-IN ADA SINK, BOWL: 12"Wx 9-1/4"FTBx6"D, CNTR. REAR DRAIN, 2-HOLE PUNCH, OFFSET TLPC. W/ GRID STR.	ELKAY BLR1560, LK8, LKADOS	DECK MOUNT MANUAL FAUCET, 4" CTRS., 5-1/4" SWING SPOUT, 4" WRISTBLD., 2.2 GPM LAM. FLOW OUTLET, THER. MIX. VALVE, ANGLE STPS.	CHICAGO 895-317GN2AE29VAB, 131-CABNF, 1013-ABCP	WITH BRAIDED STAINLESS STEEL SUPPLIES.
S 5	SINK	2	1-1/2	-	1/2	1/2	18 GA., 304 S.S. 33"x22"x5-1/2", DOUBLE BOWL DROP-IN ADA SINK, BOWLS: 13-1/2"W x16"FTBx5-1/8"D, CNTR. REAR DRAINS, 3-HOLE PUNCH, OFFSET TLPC. W/ GRID STR.	ELKAY LRAD332255, LKVR18B, LKADOS	DECK MOUNT MANUAL FAUCET, 8" CTRS., 8" GSNECK SPOUT, PLAIN OTLT., 4" WRISTBLD., 1.5 GPM LAM. FLOW, THER. MIX. VALVE, ANGLE STPS.	CHICAGO 786-GN8FCABCP, 131-CABNF, 1013-ABCP	WITH BRAIDED STAINLESS STEEL SUPPLIES.
S 6	PLAYROOM SINK	2	1-1/2	-	1/2	1/2	18 GA., 304 S.S. 25"x22"x10-3/8", SINGLE BOWL DROP-IN SINK. BOWL: 21"Wx 15-3/4" FTB x10"D, CNTR. REAR DRN., 4-HOLE PUNCH, 3-1/2" DRAIN FITT,G W/ STR. BSKT.	ELKAY DLR252210, LK99	DECK MT. MAN. FAUCET W/LAM. OTL. SPRAY, 8" CTRS., 8" GSNECK SPOUT, 4" WRISTBLD., 1.5 GPM LAM. FLOW OUTLET, THER. MIX. VALVE, ANGLE STOPS.	CHICAGO 1102-211769AB, E36JKABCP, 131-CABNF, 1013-ABCP	WITH BRAIDED STAINLESS STEEL SUPPLIES. SEE NOTE 1 BELOW.
S 7	SINK	2	1-1/2	-	1/2	1/2	18 GA., 304 S.S. 15"x15"x6-1/8", SINGLE BOWL DROP-IN ADA SINK, BOWL: 12"Wx 9-1/4"FTBx6"D, CNTR. REAR DRAIN, 1-HOLE PUNCH, W/ GRID STRAINER.	ELKAY BLR1560, LK337	DECK MOUNT ELECTRONIC FAUCET, 5-1/4" SWING SPOUT, 0.5 GPM LAM. FLOW OUTLET, THER. MIX. VALVE, ANGLE STPS.	CHICAGO 116.213.AB.1, 131-CABNF, 1013-ABCP	WITH BRAIDED STAINLESS STEEL SUPPLIES.
SS 1	SERVICE SINK	3	2	-	3/4	3/4	ENAMELED CAST IRON, FLOOR MOUNTED, CORNER MODEL, SERVICE SINK. 28"x28"x 13"D. REMOVABLE VINYL RIM GUARD, FLAT GRID DRAIN.	AMERICAN STANDARD 7745.811, 7721.038	WALL MOUNT MANUAL FAUCET, 8" CNTRS., VACUUM BKR., 1/4 TURN CHK. VALVE CERAMIC CART., INTEGRAL STOPS, PAIL HOOK.	CHICAGO 445-897SRXKCCP	
CS 1	CLINIC SINK	4	2	-	1-1/2	1/2	VITREOUS CHINA, WALL HUNG, FLUSHING RIM, 3" BACK OUTLET, TOP SPUD, COLOR: WHITE, BLOW-OUT OPERATION, 6.5 GPF.	AMERICAN STANDARD 9512999.020	6.5 GPF FLUSH VALVE, WALL MOUNT MANUAL FAUCET, 8" CTRS., BEDPAN WASHER, ROSE SPRAY, ELEVATED VACUUM BREAKER, FOOT PEDAL.	SLOAN ROYAL 117-6.5-E-H-C, CHICAGO 815-VBXKCCP, 910-G806CP	CARRIER: JR SMITH 0629 W/3" CONN.
SH 1	SHOWER	2	1-1/2	-	1/2	1/2	PATIENT SHOWER, SEE ARCHITECTURAL DRAWINGS. FOR DRAIN SEE DETAIL 4 ON DRAWING A8.3.		PRESSURE BALANCING SHOWER VALVE, INTEGRAL CHECK STOPS, HAND-HELD SHOWER W/BFP, 30-INCH BAR, 1.5 GPM, SHOWER DRAIN.	SYMMONS 261XBODY-CHKS, C-86-2-TRM-VP, T-300B-30-V, EF-100-1.5.	WITH JR SMITH FIGURE 2005Y.
SH 2	SHOWER	2	1-1/2	-	1/2	1/2	PREFABRICATED SHOWER ENCLOSURE, SEE ARCHITECTURAL DRAWINGS. FOR DRAIN SEE DETAIL 25 ON DRAWING P4.2.		PRESSURE BALANCING SHOWER VALVE, INTEGRAL CHECK STOPS, HAND-HELD SHOWER W/BFP, 30-INCH BAR, 1.5 GPM, SHOWER DRAIN.	SYMMONS 261XBODY-CHKS, C-86-2-TRM-VP, T-300B-30-V, EF-100-1.5.	DRAIN FURNISHED WITH PREFABRICATED SHOWER.
T 2	ICE MAKER	-	-	-	1/2	-			ANGLE STOP FITTING WITH COMPRESSION VALVE, 1/4"x12"L BRAIDED STNLSS. STL. ICE MAKER SUPPLY HOSE, 1/4"OD TUBEx3/8"MIP ADAPTER.	CHICAGO 1013-ABCP	
T 3	COFFEE MAKER	-	-	-	1/2	-			ANGLE STOP FITTING WITH COMPRESSION VALVE, DUAL CHECK WITH ATMOSPHERIC PORT (ASSE 1022). 12"L BRAIDED SS SUPPLY HOSE.	CHICAGO 1013-ABCP, WATTS 3/8" SD3-MN.	WITH CHROME PLATED BRASS PIPE CONNECTING STOP TO BFP STRAINER.
DD 1	DECK DRAIN	-	-	2	-	-	DUCO CAST IRON BODY, BRONZE FLASHING CLAMP, BRONZE TOP WITH VANDAL PROOF SCREW FASTENERS, THREADED OUTLET, 7 SQ. IN. FREE AREA.	JR SMITH FIGURE 1610T			
NZ 1	NOZZLE	-	-	SEE DWGS.	-	-	CAST BRONZE NOZZLE AND FLANGE WITH BIRD SCREEN, HUBLESS CONNECTION.	JR SMITH 1770-Y-BS			
TD 1	THRESHOLD DRAIN	-	-	SEE DWGS.	-	-	14 GAUGE TYPE 304 STAINLESS STEEL CONSTRUCTION , SIX ANCHOR STRAPS, HUBLESS VERT. OUTLET, HEEL-PROOF ADA SLOTTED GRATE. SIZE: 60"Lx3"Wx2"D.	JR SMITH 9678-25			

NOTE:

1. BOTH THE FAUCET AND HOSE SPRAY SHALL BE FITTED WITH NON-AERATING NOZZLES.

MEDICAL GAS EQUIPMENT

UNIT TAG	DUTY	MINIMUM CONNECTIONS (IN.) OX	VAC	MA	NO	N		MANUFACTURER AND MODEL NO.	REMARKS
ZV 1	ZONE VALVE ASSEMBLY	3/4	1	3/4	-	-	RECESSED BOX, WALL-MOUNT, FULL PORT VALVES, WITH GAUGES.	AMICO ZIU-M223	
OX 1	OXYGEN OUTLET	1/2	-	-	-	-	CHEMETRON COMPATIBLE STYLE.	AMICO O-CHWAL-U-OXY	
MA 1	MEDICAL AIR OUTLET	-	-	1/2	-	-	CHEMETRON COMPATIBLE STYLE.	AMICO O-CHWAL-U-AIR	
VAC 1	MEDICAL VACUUM INLET	-	3/4	-	-	-	CHEMETRON COMPATIBLE STYLE.	AMICO O-CHWAL-U-VAC	
VS 1	VACUUM SLIDE	-	-	-	-	-	-	AMICO O-WALSLIDE-G2	PROVIDE BLANK PLATE ADJACENT TO EACH VACUUM SLIDE.

EXISTING PLUMBING FIXTURES

(REFER TO ARCHITECTURAL DRAWINGS FOR EXTENT OF REMOVAL AND REINSTALLATION OF PLUMBING FIXTURES REQUIRED FOR WALL FINISH WORK.)

UNIT TAG	FIXTURE	MINIMUM CONNECTIONS (IN.) S/W	VENT	DRAIN	CW	HW	FIXTURE UNITS (FU)	FIXTURE	REMARKS
WC 3	WATER CLOSET	4	2	-	1-1/4	-	4.0	WALL MOUNTED FLUSHOMETER TYPE., ADA COMPLIANT	1.28 GPF BEDPAN WASHER MANUAL FLUSH VALVE.
L 1	LAVATORY	2	1-1/2	-	1/2	1/2	1.0	WALL MOUNTED, ADA COMPLIANT.	ELECTRONIC SENSOR FAUCET, LAMINAR FLOW OUTLET, THERMOSTATIC MIXING VALVE.
L 2	LAVATORY	2	1-1/2	-	1/2	1/2	1.0	WALL MOUNTED, ADA COMPLIANT.	LEVER HANDLE GOOSENECK FAUCET, LAMINAR FLOW OUTLET, THERMOSTATIC MIXING VALVE.
S2 EX	SINK	2	1-1/2	-	1/2	1/2	2.0	COUNTERTOP MOUNTED, SINGLE BOWL, DOUBLE PEDAL VALVE.	
SH EX	SHOWER	2	1-1/2	-	1/2	1/2	2.0	-	LEVER HANDLE CONTROL, THERMOSTATIC MIXING VALVE, CHECK STOPS, HAND-HELD SHOWER.
NZ 1	NOZZLE	-	-	SEE DWGS.	-	-	-	CAST BRONZE NOZZLE AND FLANGE WITH BIRD SCREEN, HUBLESS CONNECTION.	

PIPES, DUCTS, AND CONDUITS SHALL BE SUPPORTED AND BRACED PER HCAI PRE-APPROVAL NO. OPM-0043-13, MASON INDUSTRIES, INC. 'SEISMIC RESTRAINT COMPONENTS FOR SUSPENDED UTILITIES'. A COPY OF THE HCAI PRE-APPROVED DOCUMENTS SHALL BE AT THE JOB SITE AT ALL TIMES. INSTALLATION OF THIS EQUIPMENT MUST BE DONE IN STRICT ACCORDANCE WITH THE PRE-APPROVED DOCUMENTS.

LAYOUT DRAWINGS, SHOWING THE BRACING/SUPPORT LOCATIONS AND REFERENCES TO DETAILS FROM THE RELEVANT HCAI PRE-APPROVALS FOR PIPING/DUCTS/CONDUITS EXCEPT FIRE SPRINKLERS, SHALL BE SUBMITTED FOR USE BY THE IOR AND OFFICE FIELD STAFF. THE LAYOUT DRAWINGS SHALL BE REVIEWED AND ACCEPTED BY THE AOR AND EOR (SE AND/OR ME/EE) PRIOR TO START OF INSTALLATION OF THE BRACING/SUPPORT. IOR SHALL ENSURE THE ABOVE REQUIREMENTS ARE SATISFIED.

ANCHORAGE AND SUPPORTS OF ALL EQUIPMENT TO BE INSTALLED AS A PART OF THIS PROJECT SHALL BE DETAILED ON CONSTRUCTION DOCUMENTS, EXCEPT THOSE EXEMPT BY 2019 CBC SECTION 1617A.1.18. EQUIPMENT SUPPORTS AND ANCHORAGE SHALL BE APPROVED BY THE APPROPRIATE DESIGN PROFESSIONAL OF RECORD AND HCAI AS PART OF FIELD REVIEWS/OBSERVATIONS. THE INSPECTOR OF RECORD (IOR) SHALL ASSURE THAT THE ABOVE REQUIREMENTS ARE ENFORCED.

EXPANSION ANCHORS FOR USE IN CONCRETE IN DRY LOCATIONS SHALL BE HILTI KWIK BOLT TZ2, ZINC COATED, CARBON STEEL ANCHORS. EXPANSION ANCHORS FOR USE IN CONCRETE IN DAMP AND WET LOCATIONS SHALL BE HILTI KWIK BOLT TZ2 STAINLESS STEEL ANCHORS. EXPANSION ANCHORS FOR USE IN GROUT FILLED MASONRY IN DRY LOCATIONS SHALL BE HILTI KWIK BOLT TZ2 CARBON STEEL MASONRY ANCHORS. EXPANSION ANCHORS FOR USE IN GROUT FILLED MASONRY IN DAMP AND WET LOCATIONS SHALL BE HILTI KWIK BOLT TZ2 STAINLESS STEEL MASONRY ANCHORS. PROVIDE ANCHORS OF DIAMETER AND MINIMUM EMBEDMENT INDICATED. DRY LOCATIONS ARE DEFINED AS LOCATIONS NOT NORMALLY SUBJECT TO DAMPNESS OR WETNESS. DAMP LOCATIONS ARE DEFINED AS PARTIALLY PROTECTED LOCATIONS UNDER CANOPIES, MARQUEES, ROOFED PORCHES, AND LIKE LOCATIONS AND INTERIOR LOCATIONS SUBJECT TO MODERATE DEGREES OF MOISTURE, SUCH AS SOME BASEMENTS. WET LOCATIONS ARE DEFINED AS INSTALLATIONS UNDERGROUND OR IN CONCRETE SLABS OR MASONRY IN DIRECT CONTACT WITH THE EARTH, LOCATIONS SUBJECT TO SATURATION WITH WATER OR OTHER LIQUIDS, AND LOCATIONS EXPOSED TO WEATHER AND UNPROTECTED.

PROOF LOAD TEST FOR WEDGE TYPE ANCHOR BOLTS: WHERE ANCHOR BOLTS OF THE WEDGE EXPANSION TYPE ARE LOADED IN PULLOUT OR SHEAR, 50% OF THE BOLTS (ALTERNATE BOLTS IN ANY GROUP ARRANGEMENT) SHALL BE PROOF TESTED AT LEAST 24 HOURS AFTER INSTALLATION IN THE PRESENCE OF PROJECT INSPECTOR TO THE TEST VALUES LISTED FOR THE PARTICULAR ANCHOR. IF ANY BOLTS FAIL THE PROOF LOAD TEST, TEST ALL ANCHOR BOLTS OF THE SAME TYPE, INSTALLED BY THE SAME TRADE, AND NOT PREVIOUSLY TESTED, UNTIL 20 CONSECUTIVE ANCHORS PASS, THEN RESUME INITIAL TEST FREQUENCY. ANCHORS SHALL BE TESTED WITH A CALIBRATED TORQUE WRENCH AND MUST ATTAIN SPECIFIED TORQUE WITHIN 1/2 TURN OF THE NUT.

TEST: TORQUE

BOLT DIAMETER (INCHES):	3/8	1/2	5/8	3/4
KB-TZ2 CONCRETE TORQUE VALUE (FT-LBS) ESR-4266 CARBON STEEL/STAINLESS STEEL:	30/30	50/40	40/60	110/110
KB-TZ2 GROUT FILLED MASONRY TORQUE VALUE (FT-LBS) ESR-4561 CARBON STL./STAINLESS STL.:	15/15	25/25	30/35	50/50

WHEN INSTALLING DRILLED-IN ANCHORS IN EXISTING NON-PRESTRESSED REINFORCED CONCRETE, USE CARE AND CAUTION TO AVOID CUTTING OR DAMAGING THE EXISTING REINFORCING BARS. MAINTAIN A MINIMUM CLEARANCE OF ONE INCH BETWEEN THE REINFORCEMENT AND THE DRILLED-IN ANCHOR.

18 SEISMIC NOTES

1. THE FAINER WING IS PROTECTED BY AN EXISTING FIRE SPRINKLER AND STANDPIPE COMBINED SYSTEM THAT SERVES THE BASEMENT THROUGH THE PENTHOUSE ELEVATOR MACHINE ROOM.
2. DEMOLISH PORTIONS OF THE SECOND FLOOR FIRE SPRINKLER SYSTEM TO COORDINATE WITH THE PLANNED REMODEL WORK.
3. INSTALL FIRE SPRINKLER PIPING AND ADD FIRE SPRINKLERS AS REQUIRED TO SERVE THE SECOND FLOOR.
4. COORDINATE WITH THE SYSTEM MODIFICATIONS THAT WERE INSTALLED AS PART OF THE HELIPAD REPLACEMENT, HCAI PROJECT NO. S210439-56-00.

19 FIRE SPRINKLER NOTES

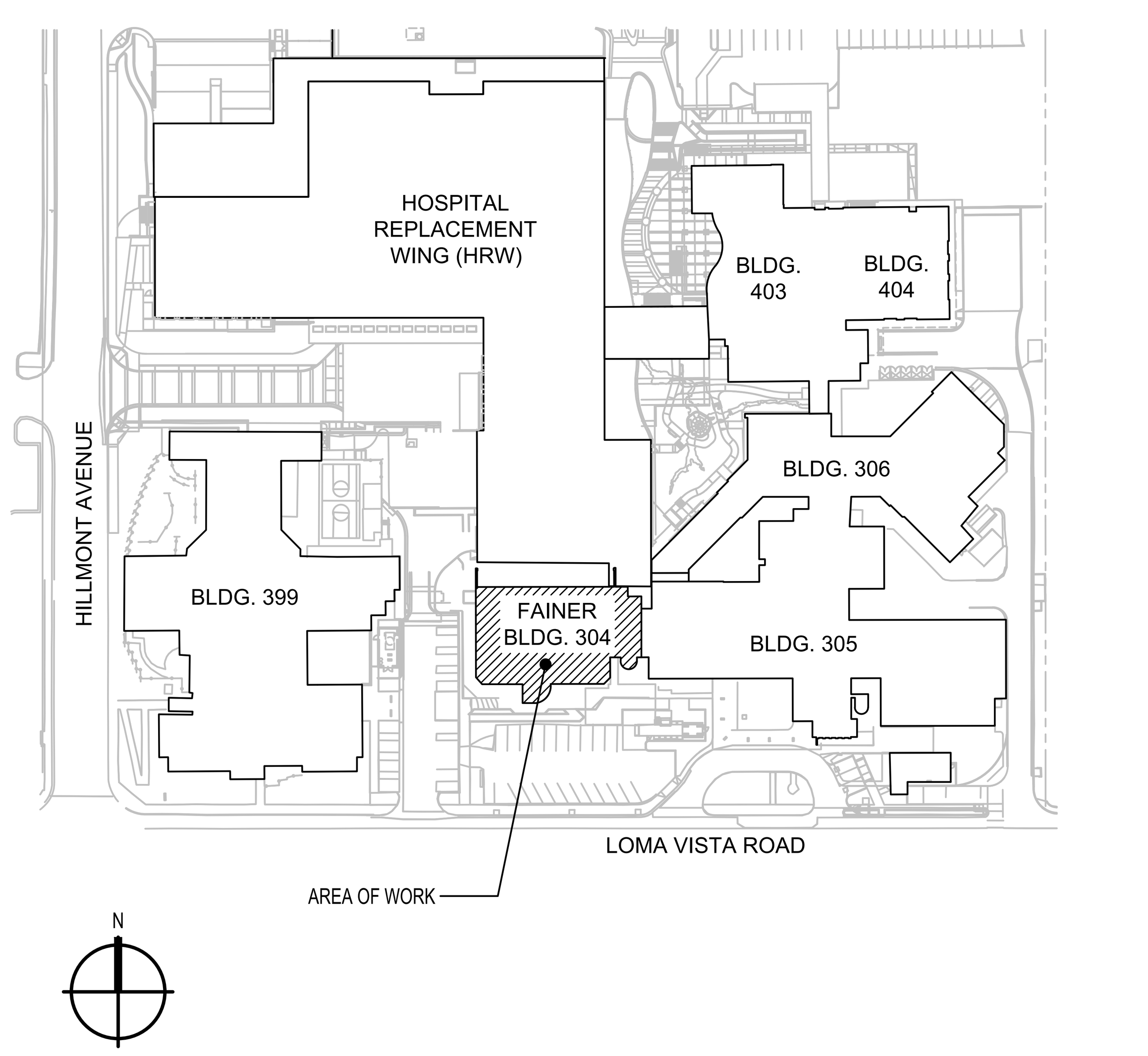

20 KEY PLAN

NTS

LEGEND

SYMBOL	ABBREVIATION	DESCRIPTION
—— - ——	CW	COLD WATER (POTABLE)
—— - - ——	HW	HOT WATER (POTABLE)
—— - - - ——	HWR	HOT WATER RETURN (POTABLE)
━━ ━━ ━━	S OR W	SANITARY SOIL/WASTE BELOW FLOOR/GRADE
━━━━━━	S OR W	SANITARY SOIL/WASTE ABOVE FLOOR/GRADE
- - - - - -	V	PLUMBING VENT
—— D ——	D	INDIRECT DRAIN
—— FSC ——	FSC	FIRE SPRINKLER & STANDPIPE COMBINED SYSTEM
—— OX ——	OX	OXYGEN
—— VAC ——	VAC	VACUUM
—— MA ——	MA	MEDICAL AIR
—— NO ——	NO	NITROUS OXIDE
━━ SD ━━	SD	STORM WATER DRAIN
━━ OD ━━	OD	OVERFLOW DRAIN
—— TP ——	TP	TRAP PRIME
—×—×—		EXISTING PIPING TO BE REMOVED
	GV	GATE VALVE
	BV	BALL VALVE
	CBV	CALIBRATED BALANCE VALVE
	STR	STRAINER (WYE)
	FLEX	FLEXIBLE PIPE CONNECTOR
		PIPE TURNS DOWN
		PIPE TURNS UP
		PIPE TEE DOWN
	VOR	VALVE ON RISE
		DIRECTION OF FLOW
(-2%)		PIPE SLOPE (RATE AND DIRECTION)
		REDUCER/INCREASER (CONCENTRIC)
		REDUCER/INCREASER (ECCENTRIC)
	WHA	WATER HAMMER ARRESTER
T		TRAP PRIMER
		MEDICAL GAS INLET/OUTLET
		EXISTING MEDICAL GAS INLET/OUTLET
		FIRE SPRINKLER - CONCEALED
		FIRE SPRINKLER - RECESSED
		FIRE SPRINKLER - PENDENT
		FIRE SPRINKLER - UPRIGHT
		PIPE CAP
	POC	POINT OF CONNECTION
1		NUMBERED NOTES
SW-01.1		SANITARY SOIL/WASTE RISER TAG
PV-01.1		PLUMBING VENT RISER TAG
SD-1A		EXISTING STORM WATER RISER TAG
SW-01.2		EXISTING SANITARY SOIL/WASTE RISER TAG
PV-01.2		EXISTING PLUMBING VENT RISER TAG
X X		EXISTING FIXTURE/EQUIPMENT TAG
	VTR	VENT THROUGH ROOF
	TYP. OR (TYP)	TYPICAL
	E OR (E)	PREFIX INDICATING EXISTING

VENTURA COUNTY
HEALTH CARE AGENCY

PUBLIC
VENTURA COUNTY
WORKS
ENGINEERING SERVICES

RASMUSSEN & ASSOCIATES
Architecture
Planning
Interiors
21 S. California Street
Fourth Floor
Ventura, California 93001
(805) 648-1234

IRJ ENGINEERS, INC.
MECHANICAL & ELECTRICAL ENGINEERS
JOB No. 2027-00
4517 MARKET STREET, SUITE 16 VENTURA, CALIFORNIA 93003
(805) 642-2355

FOR PLAN REVIEW ONLY

PROFESSIONAL SEALS

PERMIT APPROVAL STAMP

REVIEWED IN ACCORDANCE WITH THE REQUIREMENTS OF T24, CCR
APPROVED
Department of Health Care Access and Information
FACILITIES DEVELOPMENT DIVISION
9/28/2022, 3:17:57 PM
H202495-56-00
Laura Baldrati

PERMIT NO HCAI #H202495-56-00

NO	REVISION	DATE
△	HCAI RESUBMITTAL	09/19/2022

PUBLIC WORKS PROJECT MANAGER

CONSULTANT PROJECT MANAGER
Jay Lomagno

DRAWN BY | CHECKED BY

CONSULTANT JOB NO A000495 | DATE 06/15/2022

PROJECT TITLE AND ADDRESS

VENTURA COUNTY MEDICAL CENTER PEDIATRIC UNIT

300 HILLMONT AVE
VENTURA, CA 93003

COUNTY SPEC NUMBER CP21-04

COUNTY PROJECT NUMBER P6T20009

COUNTY DWG NO | SHEET 50 OF 89

SHEET TITLE

LEGEND, SCHEDULES, NOTES, KEY PLAN

SHEET NO P1.1

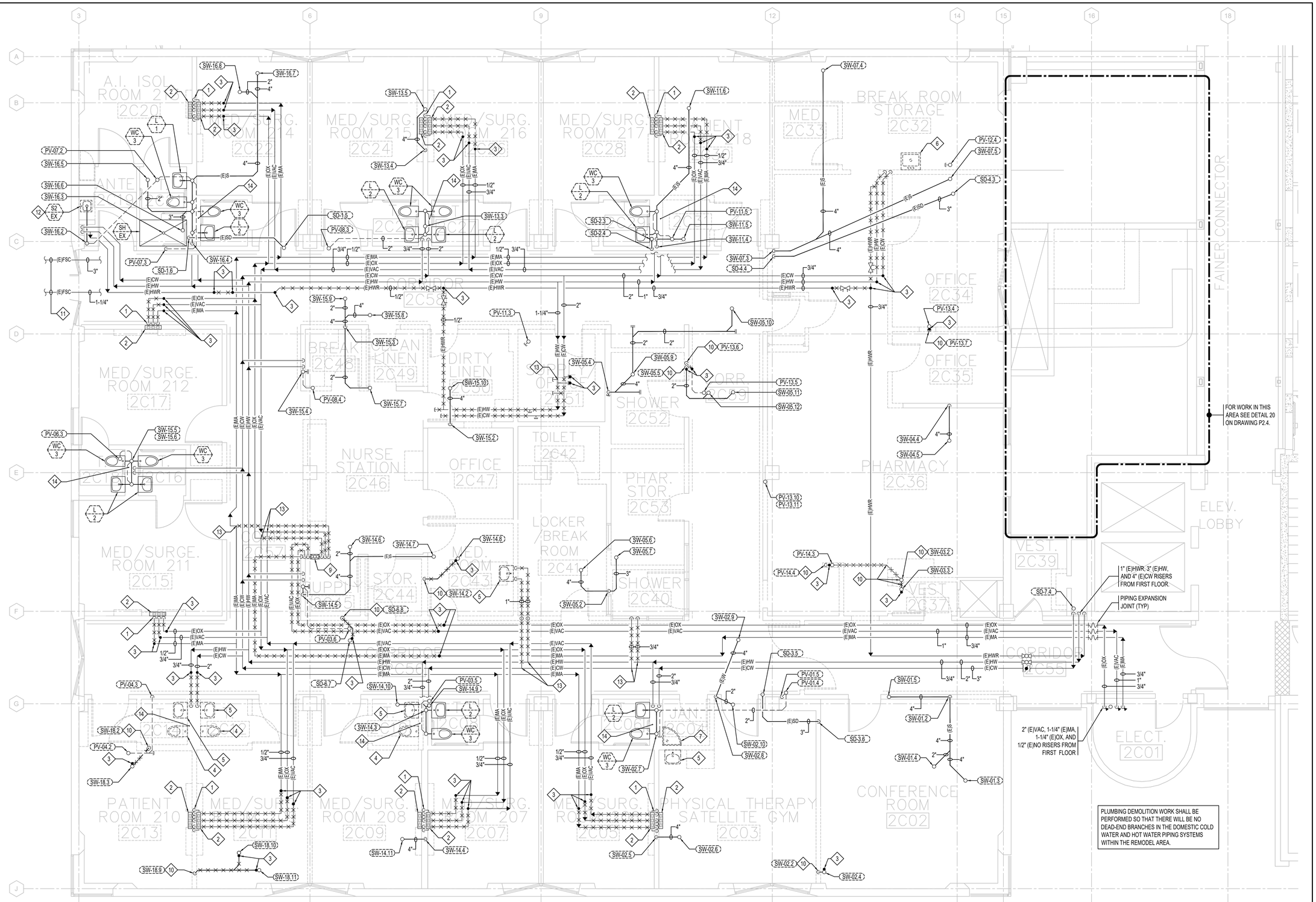

PLUMBING DEMOLITION WORK SHALL BE PERFORMED SO THAT THERE WILL BE NO DEAD-END BRANCHES IN THE DOMESTIC COLD WATER AND HOT WATER PIPING SYSTEMS WITHIN THE REMODEL AREA.

RISER TAG	SIZE	REMARKS	RISER TAG	SIZE	REMARKS	RISER TAG	SIZE	REMARKS	RISER TAG	SIZE	REMARKS	RISER TAG	SIZE	REMARKS
SW-01.2	4"	DOWN TO FLOOR BELOW	SW-05.10	2"	DOWN FROM FLOOR ABOVE	SW-15.2	4"	DOWN TO FLOOR BELOW	PV-01.5	3"	UP FROM FLOOR BELOW	SD-1.5	3"	DOWN FROM FLOOR ABOVE
SW-01.3	4"	DOWN FROM FLOOR ABOVE	SW-05.11	2"	DOWN FROM FLOOR ABOVE	SW-15.3	4"	DOWN TO FLOOR BELOW	PV-03.5	2"	UP TO FLOOR ABOVE	SD-1.6	3"	DOWN TO FLOOR BELOW
SW-01.4	2"	DOWN FROM FLOOR ABOVE	SW-05.12	2"	DOWN FROM FLOOR ABOVE	SW-15.4	2"	DOWN TO FLOOR BELOW	PV-03.6	2"	UP TO FLOOR ABOVE	SD-2.3	3"	DOWN FROM FLOOR ABOVE
SW-01.5	4"	DOWN FROM FLOOR ABOVE	SW-07.3	4"	DOWN TO FLOOR BELOW	SW-15.5	4"	DOWN TO FLOOR BELOW	PV-04.2	3"	UP TO FLOOR ABOVE	SD-2.4	3"	DOWN TO FLOOR BELOW
SW-02.2	4"	DOWN TO FLOOR BELOW	SW-07.4	4"	DOWN FROM FLOOR ABOVE	SW-15.6	4"	DOWN FROM FLOOR ABOVE	PV-04.3	3"	UP FROM FLOOR BELOW	SD-3.5	3"	DOWN FROM FLOOR ABOVE
SW-02.4	4"	DOWN FROM FLOOR ABOVE	SW-07.5	4"	DOWN FROM FLOOR ABOVE	SW-15.7	2"	DOWN FROM FLOOR ABOVE	PV-06.3	2-1/2"	UP TO FLOOR ABOVE	SD-3.6	3"	DOWN FROM FLOOR ABOVE
SW-02.5	4"	DOWN TO FLOOR BELOW	SW-11.4	4"	DOWN TO FLOOR BELOW	SW-15.8	4"	DOWN FROM FLOOR ABOVE	PV-07.2	2"	UP TO FLOOR ABOVE	SD-4.3	3"	DOWN FROM FLOOR ABOVE
SW-02.6	4"	DOWN FROM FLOOR ABOVE	SW-11.5	2"	DOWN FROM FLOOR ABOVE	SW-15.9	2"	DOWN FROM FLOOR ABOVE	PV-07.3	2"	UP FROM FLOOR BELOW	SD-4.4	3"	DOWN TO FLOOR BELOW
SW-02.7	4"	DOWN TO FLOOR BELOW	SW-11.6	4"	DOWN TO FLOOR BELOW	SW-15.10	4"	DOWN FROM FLOOR ABOVE	PV-08.3	2"	UP TO FLOOR ABOVE	SD-6.7	3"	DOWN FROM FLOOR ABOVE
SW-02.8	4"	DOWN TO FLOOR BELOW	SW-13.3	4"	DOWN TO FLOOR BELOW	SW-16.2	2"	DOWN TO FLOOR BELOW	PV-08.4	2"	UP TO FLOOR ABOVE	SD-6.8	3"	DOWN TO FLOOR BELOW
SW-02.9	4"	DOWN FROM FLOOR ABOVE	SW-13.4	4"	DOWN TO FLOOR BELOW	SW-16.3	2"	DOWN TO FLOOR BELOW	PV-11.3	2"	UP TO FLOOR ABOVE	SD-7.4	3"	DOWN TO FLOOR BELOW
SW-02.10	2"	DOWN FROM FLOOR ABOVE	SW-13.5	4"	DOWN FROM FLOOR ABOVE	SW-16.4	4"	DOWN TO FLOOR BELOW	PV-11.5	2"	UP TO FLOOR ABOVE			
SW-03.2	2"	DOWN TO FLOOR BELOW	SW-14.2	2"	DOWN TO FLOOR BELOW	SW-16.5	2"	DOWN FROM FLOOR ABOVE	PV-12.4	2"	UP TO FLOOR ABOVE			
SW-03.3	2"	DOWN FROM FLOOR ABOVE	SW-14.3	4"	DOWN TO FLOOR BELOW	SW-16.6	3"	DOWN FROM FLOOR ABOVE	PV-13.4	3"	UP TO FLOOR ABOVE			
SW-04.4	4"	DOWN TO FLOOR BELOW	SW-14.4	4"	DOWN TO FLOOR BELOW	SW-16.7	4"	DOWN FROM FLOOR ABOVE	PV-13.5	2"	UP TO FLOOR ABOVE			
SW-04.5	4"	DOWN FROM FLOOR ABOVE	SW-14.5	4"	DOWN TO FLOOR BELOW	SW-16.8	3"	DOWN FROM FLOOR ABOVE	PV-13.6	2"	UP FROM FLOOR BELOW			
SW-05.2	4"	DOWN TO FLOOR BELOW	SW-14.6	2"	DOWN FROM FLOOR ABOVE	SW-16.9	4"	DOWN TO FLOOR BELOW	PV-13.7	3"	UP FROM FLOOR BELOW			
SW-05.3	4"	DOWN FROM FLOOR ABOVE	SW-14.7	2"	DOWN FROM FLOOR ABOVE	SW-18.2	2"	DOWN FROM FLOOR ABOVE	PV-13.10	3"	UP FROM FLOOR BELOW			
SW-05.4	4"	DOWN TO FLOOR BELOW	SW-14.8	2"	DOWN FROM FLOOR ABOVE	SW-18.3	4"	DOWN TO FLOOR BELOW	PV-13.11	2"	UP FROM FLOOR BELOW			
SW-05.5	4"	DOWN FROM FLOOR ABOVE	SW-14.9	4"	DOWN FROM FLOOR ABOVE	SW-18.10	2"	DOWN FROM FLOOR ABOVE	PV-14.3	3"	UP TO FLOOR ABOVE			
SW-05.6	3"	DOWN FROM FLOOR ABOVE	SW-14.10	2"	DOWN FROM FLOOR ABOVE	SW-18.11	4"	DOWN FROM FLOOR ABOVE	PV-14.4	3"	UP FROM FLOOR BELOW			
SW-05.9	4"	DOWN FROM FLOOR ABOVE	SW-14.11	4"	DOWN FROM FLOOR ABOVE	PV-01.4	3"	UP TO FLOOR ABOVE						

NUMBERED NOTES:

(THIS DRAWING ONLY)

1. DEMOLISH OXYGEN, VACUUM, AND MEDICAL AIR PIPING TO EXISTING HEADWALL, POINT OF CONNECTION FOR THIS WORK.
2. DEMOLISH EXISTING HEADWALL.
3. POINT OF CONNECTION FOR THIS WORK.
4. DEMOLISH WATER CLOSET, TRIM, FIXTURE CARRIER/SUPPORTS, AND BRANCH SOIL, VENT, AND COLD WATER PIPING. CAP PIPING AS SHOWN/REQUIRED.
5. DEMOLISH LAVATORY, TRIM, FIXTURE CARRIER/SUPPORTS, AND BRANCH WASTE, VENT, COLD WATER, AND HOT WATER PIPING. CAP PIPING AS SHOWN/REQUIRED.
6. DEMOLISH SINK, TRIM, AND BRANCH WASTE, VENT, COLD WATER, AND HOT WATER PIPING. CAP PIPING AS SHOWN/REQUIRED.
7. DEMOLISH SERVICE SINK, TRIM, AND BRANCH WASTE, VENT, COLD WATER, AND HOT WATER PIPING. CAP PIPING AS SHOWN/REQUIRED.
8. NOT USED.
9. DEMOLISH OXYGEN, VACUUM, AND MEDICAL AIR ZONE VALVES AND PIPING. CAP PIPING AS SHOWN.. PATCH WALL AND CEILING.
10. DEMOLISH THE WASTE/SOIL/VENT/STORM DRAINAGE PIPING. SEAL AND PATCH ABANDONED PENETRATION THRU CONCRETE FLOOR.
11. FOR CONTINUATION SEE DETAIL 28 ON DRAWING P2.4.
12. DEMOLISH EXISTING COUNTER MOUNTED SINK. CAP PIPING AS REQUIRED FOR INSTALLATION OF NEW COUNTER MOUNTED SINK.
13. DEMOLISH TEE SERVING DEMOLISHED BRANCH PIPING AND INSTALL COUPLINGS TO RECONNECT MAIN PIPING.
14. DEMOLISH WATER HAMMER ARRESTOR IN HOT WATER PIPING ALONG WITH TEE AND BRANCH PIPING SERVING WATER HAMMER ARRESTOR. INSTALL PIPE AND COUPLINGS TO RECONNECT MAIN PIPING.

(40) SECOND FLOOR PLUMBING DEMOLITION PLAN

SCALE 1/4" = 1' - 0"

N

VENTURA COUNTY HEALTH CARE AGENCY

PUBLIC WORKS VENTURA COUNTY

ENGINEERING SERVICES

RASMUSSEN & ASSOCIATES
Architecture
Planning
Interiors
21 S. California Street
Fourth Floor
Ventura, California 93001
(805) 648-1234

IRJ ENGINEERS, INC.
MECHANICAL & ELECTRICAL ENGINEERS
4517 MARKET STREET, SUITE 1B VENTURA, CALIFORNIA 93003
(805) 642-2355

FOR PLAN REVIEW ONLY

PROFESSIONAL SEALS

PERMIT APPROVAL STAMP

REVIEWED IN ACCORDANCE WITH THE REQUIREMENTS OF T24, CCR
APPROVED
Department of Health Care Access and Information
FACILITIES DEVELOPMENT DIVISION
9/28/2022, 3:17:57 PM
H202495-56-00
Laura Baldrati

PERMIT NO HCAI #H202495-56-00

NO	REVISION	DATE
1	HCAI RESUBMITTAL	09/19/2022

PUBLIC WORKS PROJECT MANAGER

CONSULTANT PROJECT MANAGER
Jay Lomagno

DRAWN BY	CHECKED BY
CONSULTANT JOB NO A000495	DATE 06/15/2022

PROJECT TITLE AND ADDRESS

VENTURA COUNTY MEDICAL CENTER PEDIATRIC UNIT

300 HILLMONT AVE
VENTURA, CA 93003

COUNTY SPEC NUMBER
CP21-04

COUNTY PROJECT NUMBER
P6T20009

COUNTY DWG NO — SHEET 51 OF 89

SHEET TITLE
SECOND FLOOR PLUMBING DEMOLITION PLAN

SHEET NO
P2.1

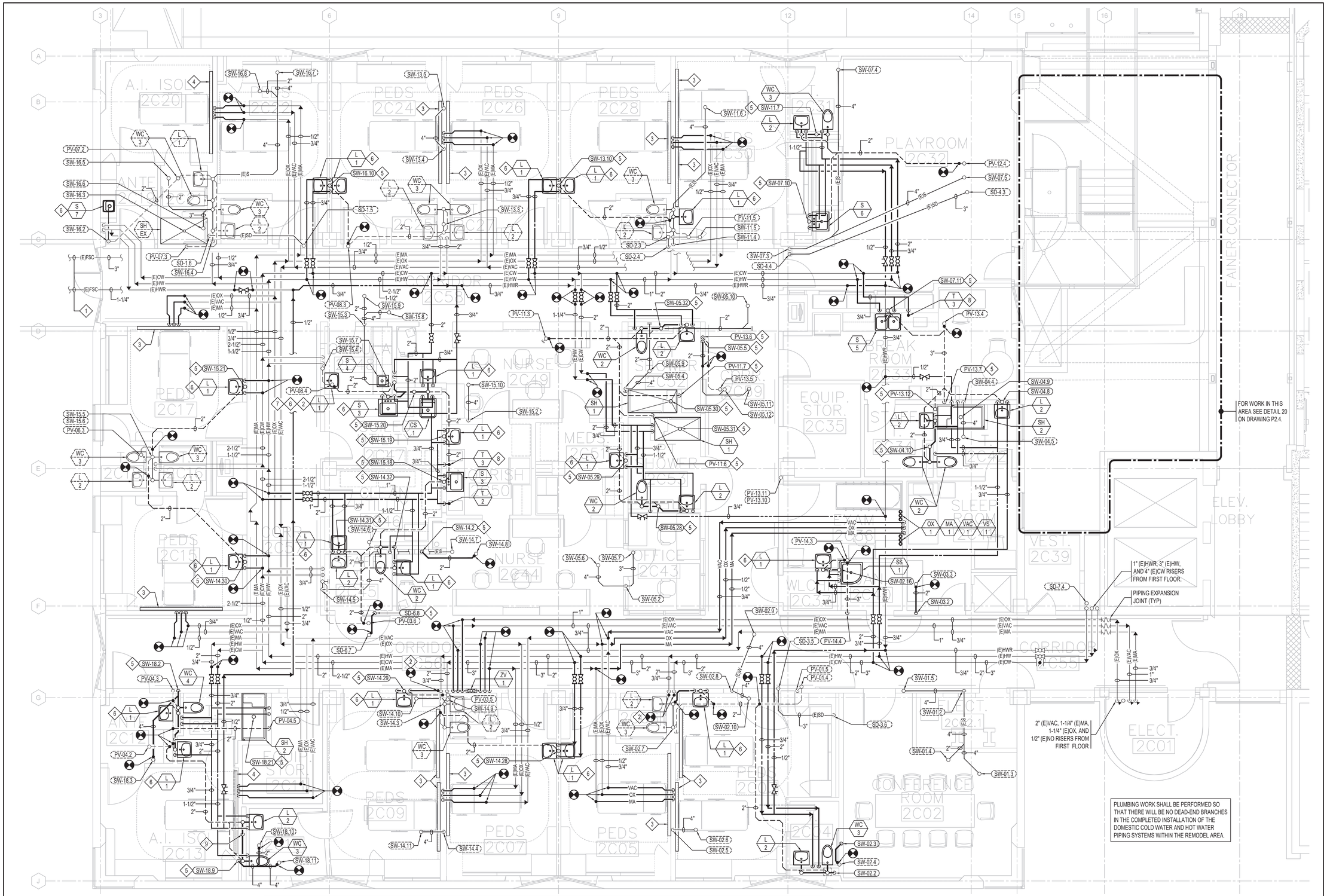

PLUMBING WORK SHALL BE PERFORMED SO THAT THERE WILL BE NO DEAD-END BRANCHES IN THE COMPLETED INSTALLATION OF THE DOMESTIC COLD WATER AND HOT WATER PIPING SYSTEMS WITHIN THE REMODEL AREA.

RISER TAG	SIZE	REMARKS	RISER TAG	SIZE	REMARKS	RISER TAG	SIZE	REMARKS	RISER TAG	SIZE	REMARKS	RISER TAG	SIZE	REMARKS	RISER TAG	SIZE	REMARKS
SW-01.2	4"	DOWN TO FLOOR BELOW	SW-05.4	4"	DOWN TO FLOOR BELOW	SW-13.3	4"	DOWN TO FLOOR BELOW	SW-15.5	4"	DOWN TO FLOOR BELOW	SW-18.11	4"	DOWN FROM FLOOR ABOVE	PV-13.7	3"	UP FROM FLOOR BELOW
SW-01.3	4"	DOWN FROM FLOOR ABOVE	SW-05.5	4"	DOWN FROM FLOOR ABOVE	SW-13.4	4"	DOWN TO FLOOR BELOW	SW-15.6	4"	DOWN FROM FLOOR ABOVE	SW-18.21	2"	DOWN TO FLOOR BELOW	PV-13.10	2"	UP TO FLOOR ABOVE
SW-01.4	2"	DOWN FROM FLOOR ABOVE	SW-05.6	4"	DOWN FROM FLOOR ABOVE	SW-13.5	4"	DOWN FROM FLOOR ABOVE	SW-15.7	2"	DOWN FROM FLOOR ABOVE	PV-01.4	3"	UP TO FLOOR ABOVE	PV-13.11	2"	UP FROM FLOOR BELOW
SW-01.5	4"	DOWN FROM FLOOR ABOVE	SW-05.7	3"	DOWN FROM FLOOR ABOVE	SW-13.10	2"	DOWN TO FLOOR BELOW	SW-15.8	4"	DOWN FROM FLOOR ABOVE	PV-01.5	3"	UP FROM FLOOR BELOW	PV-13.12	2"	UP FROM FLOOR BELOW
SW-02.2	4"	DOWN TO FLOOR BELOW	SW-05.9	4"	DOWN FROM FLOOR ABOVE	SW-14.2	2"	DOWN TO FLOOR BELOW	SW-15.9	2"	DOWN FROM FLOOR ABOVE	PV-03.5	2"	UP TO FLOOR ABOVE	PV-14.3	3"	UP TO FLOOR ABOVE
SW-02.3	4"	DOWN TO FLOOR BELOW	SW-05.10	2"	DOWN FROM FLOOR ABOVE	SW-14.3	4"	DOWN TO FLOOR BELOW	SW-15.10	4"	DOWN FROM FLOOR ABOVE	PV-03.6	2"	UP TO FLOOR ABOVE	PV-14.4	3"	UP TO FLOOR ABOVE
SW-02.4	4"	DOWN FROM FLOOR ABOVE	SW-05.11	2"	DOWN FROM FLOOR ABOVE	SW-14.4	4"	DOWN TO FLOOR BELOW	SW-15.18	2"	DOWN TO FLOOR BELOW	PV-04.2	3"	UP TO FLOOR ABOVE	SD-1.5	3"	DOWN FROM FLOOR ABOVE
SW-02.5	4"	DOWN TO FLOOR BELOW	SW-05.12	2"	DOWN FROM FLOOR ABOVE	SW-14.5	4"	DOWN TO FLOOR BELOW	SW-15.19	2"	DOWN TO FLOOR BELOW	PV-04.3	3"	UP FROM FLOOR BELOW	SD-1.6	3"	DOWN TO FLOOR BELOW
SW-02.6	4"	DOWN FROM FLOOR ABOVE	SW-05.28	4"	DOWN TO FLOOR BELOW	SW-14.6	2"	DOWN FROM FLOOR ABOVE	SW-15.20	4"	DOWN TO FLOOR BELOW	PV-04.4	3"	UP TO FLOOR ABOVE	SD-2.3	3"	DOWN FROM FLOOR ABOVE
SW-02.7	4"	DOWN TO FLOOR BELOW	SW-05.29	2"	DOWN TO FLOOR BELOW	SW-14.7	4"	DOWN FROM FLOOR ABOVE	SW-15.21	2"	DOWN TO FLOOR BELOW	PV-06.3	2-1/2"	UP TO FLOOR ABOVE	SD-2.4	3"	DOWN TO FLOOR BELOW
SW-02.8	4"	DOWN TO FLOOR BELOW	SW-05.30	2"	DOWN TO FLOOR BELOW	SW-14.8	2"	DOWN FROM FLOOR ABOVE	SW-16.2	2"	DOWN TO FLOOR BELOW	PV-07.2	2"	UP TO FLOOR ABOVE	SD-3.5	3"	DOWN FROM FLOOR ABOVE
SW-02.9	4"	DOWN FROM FLOOR ABOVE	SW-05.31	2"	DOWN TO FLOOR BELOW	SW-14.9	4"	DOWN FROM FLOOR ABOVE	SW-16.3	2"	DOWN TO FLOOR BELOW	PV-07.3	2"	UP FROM FLOOR BELOW	SD-3.6	3"	DOWN TO FLOOR BELOW
SW-02.10	2"	DOWN FROM FLOOR ABOVE	SW-05.32	4"	DOWN TO FLOOR BELOW	SW-14.10	2"	DOWN FROM FLOOR ABOVE	SW-16.4	4"	DOWN TO FLOOR BELOW	PV-08.3	2"	UP TO FLOOR ABOVE	SD-4.3	3"	DOWN FROM FLOOR ABOVE
SW-02.16	2"	DOWN TO FLOOR BELOW	SW-07.3	4"	DOWN TO FLOOR BELOW	SW-14.11	4"	DOWN FROM FLOOR ABOVE	SW-16.5	2"	DOWN FROM FLOOR ABOVE	PV-08.4	2"	UP TO FLOOR ABOVE	SD-4.4	3"	DOWN TO FLOOR BELOW
SW-03.2	2"	DOWN TO FLOOR BELOW	SW-07.4	4"	DOWN FROM FLOOR ABOVE	SW-14.28	2"	DOWN TO FLOOR BELOW	SW-16.6	3"	DOWN FROM FLOOR ABOVE	PV-11.3	2"	UP TO FLOOR ABOVE	SD-6.7	3"	DOWN FROM FLOOR ABOVE
SW-03.3	2"	DOWN FROM FLOOR ABOVE	SW-07.5	4"	DOWN FROM FLOOR ABOVE	SW-14.29	2"	DOWN TO FLOOR BELOW	SW-16.7	4"	DOWN FROM FLOOR ABOVE	PV-11.5	2"	UP TO FLOOR ABOVE	SD-6.8	3"	DOWN TO FLOOR BELOW
SW-04.4	4"	DOWN TO FLOOR BELOW	SW-07.10	2"	DOWN TO FLOOR BELOW	SW-14.30	2"	DOWN TO FLOOR BELOW	SW-16.8	2"	DOWN FROM FLOOR ABOVE	PV-11.6	2"	UP FROM FLOOR BELOW	SD-7.4	3"	DOWN TO FLOOR BELOW
SW-04.5	4"	DOWN FROM FLOOR ABOVE	SW-07.11	2"	DOWN TO FLOOR BELOW	SW-14.31	2"	DOWN TO FLOOR BELOW	SW-16.10	2"	DOWN TO FLOOR BELOW	PV-11.7	2"	UP FROM FLOOR BELOW			
SW-04.8	2"	DOWN TO FLOOR BELOW	SW-11.4	4"	DOWN TO FLOOR BELOW	SW-14.32	4"	DOWN TO FLOOR BELOW	SW-18.2	4"	DOWN TO FLOOR BELOW	PV-12.4	2"	UP TO FLOOR ABOVE			
SW-04.9	2"	DOWN TO FLOOR BELOW	SW-11.5	2"	DOWN FROM FLOOR ABOVE	SW-15.2	4"	DOWN TO FLOOR BELOW	SW-18.3	4"	DOWN FROM FLOOR ABOVE	PV-13.4	3"	UP TO FLOOR ABOVE			
SW-04.10	4"	DOWN TO FLOOR BELOW	SW-11.6	4"	DOWN FROM FLOOR ABOVE	SW-15.3	4"	DOWN TO FLOOR BELOW	SW-18.9	4"	DOWN TO FLOOR BELOW	PV-13.5	2"	UP TO FLOOR ABOVE			
SW-05.2	4"	DOWN TO FLOOR BELOW	SW-11.7	4"	DOWN TO FLOOR BELOW	SW-15.4	2"	DOWN TO FLOOR BELOW	SW-18.10	2"	DOWN FROM FLOOR ABOVE	PV-13.6	2"	UP FROM FLOOR BELOW			

NUMBERED NOTES:

(THIS DRAWING ONLY)

1. FOR CONTINUATION SEE DETAIL 28 ON DRAWING P2.4.
2. CONNECT TO EXISTING CW AND HW PIPING IN WALL AND ROUTE TO LAVATORY L-1.
3. CONNECT 1/2" OXYGEN, 3/4" VACUUM, AND 1/2" MEDICAL AIR TO HEADWALL. EACH HEADWALL CONTAINS (2) OXYGEN OUTLETS, (2) VACUUM INLETS, AND (1) MEDICAL AIR OUTLET.
4. CONNECT 1/2" OXYGEN, 3/4" VACUUM, AND 1/2" MEDICAL AIR TO HEADWALL. EACH HEADWALL CONTAINS (3) OXYGEN OUTLETS, (3) VACUUM INLETS, AND (1) MEDICAL AIR OUTLET.
5. CORE FLOOR FOR PIPING, TYPICAL.
6. PLUMBING FIXTURE PROVIDES HANDWASHING FUNCTION FOR ROOM/SPACE IN WHICH IT IS INSTALLED.
7. CONNECT TO EXISTING WASTE PIPING IN WALL AND ROUTE TO LAVATORY L-1.
8. INSTALL TRIM AT 6" ABOVE COUNTERTOP. PIPE DRAIN FROM ATMOSPHERIC PORT WITH CHROME PLATED BRASS PIPE OR STAINLESS STEEL TUBING. SPILL DRAIN INTO SINK.
9. ROUTE 2" WASTE PIPING FROM LAVATORY L-2 BELOW EXHAUST DUCT AND WALL REGISTER.

40 SECOND FLOOR PLUMBING PLAN

SCALE 1/4" = 1' - 0"

N

4 2 0 8
3 1 4

2207008R.DWG 20220610 P2.2.DWG 6/15/2022 1:34PM ©IRJ ENGINEERS, INC.

VENTURA COUNTY HEALTH CARE AGENCY

PUBLIC WORKS VENTURA COUNTY

ENGINEERING SERVICES

RASMUSSEN & ASSOCIATES
Architecture
Planning
Interiors
21 S. California Street
Fourth Floor
Ventura, California 93001
(805) 648-1234

IRJ ENGINEERS, INC.
MECHANICAL & ELECTRICAL ENGINEERS
4517 MARKET STREET, SUITE 1B VENTURA, CALIFORNIA 93003
(805) 642-2355

FOR PLAN REVIEW ONLY

PROFESSIONAL SEALS

PERMIT APPROVAL STAMP

REVIEWED IN ACCORDANCE WITH THE REQUIREMENTS OF T24, CCR
APPROVED
Department of Health Care Access and Information
FACILITIES DEVELOPMENT DIVISION
9/28/2022, 3:17:57 PM
H202495-56-00
Laura Baldrati

PERMIT NO HCAI #H202495-56-00

NO	REVISION	DATE
△		

PUBLIC WORKS PROJECT MANAGER

CONSULTANT PROJECT MANAGER
Jay Lomagno

DRAWN BY	CHECKED BY
CONSULTANT JOB NO A000495	DATE 06/15/2022

PROJECT TITLE AND ADDRESS

VENTURA COUNTY MEDICAL CENTER PEDIATRIC UNIT

300 HILLMONT AVE
VENTURA, CA 93003

COUNTY SPEC NUMBER
CP21-04

COUNTY PROJECT NUMBER
P6T20009

COUNTY DWG NO

SHEET 52 OF 89

SHEET TITLE
SECOND FLOOR PLUMBING PLAN

SHEET NO
P2.2

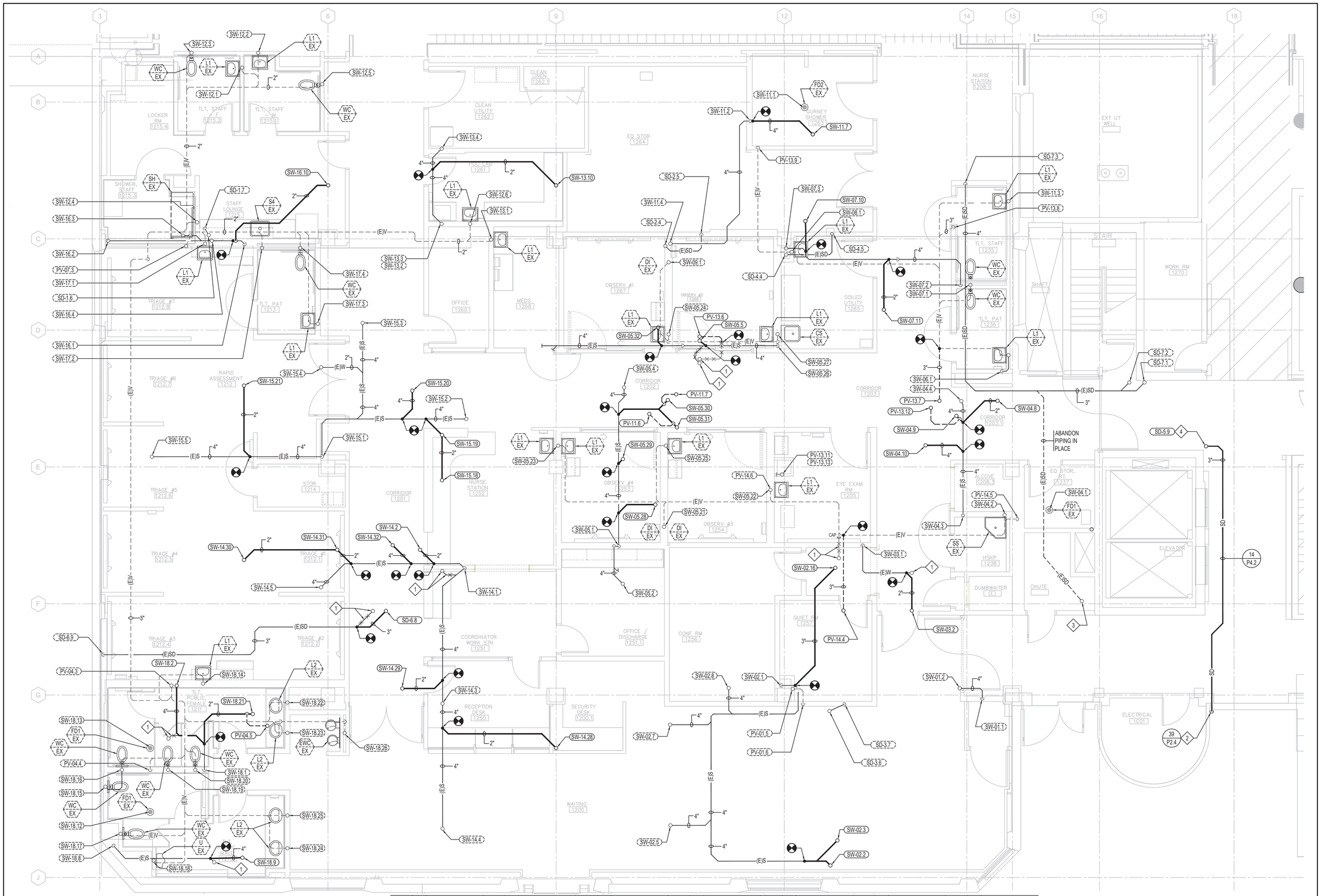

RISER TAG	SIZE	REMARKS	RISER TAG	SIZE	REMARKS	RISER TAG	SIZE	REMARKS	RISER TAG	SIZE	REMARKS	RISER TAG	SIZE	REMARKS	RISER TAG	SIZE	REMARKS	RISER TAG	SIZE	REMARKS
SW-01.1	4"	DOWN TO FLOOR BELOW	SW-05.21	2"	DOWN TO FLOOR BELOW	SW-11.3	2"	DOWN TO FLOOR BELOW	SW-14.31	2"	DOWN FROM FLOOR ABOVE	SW-18.8	4"	DOWN TO FLOOR BELOW	PV-07.3	2"	UP TO FLOOR ABOVE	SD-6.8	3"	DOWN FROM FLOOR ABOVE
SW-01.2	4"	DOWN FROM FLOOR ABOVE	SW-05.22	2"	DOWN TO FLOOR BELOW	SW-11.4	4"	DOWN FROM FLOOR ABOVE	SW-14.32	4"	DOWN FROM FLOOR ABOVE	SW-18.9	4"	DOWN FROM FLOOR ABOVE	PV-11.6	2"	UP TO FLOOR ABOVE	SD-6.9	3"	DOWN TO BELOW GRADE
SW-02.1	4"	DOWN TO FLOOR BELOW	SW-05.23	2"	DOWN TO FLOOR BELOW	SW-11.7	4"	DOWN FROM FLOOR ABOVE	SW-15.1	4"	DOWN TO FLOOR BELOW	SW-18.12	2"	DOWN TO FLOOR BELOW	PV-11.7	2"	UP TO FLOOR ABOVE	SD-7.1	3"	DOWN FROM FLOOR ABOVE
SW-02.2	4"	DOWN FROM FLOOR ABOVE	SW-05.24	2"	DOWN TO FLOOR BELOW	SW-12.1	2"	DOWN TO FLOOR BELOW	SW-15.2	4"	DOWN FROM FLOOR ABOVE	SW-18.13	2"	DOWN TO FLOOR BELOW	PV-13.6	2"	UP TO FLOOR ABOVE	SD-7.2	3"	DOWN FROM FLOOR ABOVE
SW-02.3	4"	DOWN FROM FLOOR ABOVE	SW-05.25	2"	DOWN TO FLOOR BELOW	SW-12.2	2"	DOWN TO FLOOR BELOW	SW-15.3	4"	DOWN FROM FLOOR ABOVE	SW-18.14	2"	DOWN TO FLOOR BELOW	PV-13.7	3"	UP TO FLOOR ABOVE	SD-7.3	4"	DOWN TO FLOOR BELOW
SW-02.5	4"	DOWN FROM FLOOR ABOVE	SW-05.26	4"	DOWN TO FLOOR BELOW	SW-12.3	4"	DOWN TO FLOOR BELOW	SW-15.4	2"	DOWN TO FLOOR BELOW	SW-18.15	4"	DOWN TO FLOOR BELOW	PV-13.8	3"	UP FROM FLOOR BELOW			
SW-02.7	4"	DOWN FROM FLOOR ABOVE	SW-05.27	4"	DOWN TO FLOOR BELOW	SW-12.4	2"	DOWN TO FLOOR BELOW	SW-15.5	2"	DOWN FROM FLOOR ABOVE	SW-18.16	4"	DOWN TO FLOOR BELOW	PV-13.9	2"	UP FROM FLOOR BELOW			
SW-02.8	4"	DOWN FROM FLOOR ABOVE	SW-05.28	4"	DOWN FROM FLOOR ABOVE	SW-12.5	4"	DOWN FROM FLOOR ABOVE	SW-15.18	2"	DOWN FROM FLOOR ABOVE	SW-18.17	4"	DOWN TO FLOOR BELOW	PV-13.11	2"	UP FROM FLOOR BELOW			
SW-02.16	3"	DOWN FROM FLOOR ABOVE	SW-05.29	2"	DOWN FROM FLOOR ABOVE	SW-12.6	2"	DOWN TO FLOOR BELOW	SW-15.19	2"	DOWN FROM FLOOR ABOVE	SW-18.18	2"	DOWN TO FLOOR BELOW	PV-13.12	2"	UP TO FLOOR ABOVE			
SW-03.1	2"	DOWN TO FLOOR BELOW	SW-05.30	2"	DOWN FROM FLOOR ABOVE	SW-13.1	2"	DOWN TO FLOOR BELOW	SW-15.20	4"	DOWN FROM FLOOR ABOVE	SW-18.19	4"	DOWN TO FLOOR BELOW	PV-13.13	2"	UP FROM FLOOR BELOW			
SW-03.2	2"	DOWN FROM FLOOR ABOVE	SW-05.31	2"	DOWN FROM FLOOR ABOVE	SW-13.2	4"	DOWN TO FLOOR BELOW	SW-15.21	2"	DOWN FROM FLOOR ABOVE	SW-18.20	4"	DOWN TO FLOOR BELOW	PV-14.4	3"	UP TO FLOOR ABOVE			
SW-04.1	2"	DOWN TO FLOOR BELOW	SW-05.32	4"	DOWN FROM FLOOR ABOVE	SW-13.3	4"	DOWN TO FLOOR BELOW	SW-16.1	4"	DOWN TO FLOOR BELOW	SW-18.21	2"	DOWN FROM FLOOR ABOVE	PV-14.5	2"	UP FROM FLOOR BELOW			
SW-04.2	3"	DOWN FROM FLOOR ABOVE	SW-06.1	2"	DOWN TO FLOOR BELOW	SW-13.4	4"	DOWN FROM FLOOR ABOVE	SW-16.2	2"	DOWN TO FLOOR BELOW	SW-18.22	2"	DOWN TO FLOOR BELOW	PV-14.6	2"	UP FROM FLOOR BELOW			
SW-04.3	4"	DOWN TO FLOOR BELOW	SW-07.1	4"	DOWN TO FLOOR BELOW	SW-13.10	2"	DOWN FROM FLOOR ABOVE	SW-16.3	2"	DOWN FROM FLOOR ABOVE	SW-18.23	2"	DOWN TO FLOOR BELOW	SD-1.6	3"	DOWN FROM FLOOR ABOVE			
SW-04.4	4"	DOWN FROM FLOOR ABOVE	SW-07.2	4"	DOWN TO FLOOR BELOW	SW-14.1	4"	DOWN TO FLOOR BELOW	SW-16.4	4"	DOWN FROM FLOOR ABOVE	SW-18.24	2"	DOWN TO FLOOR BELOW	SD-1.7	3"	DOWN TO FLOOR BELOW			
SW-04.8	2"	DOWN FROM FLOOR ABOVE	SW-07.3	4"	DOWN FROM FLOOR ABOVE	SW-14.2	2"	DOWN FROM FLOOR ABOVE	SW-16.8	4"	DOWN FROM FLOOR ABOVE	SW-18.25	2"	DOWN TO FLOOR BELOW	SD-2.4	3"	DOWN FROM FLOOR ABOVE			
SW-04.9	2"	DOWN FROM FLOOR ABOVE	SW-07.10	2"	DOWN FROM FLOOR ABOVE	SW-14.3	4"	DOWN FROM FLOOR ABOVE	SW-17.1	2"	DOWN TO FLOOR BELOW	SW-18.26	2"	DOWN TO FLOOR BELOW	SD-2.5	3"	DOWN TO FLOOR BELOW			
SW-04.10	4"	DOWN FROM FLOOR ABOVE	SW-07.11	2"	DOWN FROM FLOOR ABOVE	SW-14.4	4"	DOWN FROM FLOOR ABOVE	SW-17.2	2"	DOWN TO FLOOR BELOW	PV-01.5	3"	UP TO FLOOR ABOVE	SD-3.6	3"	DOWN FROM FLOOR ABOVE			
SW-05.1	4"	DOWN TO FLOOR BELOW	SW-08.1	2"	DOWN TO FLOOR BELOW	SW-14.5	4"	DOWN FROM FLOOR ABOVE	SW-17.3	2"	DOWN TO FLOOR BELOW	PV-01.6	3"	UP FROM FLOOR BELOW	SD-3.7	3"	DOWN TO FLOOR BELOW			
SW-05.2	4"	DOWN FROM FLOOR ABOVE	SW-09.1	2"	DOWN TO FLOOR BELOW	SW-14.28	2"	DOWN FROM FLOOR ABOVE	SW-17.4	4"	DOWN TO FLOOR BELOW	PV-04.3	3"	UP TO FLOOR ABOVE	SD-4.4	3"	DOWN FROM FLOOR ABOVE			
SW-05.4	4"	DOWN FROM FLOOR ABOVE	SW-11.1	4"	DOWN TO FLOOR BELOW	SW-14.29	2"	DOWN FROM FLOOR ABOVE	SW-18.1	4"	DOWN TO FLOOR BELOW	PV-04.4	2"	UP FROM FLOOR BELOW	SD-4.5	3"	DOWN FROM FLOOR ABOVE			
SW-05.5	2"	DOWN FROM FLOOR ABOVE	SW-11.2	4"	DOWN TO FLOOR BELOW	SW-14.30	2"	DOWN FROM FLOOR ABOVE	SW-18.2	4"	DOWN TO FLOOR BELOW	PV-04.5	2"	UP TO FLOOR ABOVE	SD-5.9	3"	DOWN FROM FLOOR ABOVE			

NUMBERED NOTE:

(THIS DRAWING ONLY)

1. DEMOLISH AND CAP THE BRANCH WASTE/SOIL/VENT/STORM DRAINAGE PIPING AS INDICATED. PATCH ABANDONED PENETRATIONS THRU CONCRETE FLOOR.
2. TERMINATE STORM DRAIN PIPING WITH NOZZLE NZ-1 AND SPILL TO GRADE WITH SPLASH BLOCK.
3. ABANDON STORM WATER DRAIN RISER IN PLACE WITHIN SHAFT, CAP PIPE AT BOTTOM OF RISER.
4. FOR CONTINUATION SEE DETAIL 20 ON DRAWING P2.4.

WC EX	EXISTING WATER CLOSET, FLOOR MOUNTED.	S4 EX	EXISTING SINK, COUNTER MOUNTED.	FD1 EX	EXISTING FLOOR DRAIN.
WC EX	EXISTING URINAL, WALL MOUNTED.	CS EX	EXISTING CLINIC SINK, WALL MOUNTED.	FD2 EX	EXISTING FLOOR DRAIN.
U EX	EXISTING LAVATORY, WALL MOUNTED.	SS EX	EXISTING SERVICE SINK, FLOOR MOUNTED.		
L2 EX	EXISTING LAVATORY, COUNTER MOUNTED.	EWC EX	EXISTING ELECTRIC WATER COOLER.		
SH EX	EXISTING SHOWER.	DI EX	EXISTING DIALYSIS BOX.		

N

40 FIRST FLOOR PLUMBING PLAN

SCALE 1/4" = 1' - 0"

4 2 0 8
3 1 4

22027008R.DWG 20220613 P2.3.DWG 6/15/2022 2:40PM IRJ ENGINEERS, INC.

VENTURA COUNTY HEALTH CARE AGENCY

PUBLIC WORKS VENTURA COUNTY

ENGINEERING SERVICES

RASMUSSEN & ASSOCIATES
Architecture
Planning
Interiors
21 S. California Street
Fourth Floor
Ventura, California 93001
(805) 648-1234

JOB No. 2027-00
IRJ ENGINEERS, INC.
MECHANICAL & ELECTRICAL ENGINEERS
4517 MARKET STREET, SUITE 1B VENTURA, CALIFORNIA 93003
(805) 642-2355

FOR PLAN REVIEW ONLY

PROFESSIONAL SEALS

PERMIT APPROVAL STAMP

REVIEWED IN ACCORDANCE WITH THE REQUIREMENTS OF T24, CCR
APPROVED
Department of Health Care Access and Information
FACILITIES DEVELOPMENT DIVISION
9/28/2022, 3:17:57 PM
H202495-56-00
Laura Baldrati

PERMIT NO HCAI #H202495-56-00

NO	REVISION	DATE
△		

PUBLIC WORKS PROJECT MANAGER

CONSULTANT PROJECT MANAGER
Jay Lomagno

DRAWN BY	CHECKED BY
CONSULTANT JOB NO A000495	DATE 06/15/2022

PROJECT TITLE AND ADDRESS

VENTURA COUNTY MEDICAL CENTER PEDIATRIC UNIT

300 HILLMONT AVE
VENTURA, CA 93003

COUNTY SPEC NUMBER
CP21-04

COUNTY PROJECT NUMBER
P6T20009

COUNTY DWG NO | SHEET 53 OF 89

SHEET TITLE
FIRST FLOOR PLUMBING PLAN

SHEET NO
P2.3

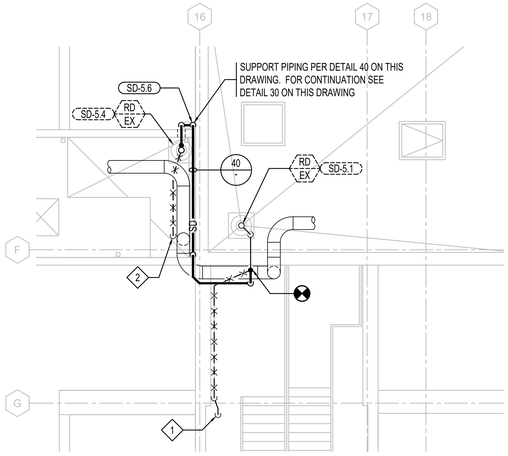

NUMBERED NOTES:

(THIS DRAWING ONLY)

1. DEMOLISH PIPE THROUGH FLOOR. PATCH FLOOR.
2. CAP TOP OF RISER. ABANDON PIPING WITHIN SHAFT.

RISER TAG	SIZE	REMARKS
SD-5.1	3"	DOWN THRU ROOF
SD-5.4	3"	DOWN TO FLOOR BELOW
SD-5.6	3"	DOWN THRU ROOF

38 PARTIAL ROOF PLUMBING PLAN

SCALE 1/4" = 1' - 0"

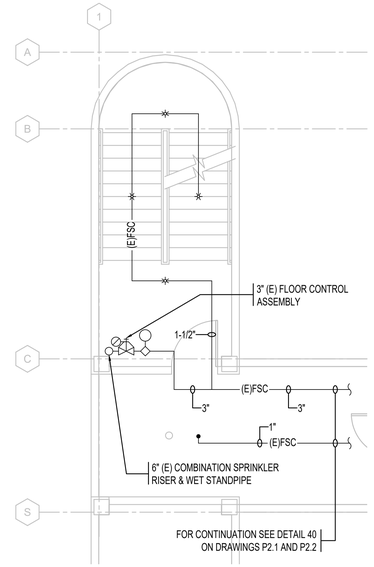

28 PARTIAL SECOND FLOOR PLUMBING PLAN

SCALE 1/4" = 1' - 0"

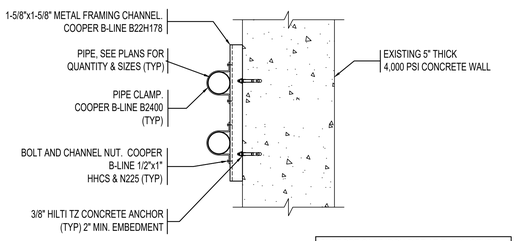

SUPPORT CAST IRON PIPE AT EVERY OTHER JOINT UNLESS OVER 4 FEET THEN SUPPORT EACH JOINT.

39 PIPE MOUNTING - WALL

SCALE 1/4" = 1' - 0"

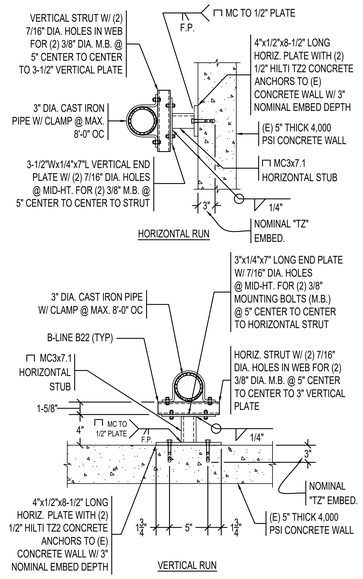

40 PIPE MOUNTING - WALL

SCALE 1/4" = 1' - 0"

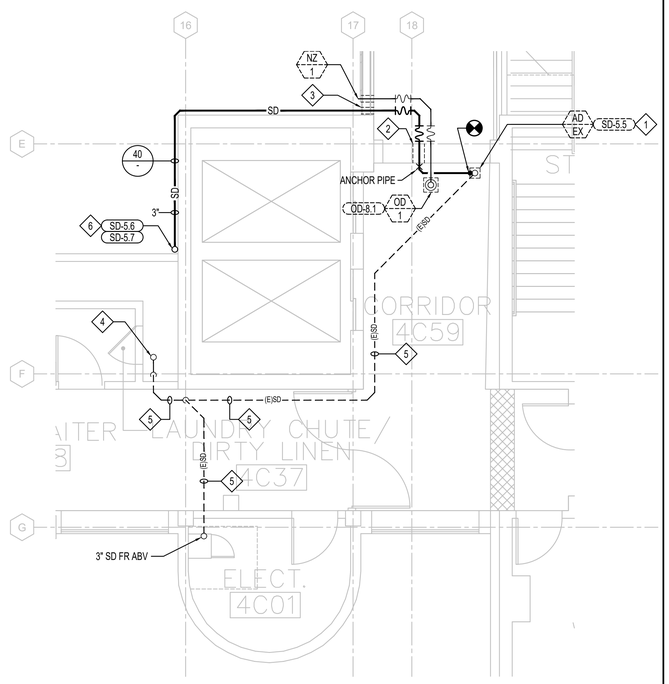

NUMBERED NOTES:

(THIS DRAWING ONLY)

1. DRAIN SERVES ELEVATOR LANDING ABOVE.
2. CORE WALL FOR PIPING.
3. PIPE THROUGH WALL, FLASH, COUNTER FLASH, AND SEAL WATERTIGHT.
4. ABANDON STORM WATER DRAIN RISER IN PLACE WITHIN SHAFT.
5. ABANDON STORM DRAIN PIPING IN PLACE.
6. FOR CONTINUATION SEE DETAIL 20 ON THIS DRAWING.

RISER TAG	SIZE	REMARKS
SD-5.5	3"	DOWN THRU ROOF
SD-5.6	3"	DOWN FROM FLOOR ABOVE
SD-5.7	3"	DOWN TO FLOOR BELOW
OD-8.1	3"	DOWN THRU ROOF

30 PARTIAL FOURTH FLOOR PLUMBING PLAN

SCALE 1/4" = 1' - 0"

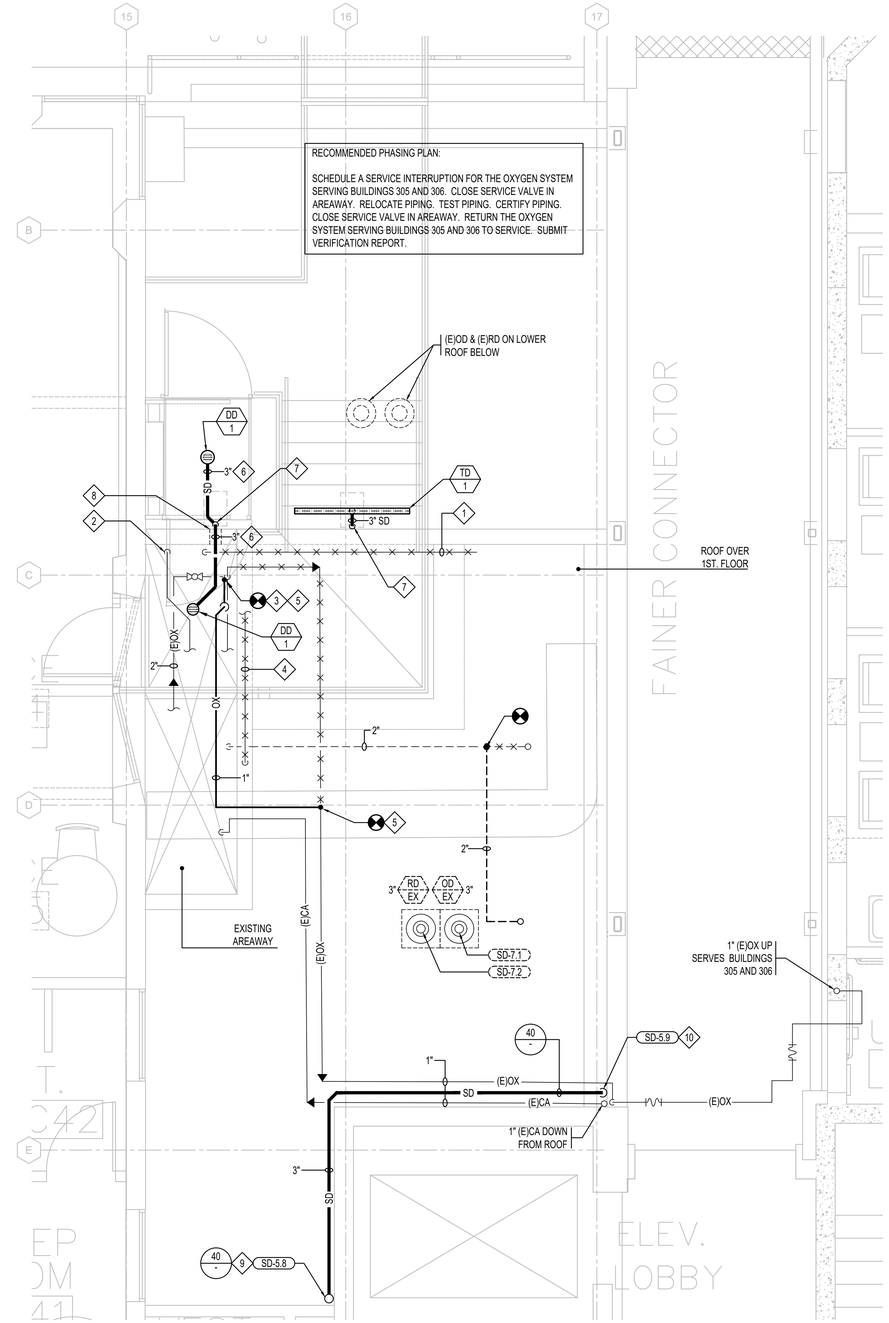

NUMBERED NOTES:

(THIS DRAWING ONLY)

1. DEMOLISH ABANDONED PIPING ON PARAPET TO CLEAR AREA FOR INSTALLATION OF BRIDGE. CAP ABANDONED PIPING IN AREAWAY.
2. DEMOLISH ABANDONED PIPING IN AREAWAY TO CLEAR AREA FOR INSTALLATION OF BRIDGE. CAP ABANDONED PIPING IN AREAWAY.
3. 1" EXISTING OXYGEN UP FROM BASEMENT, SHUTOFF VALVE IN BASEMENT MECHANICAL ROOM 0C11.
4. DEMOLISH ABANDONED PIPING ALONG EDGE OF AREAWAY TO CLEAR AREA FOR INSTALLATION OF BRIDGE. CAP ABANDONED PIPING IN AREAWAY.
5. PROVIDE PURGE PORTS AT POINT OF CONNECTION FOR PURGING AND TESTING PIPING.
6. SUSPEND PIPING BELOW STRUCTURE.
7. ROUTE 3" SD DOWN NORTH FACE OF WALL AND TERMINATE WITH 1/8 BEND. SUPPORT PIPING FROM WALL WITH METAL FRAMING CHANNEL. SPILL DRAIN TO LOWER ROOF WITH SPLASH BLOCK.
8. CORE WALL.
9. FOR CONTINUATION SEE DETAIL 30 ON THIS DRAWING .
10. FOR CONTINUATION SEE DETAIL 40 ON DRAWING P2.3.

RISER TAG	SIZE	REMARKS
SD-7.1	3"	DOWN TO FLOOR BELOW
SD-7.2	3"	DOWN TO FLOOR BELOW
SD-5.8	3"	DOWN FROM FLOOR ABOVE
SD-5.9	3"	DOWN TO FLOOR BELOW

20 LOW ROOF PLUMBING PLAN

SCALE 3/8" = 1' - 0"

VENTURA COUNTY HEALTH CARE AGENCY

PUBLIC VENTURA COUNTY WORKS

ENGINEERING SERVICES

RASMUSSEN & ASSOCIATES
Architecture
Planning
Interiors
21 S. California Street
Fourth Floor
Ventura, California 93001
(805) 648-1234

IRJ ENGINEERS, INC.
MECHANICAL & ELECTRICAL ENGINEERS
4517 MARKET STREET, SUITE 1B VENTURA, CALIFORNIA 93003
(805) 642-2355

FOR PLAN REVIEW ONLY

PROFESSIONAL SEALS

PERMIT APPROVAL STAMP

REVIEWED IN ACCORDANCE WITH THE REQUIREMENTS OF T24, CCR
APPROVED
Department of Health Care Access and Information
FACILITIES DEVELOPMENT DIVISION
9/28/2022, 3:17:57 PM
H202495-56-00
Laura Baldrati

PERMIT NO HCAI #H202495-56-00

NO	REVISION	DATE
△	HCAI RESUBMITTAL	09/19/2022

PUBLIC WORKS PROJECT MANAGER

CONSULTANT PROJECT MANAGER
Jay Lomagno

DRAWN BY	CHECKED BY
-	-

CONSULTANT JOB NO	DATE
A000495	06/15/2022

PROJECT TITLE AND ADDRESS

VENTURA COUNTY MEDICAL CENTER PEDIATRIC UNIT

300 HILLMONT AVE
VENTURA, CA 93003

COUNTY SPEC NUMBER
CP21-04

COUNTY PROJECT NUMBER
P6T20009

COUNTY DWG NO — SHEET 54 OF 89

SHEET TITLE
LOW ROOF PLUMBING PLAN ,PARTIAL SECOND FLOOR PLUMBING PLAN

SHEET NO
P2.4

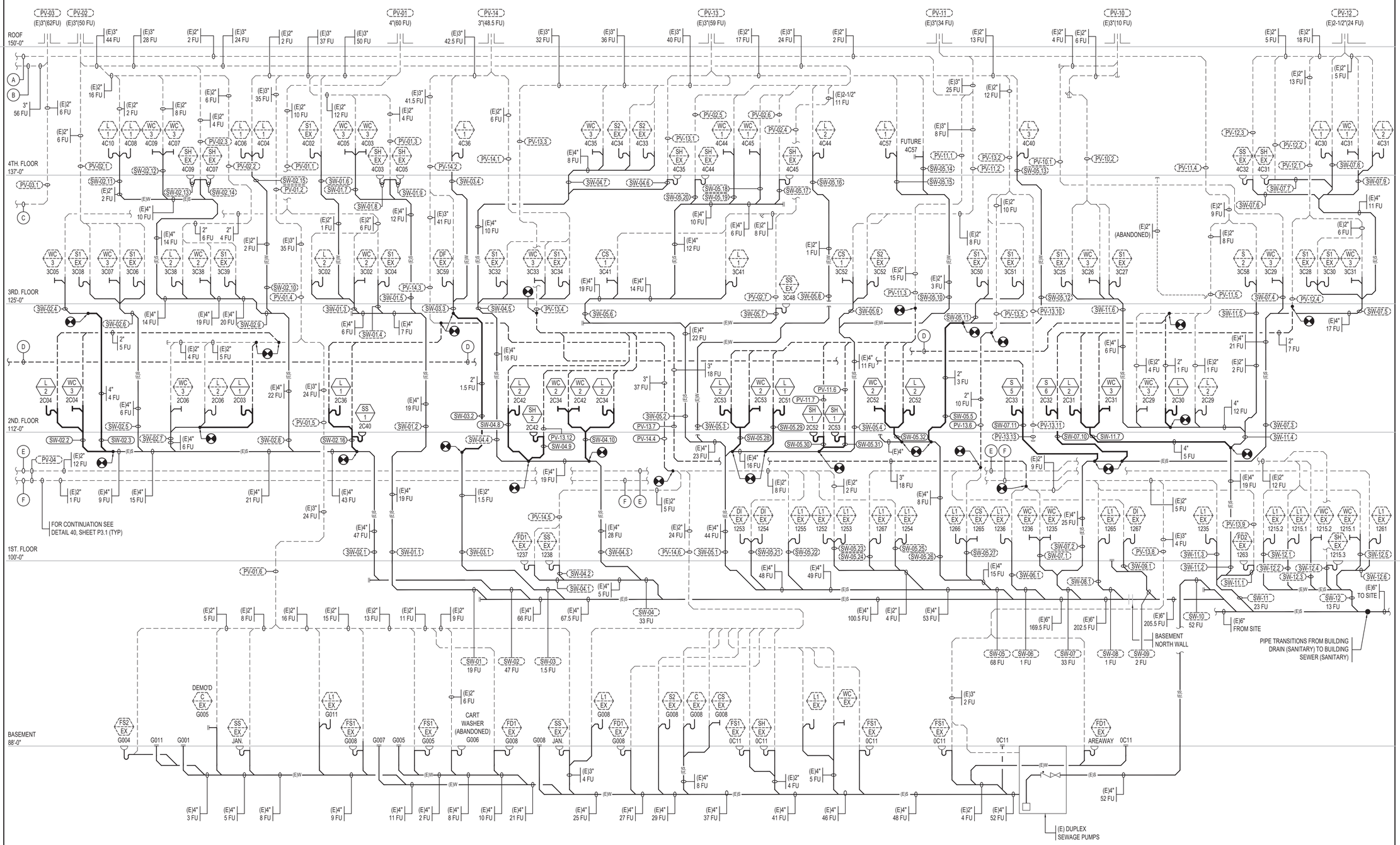

40 SOIL/WASTE/VENT RISER DIAGRAM

NTS

VENTURA COUNTY
HEALTH CARE AGENCY

PUBLIC
VENTURA COUNTY
WORKS

ENGINEERING SERVICES

RASMUSSEN & ASSOCIATES
Architecture
Planning
Interiors
21 S. California Street
Fourth Floor
Ventura, California 93001
(805) 648-1234

IRJ ENGINEERS, INC.
MECHANICAL & ELECTRICAL ENGINEERS
4517 MARKET STREET, SUITE 1B VENTURA, CALIFORNIA 93003
(805) 642-2355

FOR PLAN REVIEW ONLY

PROFESSIONAL SEALS

PERMIT APPROVAL STAMP

REVIEWED IN ACCORDANCE WITH THE REQUIREMENTS OF T24, CCR
APPROVED
Department of Health Care Access and Information
FACILITIES DEVELOPMENT DIVISION
9/28/2022, 3:17:57 PM
H202495-56-00
Laura Baldrati

PERMIT NO HCAI #H202495-56-00

NO	REVISION	DATE
△		

PUBLIC WORKS PROJECT MANAGER

CONSULTANT PROJECT MANAGER
Jay Lomagno

DRAWN BY	CHECKED BY
CONSULTANT JOB NO A000495	DATE 06/15/2022

PROJECT TITLE AND ADDRESS

VENTURA COUNTY MEDICAL CENTER PEDIATRIC UNIT

300 HILLMONT AVE
VENTURA, CA 93003

COUNTY SPEC NUMBER
CP21-04

COUNTY PROJECT NUMBER
P6T20009

COUNTY DWG NO | SHEET 55 OF 89

SHEET TITLE
SOIL/WASTE/VENT RISER DIAGRAM

SHEET NO
P3.1

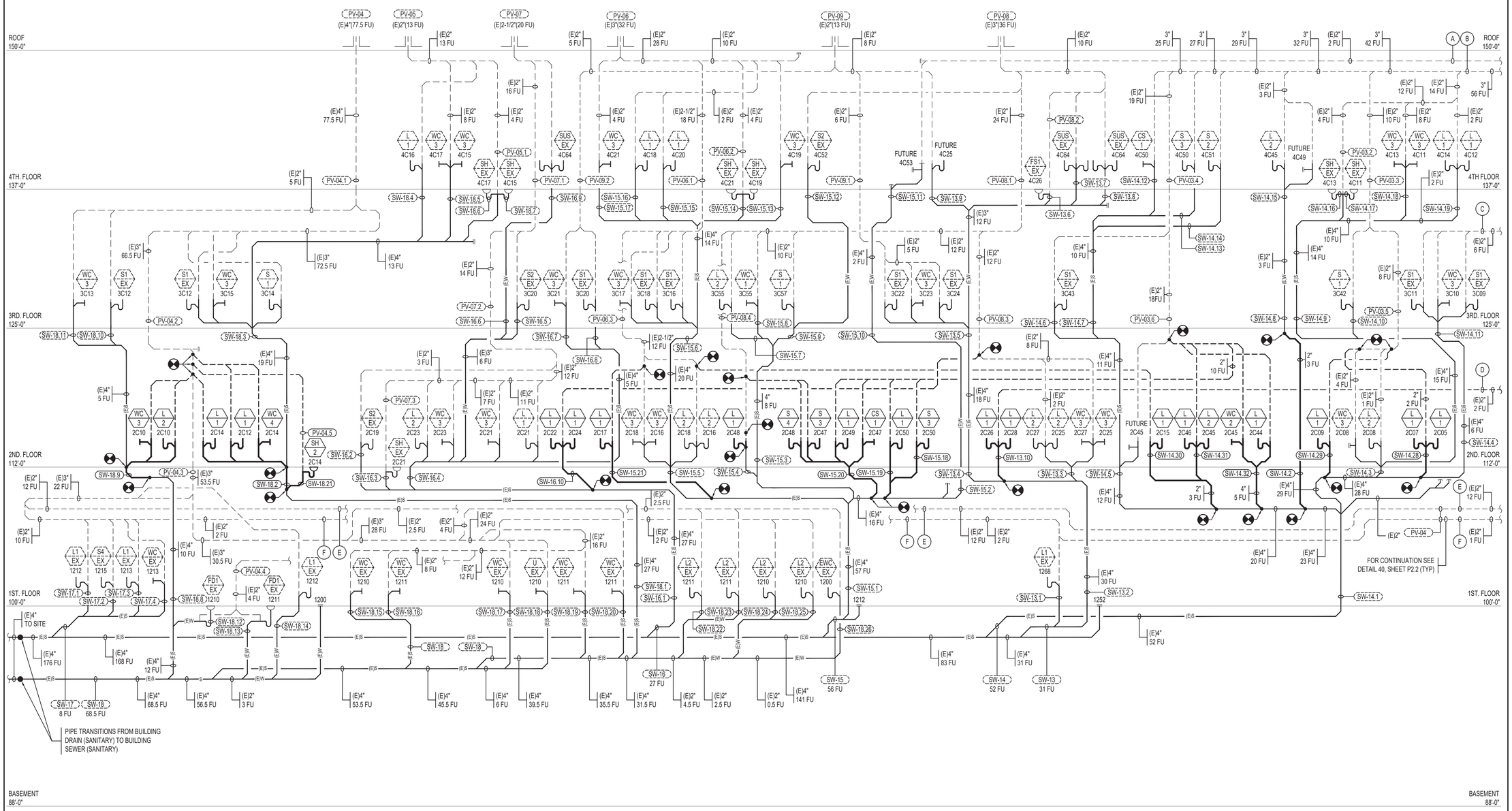

40 SOIL/WASTE/VENT RISER DIAGRAM

NTS

VENTURA COUNTY
HEALTH CARE AGENCY

PUBLIC
VENTURA COUNTY
WORKS

ENGINEERING SERVICES

RASMUSSEN & ASSOCIATES
Architecture
Planning
Interiors
21 S. California Street
Fourth Floor
Ventura, California 93001
(805) 648-1234

IRJ ENGINEERS, INC.
MECHANICAL & ELECTRICAL ENGINEERS
4517 MARKET STREET, SUITE 1B VENTURA, CALIFORNIA 93003
(805) 642-2355

JOB No. 2027-00

FOR PLAN REVIEW ONLY

PROFESSIONAL SEALS

PERMIT APPROVAL STAMP

REVIEWED IN ACCORDANCE WITH THE REQUIREMENTS OF T24, CCR
APPROVED
Department of Health Care Access and Information
FACILITIES DEVELOPMENT DIVISION
9/28/2022, 3:17:57 PM
H202495-56-00
Laura Baldrati

PERMIT NO HCAI #H202495-56-00

NO	REVISION	DATE
△		

PUBLIC WORKS PROJECT MANAGER

CONSULTANT PROJECT MANAGER
Jay Lomagno

DRAWN BY	CHECKED BY
CONSULTANT JOB NO A000495	DATE 06/15/2022

PROJECT TITLE AND ADDRESS

VENTURA COUNTY MEDICAL CENTER PEDIATRIC UNIT

300 HILLMONT AVE
VENTURA, CA 93003

COUNTY SPEC NUMBER
CP21-04

COUNTY PROJECT NUMBER
P6T20009

COUNTY DWG NO | SHEET 56 OF 89

SHEET TITLE
SOIL/WASTE/VENT RISER DIAGRAM

SHEET NO
P3.2

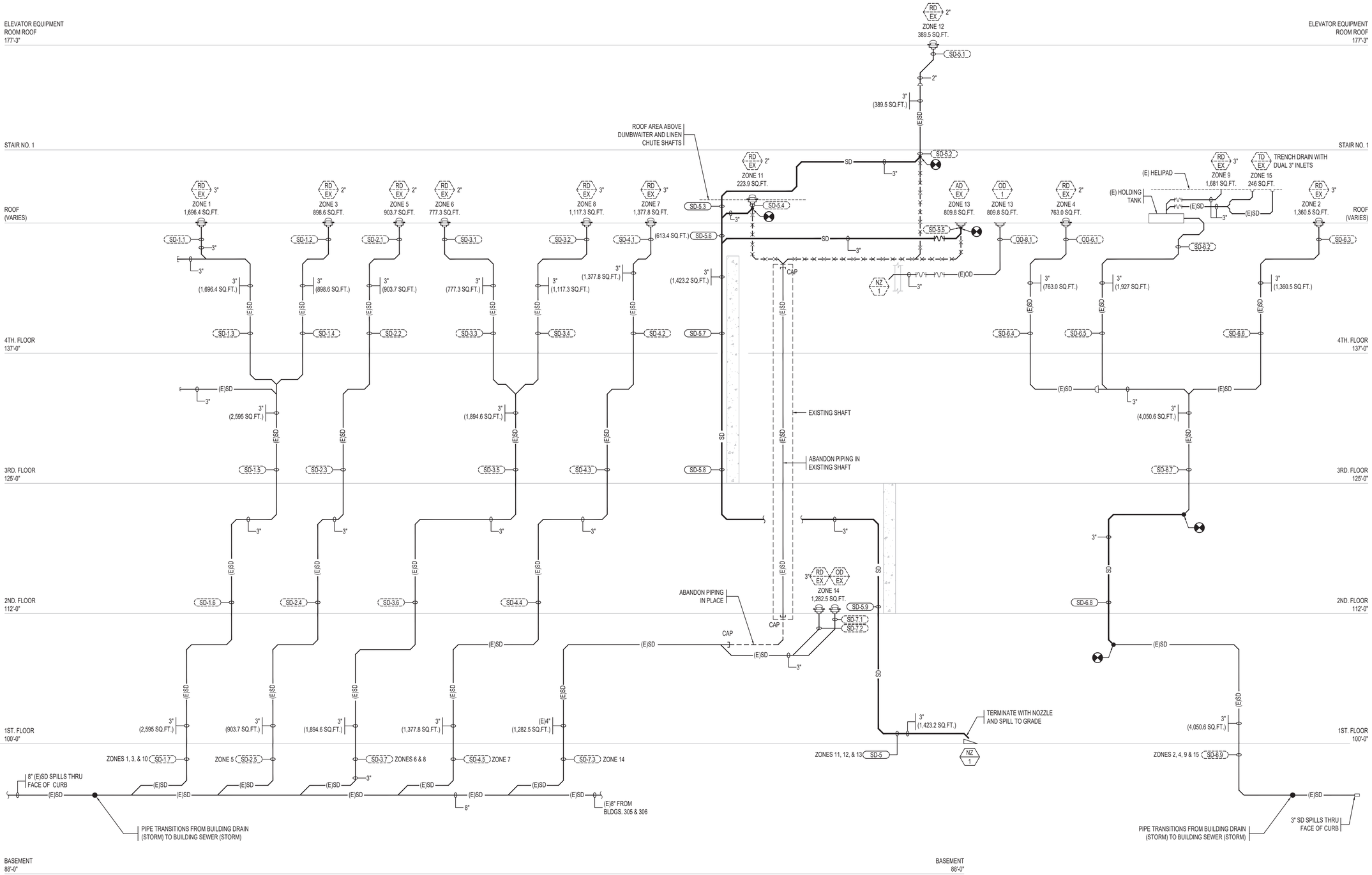

40 STORM DRAINAGE RISER DIAGRAM

NTS

VENTURA COUNTY HEALTH CARE AGENCY

PUBLIC VENTURA COUNTY WORKS

ENGINEERING SERVICES

RASMUSSEN & ASSOCIATES
Architecture
Planning
Interiors
21 S. California Street
Fourth Floor
Ventura, California 93001
(805) 648-1234

IRJ ENGINEERS, INC.
MECHANICAL & ELECTRICAL ENGINEERS
4517 MARKET STREET, SUITE 1B VENTURA, CALIFORNIA 93003
(805) 642-2355

JOB No. 2027-00

FOR PLAN REVIEW ONLY

PROFESSIONAL SEALS

PERMIT APPROVAL STAMP

REVIEWED IN ACCORDANCE WITH THE REQUIREMENTS OF T24, CCR
APPROVED
Department of Health Care Access and Information
FACILITIES DEVELOPMENT DIVISION
9/28/2022, 3:17:57 PM
H202495-56-00
Laura Baldrati

PERMIT NO HCAI #H202495-56-00

NO	REVISION	DATE
△		

PUBLIC WORKS PROJECT MANAGER

CONSULTANT PROJECT MANAGER
Jay Lomagno

DRAWN BY	CHECKED BY
CONSULTANT JOB NO A000495	DATE 06/15/2022

PROJECT TITLE AND ADDRESS

VENTURA COUNTY MEDICAL CENTER PEDIATRIC UNIT

300 HILLMONT AVE
VENTURA, CA 93003

COUNTY SPEC NUMBER
CP21-04

COUNTY PROJECT NUMBER
P6T20009

COUNTY DWG NO | SHEET 57 OF 89

SHEET TITLE
STORM DRAINAGE RISER DIAGRAM

SHEET NO
P3.3

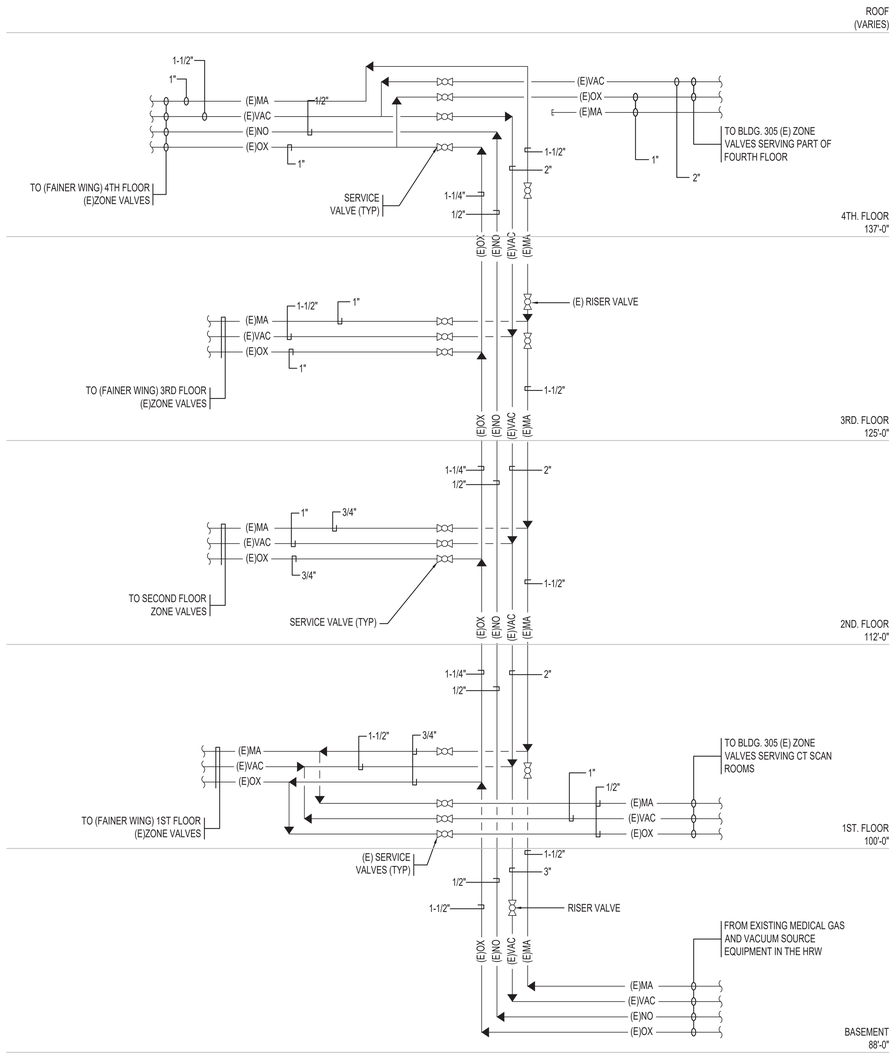

40 MEDICAL GAS & VACUUM RISER DIAGRAM

NTS

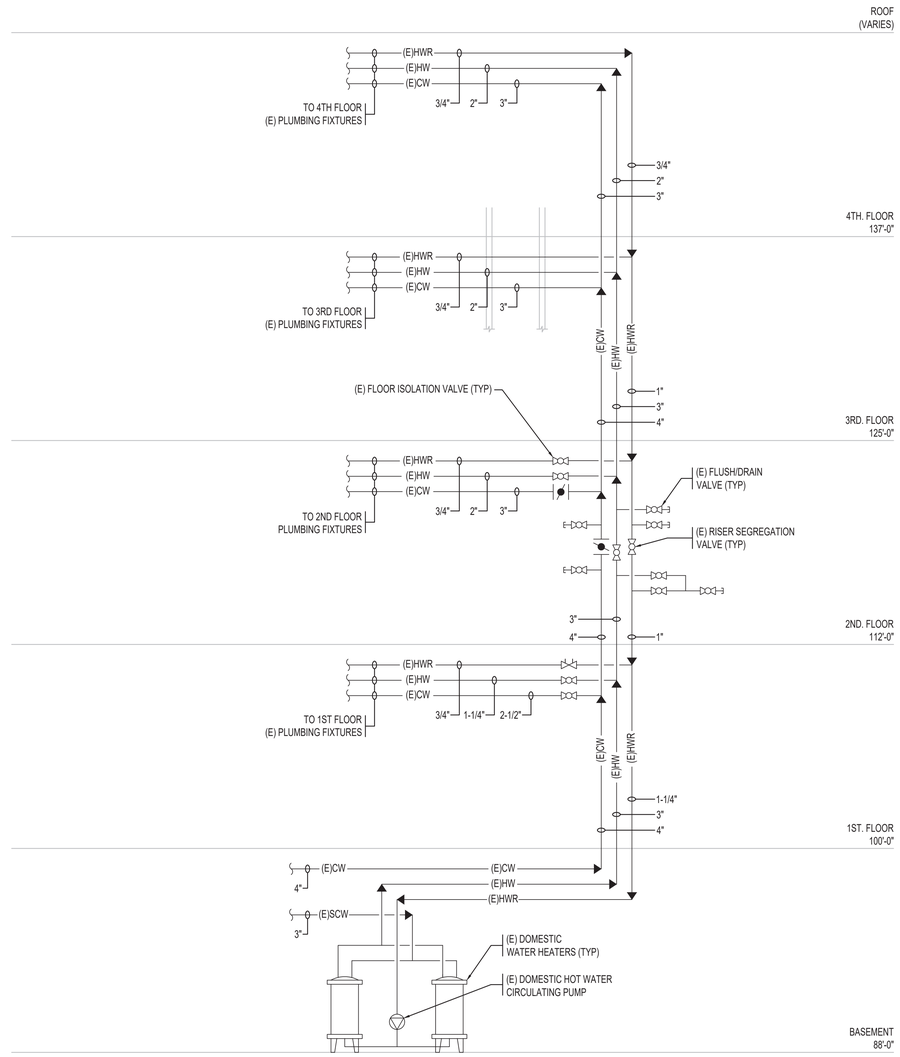

POTABLE WATER SYSTEMS FLUSHING AND DISINFECTING SEQUENCE:

1. CONFIRM THAT SECOND FLOOR EXISTING FLOOR ISOLATION VALVES ARE CLOSED.
2. FLUSH THE EXISTING COLD WATER, HOT WATER, AND HOT WATER RETURN PIPING SYSTEMS SERVING THE SECOND FLOOR. BLEED ALL AIR FROM THE PIPING SYSTEMS.
3. DISINFECT THE EXISTING COLD WATER, HOT WATER, AND HOT WATER RETURN PIPING SYSTEMS SERVING THE SECOND FLOOR FLOOR.
4. TEST THE EXISTING COLD WATER, HOT WATER, AND HOT WATER RETURN PIPING SYSTEMS SERVING THE SECOND FLOOR. REPEAT DISINFECTING IF REQUIRED.
5. FLUSH THE EXISTING COLD WATER, HOT WATER, AND HOT WATER RETURN PIPING SYSTEMS SERVING THE SECOND FLOOR.
6. RESTORE THE OPERATION OF COLD WATER, HOT WATER, AND HOT WATER RETURN PIPING SYSTEMS TO THE SECOND FLOOR.
7. TEST THE OPERATION OF ALL PLUMBING FIXTURES ON THE SECOND FLOOR.
8. ADJUST THE HOT WATER RETURN PIPING SYSTEM TO DELIVER HOT WATER TO EACH SECOND FLOOR FIXTURE SO EQUIPPED.

20 POTABLE WATER RISER DIAGRAM

NTS

VENTURA COUNTY HEALTH CARE AGENCY

PUBLIC WORKS VENTURA COUNTY

ENGINEERING SERVICES

RASMUSSEN & ASSOCIATES
Architecture
Planning
Interiors
21 S. California Street
Fourth Floor
Ventura, California 93001
(805) 648-1234

JOB No. 2027-00
IRJ ENGINEERS, INC.
MECHANICAL & ELECTRICAL ENGINEERS
4517 MARKET STREET, SUITE 1B VENTURA, CALIFORNIA 93003
(805) 642-2355

FOR PLAN REVIEW ONLY

PROFESSIONAL SEALS

LICENSED ARCHITECT JAY LOMAGNO C-20801 STATE OF CALIFORNIA

REGISTERED PROFESSIONAL ENGINEER STEVEN F. ROMOWSKY No. 23191 Exp. 12-31-22 MECHANICAL STATE OF CALIFORNIA

PERMIT APPROVAL STAMP

REVIEWED IN ACCORDANCE WITH THE REQUIREMENTS OF T24, CCR
APPROVED
Department of Health Care Access and Information
FACILITIES DEVELOPMENT DIVISION
9/28/2022, 3:17:57 PM
H202495-56-00
Laura Baldrati

PERMIT NO HCAI #H202495-56-00

NO	REVISION	DATE
△		

PUBLIC WORKS PROJECT MANAGER

CONSULTANT PROJECT MANAGER
Jay Lomagno

DRAWN BY | CHECKED BY

CONSULTANT JOB NO A000495 | DATE 06/15/2022

PROJECT TITLE AND ADDRESS

VENTURA COUNTY MEDICAL CENTER PEDIATRIC UNIT

300 HILLMONT AVE
VENTURA, CA 93003

COUNTY SPEC NUMBER
CP21-04

COUNTY PROJECT NUMBER
P6T20009

COUNTY DWG NO | SHEET 58 OF 89

SHEET TITLE
POT. WATER RISER DIAGRAM, MED. GAS & VAC. RISER DIAGRAM

SHEET NO
P3.4

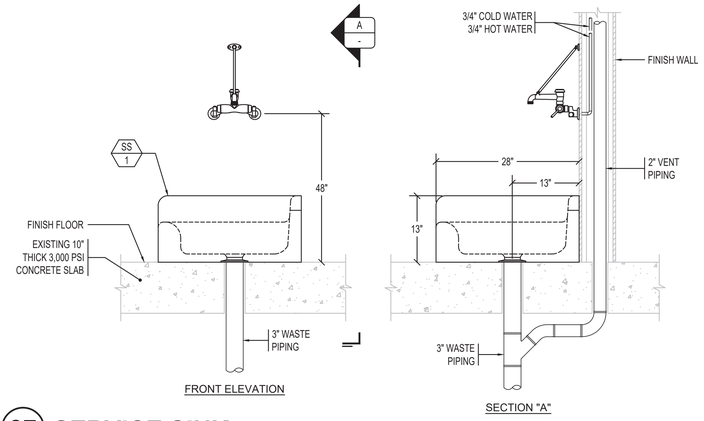

37 SERVICE SINK

NTS

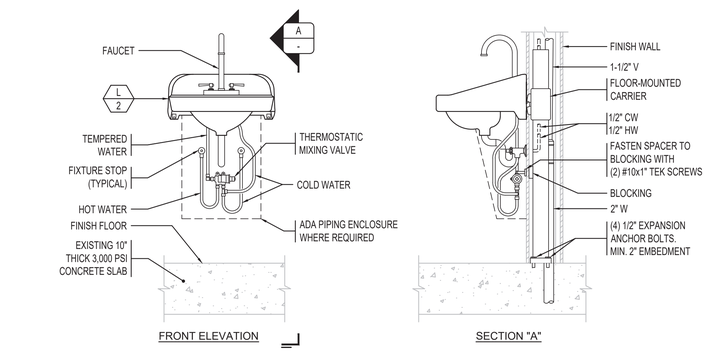

27 LAVATORY - HAND-OPERATED FAUCET

NTS

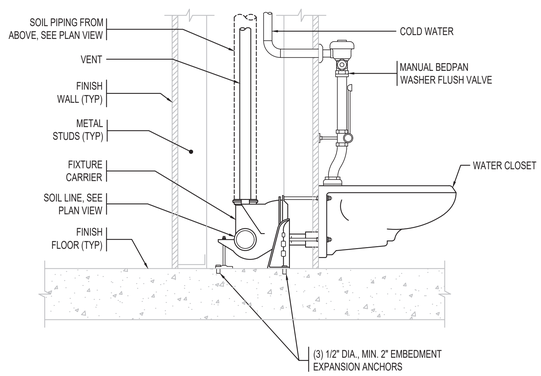

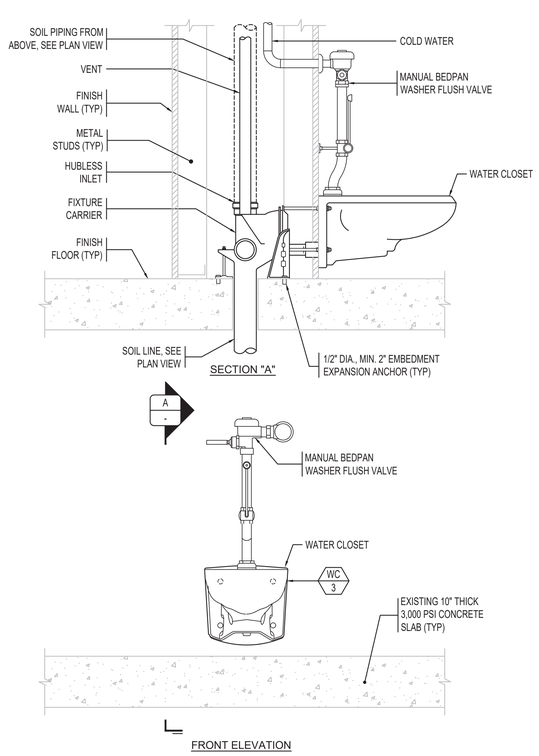

40 WALL HUNG WATER CLOSET WITH BEDPAN WASHER

NTS

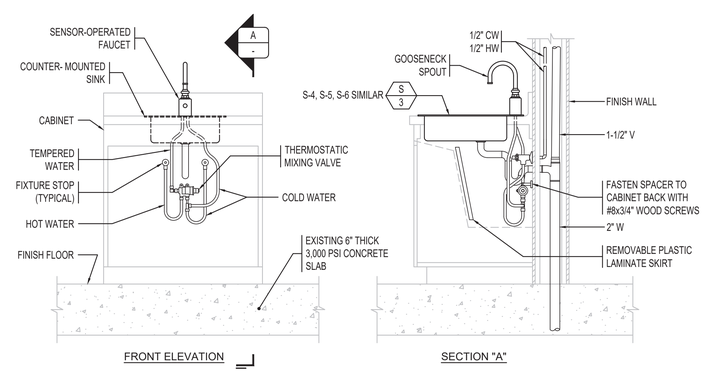

28 SINK - SENSOR-OPERATED FAUCET

NTS

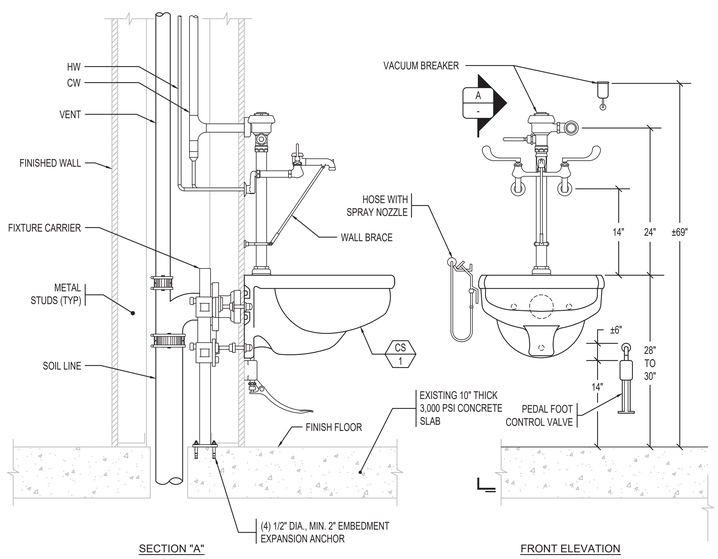

30 WALL HUNG CLINIC SINK

NTS

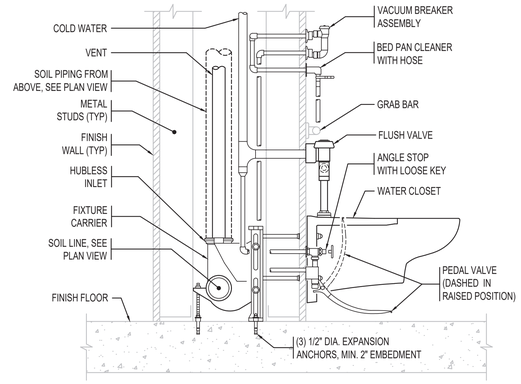

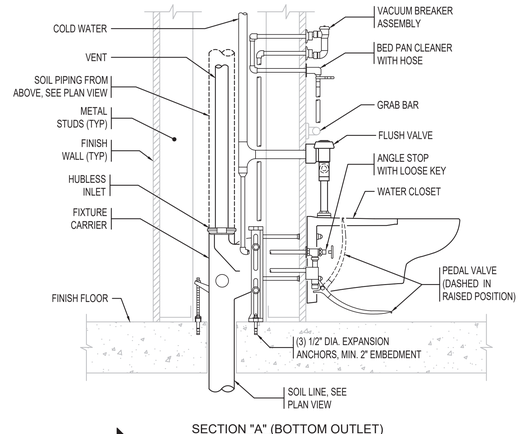

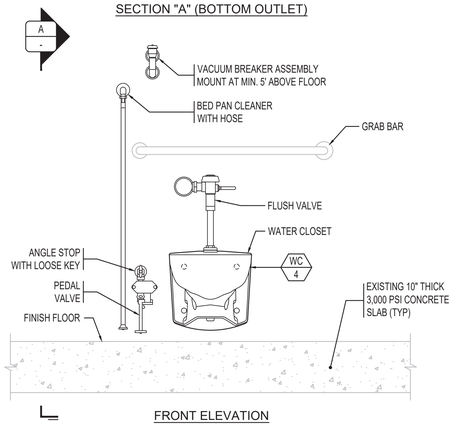

14 WALL HUNG WATER CLOSET WITH BEDPAN WASHER

NTS

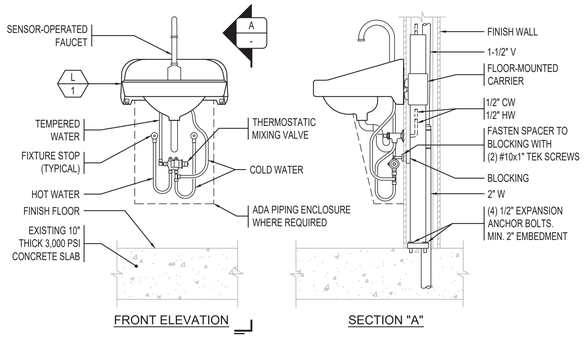

15 LAVATORY - SENSOR-OPERATED FAUCET

NTS

VENTURA COUNTY HEALTH CARE AGENCY

PUBLIC VENTURA COUNTY WORKS

ENGINEERING SERVICES

RASMUSSEN & ASSOCIATES
Architecture
Planning
Interiors
21 S. California Street
Fourth Floor
Ventura, California 93001
(805) 648-1234

JOB No. 2027-00
IRJ ENGINEERS, INC.
MECHANICAL & ELECTRICAL ENGINEERS
4517 MARKET STREET, SUITE 1B VENTURA, CALIFORNIA 93003
(805) 642-2355

FOR PLAN REVIEW ONLY

PROFESSIONAL SEALS

PERMIT APPROVAL STAMP

REVIEWED IN ACCORDANCE WITH THE REQUIREMENTS OF T24, CCR
APPROVED
Department of Health Care Access and Information
FACILITIES DEVELOPMENT DIVISION
9/28/2022, 3:17:57 PM
H202495-56-00
Laura Baldrati

PERMIT NO HCAI #H202495-56-00

NO	REVISION	DATE
1		

PUBLIC WORKS PROJECT MANAGER

CONSULTANT PROJECT MANAGER Jay Lomagno

DRAWN BY	CHECKED BY
CONSULTANT JOB NO A000495	DATE 06/15/2022

PROJECT TITLE AND ADDRESS

VENTURA COUNTY MEDICAL CENTER PEDIATRIC UNIT

300 HILLMONT AVE
VENTURA, CA 93003

COUNTY SPEC NUMBER CP21-04

COUNTY PROJECT NUMBER P6T20009

COUNTY DWG NO SHEET 59 OF 89

SHEET TITLE

PLUMBING DETAILS

SHEET NO P4.1

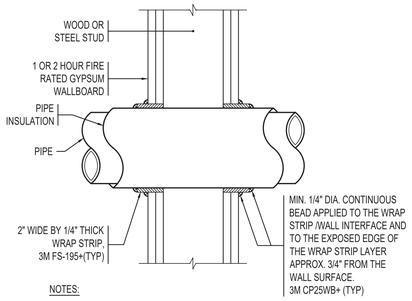

NOTES:

1. THE SPACE BETWEEN THE PENETRATING ITEM AND WALLBOARD SHALL BE PER THE UL LISTING.
2. PIPE INSULATION SHALL BE FIBERGLASS, MIN. 1" THICK, MIN. 3.5 PCF DENSITY, WITH ALL SERVICE JACKET SEALED PER UL LISTING.
3. FOR 12" DIA. (OR SMALLER), SCH. 10 OR HEAVIER) STEEL PIPE. FOR 6" DIA. (OR SMALLER) TYPE L (OR HEAVIER) COPPER TUBING.
4. UL SYSTEM NO. W-L-5001.
5. INSTALLATION SHALL CONFORM TO UL LISTING.

F RATING - 1 OR 2 HR
T RATING - 3/4 HR

32 INSULATED PIPE THRU RATED WALL

NTS

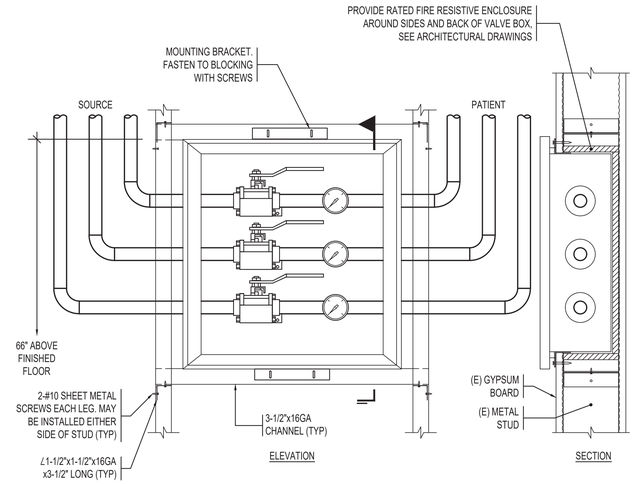

22 ZONE VALVE ASSEMBLY ZV-1

NTS

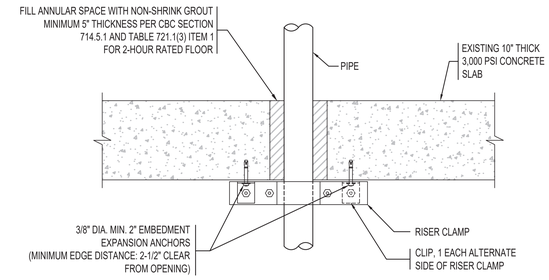

12 PIPE THRU FLOOR

NTS

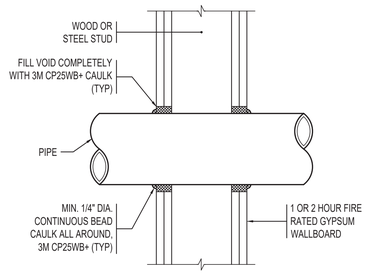

NOTES:

1. THE SPACE BETWEEN THE PENETRATING ITEM AND WALLBOARD SHALL BE PER THE UL LISTING.
2. FOR 24" DIA. (OR SMALLER), SCH. 10 (OR HEAVIER) STEEL PIPE. FOR 6" DIA. (OR SMALLER) TYPE L (OR HEAVIER) COPPER TUBING. FOR 24" DIA. (OR SMALLER) SERVICE WEIGHT (OR HEAVIER) CAST IRON PIPE.
3. UL SYSTEM NO. W-L-1001.
4. INSTALLATION SHALL CONFORM TO UL LISTING.

F RATING - 1 OR 2 HR
T RATING - 0 HR

34 UNINSULATED PIPE THRU RATED WALL

NTS

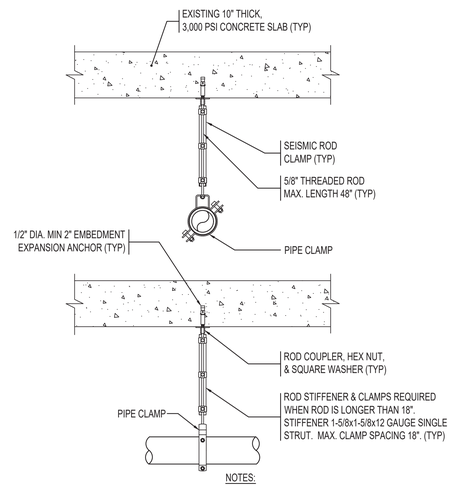

NOTES:

1. SUPPORT PIPE AT EVERY OTHER JOINT UNLESS OVER 4 FEET THEN SUPPORT EACH JOINT. MAXIMUM SPACING FOR GRAVITY SUPPORTS:
   1/2" PIPE = 6 FEET.
   3/4" PIPE = 7 FEET.
   1" PIPE = 8 FEET.
2. SEISMIC BRACING NOT REQUIRED FOR ≤ 2" DIAMETER COPPER PIPE.

24 PIPE HANGER

NTS

SUPPORT CAST IRON PIPE AT EVERY OTHER JOINT UNLESS OVER 4 FEET THEN SUPPORT EACH JOINT. MAXIMUM SPACING FOR GRAVITY SUPPORTS IS 8-FEET. MAXIMUM SPACING FOR TRANS. BRACING IS 21-FEET. MAXIMUM SPACING FOR LONG. BRACING IS 40 FEET.

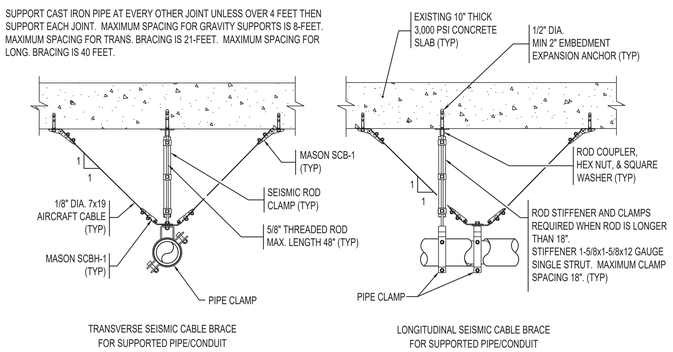

14 PIPE HANGER

NTS

NOTE: BRACING NOT REQUIRED WHEN DISTANCE BETWEEN TOP OF PIPE AND SUPPORTING STRUCTURE IS 12" OR LESS AND HANGER RODS ARE 3/8"Ø OR 1/2"Ø WITH SWIVEL CONNECTIONS. MAXIMUM PIPE SIZE IS 4" AND MAXIMUM SUPPORTED WEIGHT FOR THIS DETAIL IS 110 LBS.

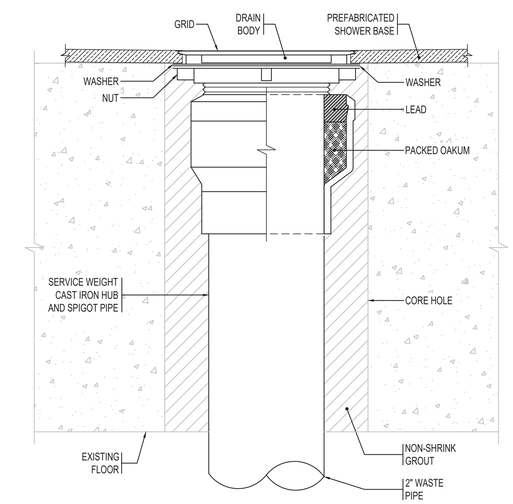

25 DRAIN INSTALLATION FOR PREFABRICATED SHOWERS

NTS

SUPPORT CAST IRON PIPE AT EVERY OTHER JOINT UNLESS OVER 4 FEET THEN SUPPORT EACH JOINT. MAXIMUM SPACING FOR GRAVITY SUPPORTS IS 8-FEET. MAXIMUM SPACING FOR TRANS. BRACING IS 10-FEET. MAXIMUM SPACING FOR LONG. BRACING IS 20 FEET.

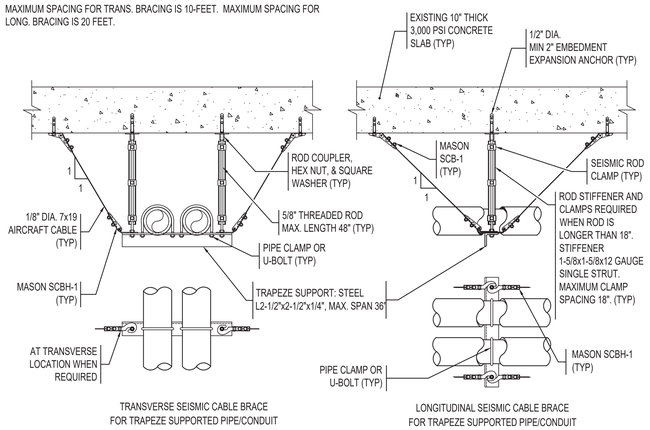

NOTE: BRACING NOT REQUIRED WHEN DISTANCE BETWEEN TOP OF TRAPEZE AND SUPPORTING STRUCTURE IS 12" OR LESS, HANGER RODS ARE 3/8"Ø OR 1/2"Ø WITH SWIVEL CONNECTIONS. ALL PIPES ARE SIZE 2" OR SMALLER, AND WEIGHT SUPPORTED BY A SINGLE TRAPEZE IS 100 LBS OR LESS.

15 PIPE TRAPEZE

NTS

VENTURA COUNTY HEALTH CARE AGENCY

PUBLIC WORKS VENTURA COUNTY

ENGINEERING SERVICES

RASMUSSEN & ASSOCIATES
Architecture
Planning
Interiors
21 S. California Street
Fourth Floor
Ventura, California 93001
(805) 648-1234

IRJ ENGINEERS, INC.
MECHANICAL & ELECTRICAL ENGINEERS
4517 MARKET STREET, SUITE 1B VENTURA, CALIFORNIA 93003
(805) 642-2355

FOR PLAN REVIEW ONLY

PROFESSIONAL SEALS

PERMIT APPROVAL STAMP

REVIEWED IN ACCORDANCE WITH THE REQUIREMENTS OF T24, CCR
APPROVED
Department of Health Care Access and Information
FACILITIES DEVELOPMENT DIVISION
9/28/2022, 3:17:57 PM
H202495-56-00
Laura Baldrati

PERMIT NO HCAI #H202495-56-00

NO	REVISION	DATE
△		

PUBLIC WORKS PROJECT MANAGER

CONSULTANT PROJECT MANAGER
Jay Lomagno

DRAWN BY	CHECKED BY

CONSULTANT JOB NO	DATE
A000495	06/15/2022

PROJECT TITLE AND ADDRESS

VENTURA COUNTY MEDICAL CENTER PEDIATRIC UNIT

300 HILLMONT AVE
VENTURA, CA 93003

COUNTY SPEC NUMBER
CP21-04

COUNTY PROJECT NUMBER
P6T20009

COUNTY DWG NO — SHEET 60 OF 89

SHEET TITLE
PLUMBING DETAILS

SHEET NO
P4.2

DIVISION 23 00 00
PLUMBING SPECIFICATIONS

I. GENERAL

1.01 The scope of work consists of complete and operating plumbing and fire protection systems for the remodel area including:
A. Furnish and install plumbing system components including all piping, fixtures, trim, appurtenances, and supports as required for an operating system. Relocate equipment and components as required.
B. Furnish and install fire protection system components including all piping, sprinklers, valves, monitoring devices, appurtenances, and supports as required for an operating system. Relocate components as required.
C. Remove abandoned supports and piping.
D. Verify operation and performance of systems. Test all systems for leaks.
E. Provide connections to Agency furnished equipment.

1.02 Comply with the current applicable codes and regulations including, but not limited to, the 2019 California Building and Plumbing Codes.

1.03 Perform work in accordance with the referenced standards:
A. American National Standards Institute (ANSI).
B. American Society of Mechanical Engineers (ASME).
C. American Society for Testing Materials (ASTM).
D. American Welding Society (AWS).
E. Manufacturer's Standardization Society (MSS).
F. National Electrical Manufacturers Association (NEMA).
G. National Fire Protection Association (NFPA).
H. National Sanitation Foundation - International (NSF-International).
I. Underwriters Laboratories, Inc. (UL).

1.04 All equipment and devices furnished as part of this work shall be listed, labeled, or certified for the intended use by a Nationally Recognized Testing Laboratory as recognized by the United States Department of Labor, Occupational Safety, and Health Administration.

1.05 Coordinate working hours with the Agency to minimize the impact the construction will have on the facility's occupants, staff, and operations. Follow phasing instructions and minimize downtime. Provide temporary connections to systems so that completed work can be placed into service and completed areas occupied. Coordinate this work with the activities of the facility maintenance staff.

1.06 Submit complete copies of technical data, product data, shop drawings, schematics, wiring diagrams, and installation and startup instructions for all products and materials that will be used on this project. Submittals shall be searchable pdf files. Scans of paper documents are unacceptable. Submittals shall be marked with specification reference and equipment or device tag number and shall identify specific materials submitted and options selected. Submit evidence that equipment furnished as part of this work is listed, labeled, or certified for the intended use. Submit scaled coordination drawings, minimum scale of 1/4"=1'-0", detailing major elements, components, and systems of plumbing equipment and materials in relationship with other systems, installations, and building components. Coordination drawings shall indicate locations where space is limited for installation or access and where sequencing and coordination of installations are important for the efficient flow of the work.

1.07 Submit operating and maintenance manuals for all equipment, plumbing fixtures, and devices installed as part of this project. Manuals shall be searchable pdf files with appropriate bookmarks.

1.08 The Agency shall obtain the building permit from HCAI. Work shall not commence until a valid building permit has been issued. Additional permits related to this Work shall be obtained by the Contractor.

1.09 Review contract documents and technical specifications for extent of work, phasing conditions, relationship of demolition, and work to be provided. Examine all existing conditions at building site. Verify all dimensions by field measurements. The drawings indicate diagrammatically the general layout of the plumbing systems and the locations of the related equipment and components. Do not fabricate any work using these documents as the only reference.

1.10 Drawings and Specifications are intended to be fully cooperative and to agree. The Contractor shall notify the Engineer at once if any discrepancy or apparent difference is observed. Clarifications of the Drawings and Specifications shall be by the Engineer.

1.11 While work is in progress, except for designated short intervals during which connections are made, continuity of service shall be maintained to all existing systems. Interruption of building services and utilities considered to be critical to the operation of the facility shall be performed only at approved times, during the hours from 12:00 midnight to 4:00 a.m., with a maximum interruption of four hours. Interruption of services and utilities considered to be non-critical may be performed during normal working hours at approved times and durations, unless noted otherwise. Prior to interrupting a service or utility, have adequate materials and labor readily available so that the work can be completed without delay and the service or utility restored within the approved schedule. Include required temporary provisions to maintain services and utilities that cannot be interrupted at any time. Submit request for interruption of service or utility a minimum of seven days prior to the planned interruption.

1.12 Coordinate plumbing equipment and materials installation with other building components. Arrange for chases, slots, and openings in other building components to allow for plumbing installations. Conceal work within finished spaces. Sequence, coordinate, and integrate installations of plumbing materials and equipment for efficient flow of the work.

1.13 Include the cutting and patching of building components to accommodate the installation of plumbing equipment and materials. Patching shall match existing surfaces for materials, finish, and color.

1.14 Where mounting heights are not detailed or dimensioned, arrange plumbing work and overhead installations to provide the maximum clearance possible.

1.15 Install plumbing equipment and systems to facilitate maintenance and repair or replacement of equipment components. Coordinate final locations for rough-ins with field measurements and with the requirements of the actual devices to be connected. Refer to contract documents for rough-in requirements. Coordinate the installation of plumbing materials and equipment with ceiling suspension system, luminaires, and other installations.

1.16 All material and equipment installed for this work shall be new unless indicated otherwise.

1.17 Provide complete and accurate record drawings both during construction and before final acceptance. All costs associated with the preparation of the record documents shall be included under this Work. Obtain at cost, from the Agency, a complete set of applicable full-size prints. Mark prints to indicate revisions to piping and ductwork, size and location, locations of control devices and similar units requiring periodic maintenance or repair, actual equipment locations dimensioned from column lines, actual dimensions of mains and branches of piping systems from column lines, and work included in Change Orders. Locate all cleanouts and indicate dimensions from columns or similar building elements. The Inspector of Record shall approve and sign the record prints. Submit neat and readable copies of these record prints for review and acceptance.

1.18 Deliver products to project properly identified with names, model numbers, types, grades, compliance labels, and similar information needed for distinct identification and adequately packaged and protected to prevent damage during shipment, storage, and handling. Store equipment and materials in an environmentally controlled area at the site, unless off-site storage is authorized in writing. Protect stored equipment and materials from damage. Piping supplied with plastic end caps shall remain capped to prevent entry of debris and moisture. End caps shall be maintained until piping is installed and connected. Valves, fittings, and components for medical gas and vacuum systems shall be shipped to the job site in factory-sealed bags. Storage in factory-sealed bags shall be maintained until the components are installed.

1.19 Field prime and finish paint all exposed work of Division 23 that is not provided with a factory finish, except exposed copper piping and exposed insulation. Painting shall be performed as specified in Division 9.

1.20 Contractor shall visit the job site before submitting a bid to determine the scope of the demolition work, and to become familiar with the existing conditions that affect the work and therefore the bid. Agency shall have first right of refusal of all salvageable materials demolished as part of this work. Contractor shall clean items claimed by the Agency and deliver them to an Agency selected storage location. Such materials not claimed by the Agency shall become the property of the Contractor and shall be removed from the site by the Contractor. Remove all equipment, materials, supports, and appurtenances for all items indicated demolished. Leave the area clean and suitable for the installation of the work. Areas vacated by equipment shall be left in a neat and safe condition. Maintain continuity of equipment, services, and all systems that will remain active. Remove all abandoned piping, ductwork, supports, equipment, and appurtenances, except where removal affects existing equipment and systems that remain. Cap open ends of piping that remains. Perform all work required for relocation and extension of plumbing systems to clear the area of demolition and for the installation of this work. Legally dispose of all demolished materials, equipment, and debris.

1.21 Perform all plumbing tests as required or as directed including tests indicated by the installation instructions provided with the products and materials supplied. Provide all materials, labor, and equipment necessary for performance of these tests. At completion of the work, perform a complete "in-service" operation of all systems installed or modified as part of this work, to demonstrate compliance with the Drawings and Specifications. Replace any work shown to be faulty under test without additional cost.

1.22 Provide services of factory trained technicians for start-up of plumbing equipment and piping systems installed as part of this work. Submit written certification that start-up services have been performed and indicate the name(s) of personnel involved and the date(s) when services were performed.

1.23 Upon completion of the work, perform final cleaning. Clean the area of all debris. Remove shipping and other non-permanent labels. Wipe surfaces of plumbing materials, equipment, and devices clean. Clean all plumbing fixtures to a sanitary condition. Touch up paint on all finished surfaces.

1.24 Provide a one-year material and labor warranty for all work of this project from the date of Agency acceptance. Warranty shall cover leaks, breaks, or failure to perform intended function. Submit written warranty statement. Provide extended warranties as indicated in General Conditions. Products and Materials paragraphs.

II. PRODUCTS AND MATERIALS

2.01 Piping and Fittings
A. Aboveground Cold Water, Tempered Water, Hot Water Supply and Return, Make-up Water, Industrial Cold Water, and Drain: Type L hard drawn seamless copper tubing conforming to ASTM B88-2009. Fittings shall be wrought copper conforming to ANSI/ASME B16.22-2001 (R2010) with lead-free solder joints. Piping, fittings, and solder shall be certified to conform to ANSI/NSF Standard 61. Flux for solder shall be water soluble and conform to ASTM B-813.
B. Aboveground Sanitary Drainage, Plumbing Vent, and Storm Drainage: Hubless cast iron soil pipe conforming to CISPI 301-05 and ASTM A888-04a. Fittings shall be hubless cast iron pipe conforming to CISPI Standard 301-04a and ASTM A888-04a. Couplings shall be heavy-duty stainless steel conforming to CISPI 310-04 and ASTM C1540-04. Hubless coupling gaskets shall conform to ASTM Standard C564-03a. Pipe and fittings shall be marked with the collective trademark of the Cast Iron Soil Pipe Institute and listed by NSF International. Couplings shall be certified by NSF International. Couplings in piping over operating rooms, delivery rooms, cesarean rooms, recovery rooms, nurseries, intensive care units, food preparation centers, food serving facilities, and food storage areas and couplings in piping that requires seismic restraints shall be tested and certified to conform to the performance requirements of Factory Mutual, Approval Standard 1680, Class I, by Factory Mutual Research and conform to ASTM C1540-04, ASTM C564-03a, and IAPMO 7816. Manufacturer: Mission Rubber Company, LLC, Anaco-Husky, or equal.
C. Aboveground Oxygen, Medical Air, Nitrous Oxide, and Vacuum: Type L or K hard drawn seamless medical gas copper tubing conforming to ASTM B819. Tubing shall bear one of the following markings: OXY, MED, OXY/MED, OXY/ACR, or ACR/MED. Fittings shall be capillary type wrought copper conforming to ASME B16.22 or braze-joint fittings complying with ANSI/ASME B16.50. Joints shall be brazed. The brazing alloy shall exhibit a melting temperature in excess of 1,000ºF, comply with ANSI/AWS A5.8, and shall be copper-phosphorus or copper-phosphorus-silver composition. All pipe, fittings, and appurtenances shall be factory cleaned for oxygen service by the manufacturer in accordance with CGA G-4.1 "Cleaning Equipment for Oxygen Service." Each length of tube shall be delivered plugged or capped by the manufacturer and kept sealed until prepared for installation. Fittings, valves, and other components shall be delivered sealed and labeled and kept sealed until prepared for installation.

2.02 Specialties
A. Escutcheons: Chrome plated, stamped steel, split ring escutcheon. Inside diameter shall closely fit outside diameter of pipe or outside diameter of insulation on insulated pipes. Outside diameter shall completely cover the hole in the penetrated surface. Manufacturers: Chicago Specialty Manufacturing Co., Sanitary-Dash Manufacturing Co., or equal.
B. Dielectric Fittings: Electroplated steel or brass nipple with an inert thermoplastic liner and lead free construction. Manufactured in accordance with ASTM F1545 for continuous use at 300 psig and 225°F. Liner shall be NSF/FDA listed. Manufacturers: Perfection Corporation, Precision Plumbing Products, or equal.
C. Dielectric Unions: Unions shall be rated at 250 psig at 150ºF, 600 volts on a dry line with no flash over, and shall be designed to meet the requirements of ANSI B16.39. Manufacturers: Watts Regulator Co., Wilkins, or equal.
D. Unions for Copper Pipe: Cast brass, wrought copper tailpiece, bronze ring nut and thread piece, threaded joint.
E. Unions for Steel Pipe: Malleable iron class 150 for low pressure service and class 250 for medium and high pressure service, hexagonal stock, ball and socket joints, metal to metal bronze seating surfaces, and female threaded ends. Conforming to ASME B16.39.
F. Flanges for Copper Pipe: Class 125, copper alloy, cast flanges, sweat connection, conforming to MSS SP-106. Class 150, copper alloy, cast flanges, sweat or threaded connection, complying with ASME B16.24
G. Flexible Pipe Connectors: Provide braided metal hose with fittings on the ends that match the specific piping system. For copper piping use bronze hose and braid with copper ends. Hose pressure ratings shall conform to ratings for piping systems. Manufacturer: Twin City Hose, Inc., Hyspan Precision Products, Inc., or equal.
H. Access Doors:
1. Non-Rated Wall Access Doors: Door and frame fabricated from 16-gauge galvannealed steel with a prime coat finish. Frame 1" wide. Hinge is pivoting rod style for sizes smaller than 24" and piano style for doors 24" and larger. Latch is screwdriver operated. Manufacturer: Elmdor, Pottorff, or equal.
2. Non-Rated Ceiling Access Doors: Door and frame fabricated from 16-gauge galvannealed steel with a prime coat finish. Frame 1" wide. Hinge is pivoting rod style for sizes smaller than 24" and piano style for doors 24" and larger. Latch is screwdriver operated. Manufacturer: Elmdor, Pottorff, or equal.
3. Fire-Rated Ceiling Access Doors: Frame shall be 16-gauge steel with 1" flange. Door shall be double panel, minimum 20-gauge steel, with continuous piano type hinge, 2" thick insulation in door cavity, and screwdriver operated latch. Finish shall be prime coat suitable for painting. Underwriters Laboratory classification shall be 1-1/2 hours "B" Label conforming to ANSI-UL 108 Standard.

2.03 Valves
A. Ball Valves for Potable Water (2-1/2" and smaller): Silicon bronze alloy construction with three-piece body, blowout-proof stem, full port, lead-free components, and threaded ends. Rated at 600 psi non-shock cold working pressure. Maximum pressure/temperature 100 psi at 300 degrees F. Valves shall be certified to conform to ANSI/NSF Standard 61. Manufacturer: Nibco T-595-Y-LF.
B. Alternate Manufacturers: Milwaukee Valve Co. or Stockham Valves & Fittings as listed in Nibco Inc. figure number comparison chart.

2.04 Meters and Gauges
A. Pressure and Temperature Gauge Fittings: Pete's Plug.
B. Calibrated Balance Valves: Provide calibrated balance valves with adjustment handle, pressure ports, and calibrated scale. Manufacturer: Bell & Gossett, Taco, or equal.

2.05 Supports and Anchors
A. Provide clevis type pipe supports with threaded rods and building attachments for suspended piping. Provide pipe clips where piping is mounted to the structure. Provide riser clamps for piping installed in the vertical position. Hangers, clips, and clamps shall be sized for the piping supported and any installed insulation and/or covering. Hangers, clips, and clamps for copper pipe shall be coated for copper service. Provide trapeze supports for multiple pipes installed along the same route. Provide calcium silicate inserts at supports for insulated piping. Manufacturer: B-line, Powerstrut, Tolco, or equal.
1. Plumbing Piping shall have support spacing in accordance with the California Plumbing Code.
2. Fire Sprinkler Piping shall have support spacing in accordance with NFPA 13.
3. Medical Gas and Vacuum Piping shall have support spacing in accordance with NFPA 99.
B. Provide 12-gauge steel, metal framing channel with epoxy paint for interior installations. Paint cut ends of channel with epoxy paint for interior installations. Provide fittings with epoxy paint for interior installations. Fasteners shall conform to ASTM A307. All fasteners shall be grade-2 or higher and shall be tightened to manufacturer's recommended values. Minimum torque for 3/8" diameter bolts is 19 ft-lbs. Minimum torque for 1/2" diameter bolts is 50 ft-lbs. Manufacturer: B-Line, Power-Strut, or equal.
C. Provide dielectric isolation between piping and supports using formed metal and felt isolators.
D. Expansion Anchors: Concrete expansion type anchors shall be Hilti KWIK Bolt TZ2 Wedge anchors. Masonry expansion type anchors shall be Hilti KWIK Bolt TZ2 Wedge for grout filled masonry. Allowable shear and tension values for each anchor shall comply with the latest ICC-ES Evaluation Report for the specific anchor. Provide anchors with diameter and minimum embedment as required by the loads and as indicated on the drawings. Coordinate expansion anchor specification, embedment, and testing with detail 4 on drawing S-1.10.

2.06 Insulation
A. Pipe Insulation Materials.
1. Fiberglass Pipe Insulation: Provide insulation with all-service jacketing conforming to ASTM C547, Type I, and ASTM C1136, Type I, with conductivity per ASTM C335 and UL labeled Flame Spread Index of 25 or less and Smoke Developed Index of 50 or less per ASTM E84. Insulation minimum density 3.5 pcf. Insulation shall be as follows:
a. Domestic hot water supply and return piping and hot drain piping: Temperature range 105 to 140 degrees F. Mean rating temperature 100 degrees F, conductivity of 0.240 Btu-inch per hour per square foot per degree F.
b. Drain piping conveying hot liquids: Temperature range 105 to 140 degrees F. Mean rating temperature 100 degrees F, conductivity of 0.240 Btu-inch per hour per square foot per degree F.
c. Manufacturer: Owens Corning Insulating Systems, LLC, Johns Manville, or equal.
B. Insulation Accessories: Provide staples, bands, wires, tape, anchors, corner angles, PVC fitting covers and similar accessories as recommended by insulation manufacturer for applications indicated or as specified in III Execution.
C. Insulation Compounds: Provide cements, adhesives, coatings, sealers, mastics, protective finishes, and similar compounds as recommended by insulation manufacturer for applications indicated.

2.07 Fire Sprinkler System
A. Sprinklers: Provide quick response sprinklers of type and style as indicated or required by the application. Unless otherwise indicated, provide sprinklers with nominal 1/2" discharge orifice, for "ordinary" temperature range. Sprinklers shall be concealed style, adjustable to the ceilings finish, rough brass, with painted white cover plate. Submit sample of cover plate color for review. Manufacturer: Automatic Sprinkler Corp of America, ITT Grinnell, Reliable Automatic Sprinkler Co., Inc., Star Sprinkler Corp. or Viking Corp.
B. Pipe: ANSI/ASTM A53, Schedule 40, seamless, black steel pipe, with plain ends.
C. Threaded Fittings: ANSI B16.3, Class 300, malleable iron, standard pattern, for threaded joints. Threads shall conform to ANSI B1.20.1.
D. Welded Fittings: ASTM A234, steel, seamless or welded, for welded joints.
E. Grooved Mechanical Couplings: Couplings shall consist of ductile or malleable iron housing with a synthetic gasket of a central cavity pressure-responsive design. Couplings shall be complete with nuts, bolts, locking pin, locking toggle, or lugs to secure roll-grooved pipe and fittings. Grooved mechanical couplings including gaskets used on dry-pipe systems shall be listed for dry-pipe service. Manufacturer: Stockham or Victaulic Company of America.
F. Grooved Mechanical Fittings: ASTM A536, Grade 65-45-12 ductile iron; ASTM A47 Grade 32510 malleable iron; or ASTM A53, Type F or Type E or S, Grade B fabricated steel fittings with grooves or shoulders designed to accept grooved end couplings. Manufacturer: Stockham or Victaulic Company of America.
G. Sprinkler Cabinet and Wrench: Provide finished steel cabinet, suitable for wall mounting, with hinged cover and space for six spare sprinklers plus sprinkler wrench. Provide a separate cabinet for each style sprinkler on the project. Manufacturer: Same as fire sprinklers.

2.08 Plumbing Fixtures and Appurtenances
A. Plumbing Fixtures: Provide plumbing fixtures as scheduled complete with carriers, supports, and trim, including chrome plated loose key stops, chrome plated p-traps, chrome plated trap arms, and chrome plated tailpieces. Trim shall be Chicago unless indicated otherwise. Carriers shall be J.R. Smith or equal by Zurn.
B. Sinks: Fixture shall be self-rimming, Type 304, 18-gauge, stainless steel with satin finish that complies with ADA requirements. Grid drain shall be Type 304 polished stainless steel, sized to match the sink. Faucet shall be battery operated electronic type with gooseneck, 0.5 gpm vandal-proof non-aerating spray outlet, 6-volt lithium battery, and thermostatic mixing valve. Stops shall be chrome plated brass with loose key. Fixture bowl size and features shall be as indicated in the schedule. Furnish fixture with chrome plated brass p-trap, trap arm and tailpiece. All components contacting potable water shall be lead-free in accordance with the requirements of the State of California. Fixture manufacturer: Elkay, Just, or equal. Trim manufacturer: Chicago.
C. Lavatories: Fixture shall be wall hung, vitreous china., for installation with concealed arms that complies with ADA requirements. Grid drain shall be Type 304 polished stainless steel, sized to match lavatory. Faucet shall be battery operated electronic type with spout, 0.5 gpm vandal-proof non-aerating spray, lithium battery, and thermostatic mixing valve. Stops shall be chrome plated brass with loose key. Fixture bowl size and features shall be as indicated in the schedule. Furnish fixture with chrome plated brass p-trap, trap arm and tailpiece. All components contacting potable water shall be lead-free in accordance with the requirements of the State of California. Fixture manufacturer: American Standard, Kohler, or equal. Trim manufacturer: Chicago. Carrier manufacturer: J.R. Smith, Zurn, or equal.
D. Supplies: Supplies shall be braided 304 Stainless Steel with compression connectors. Internal hose for lavatories and sinks shall be polyvinyl chloride. Internal hose for ice makers shall be Santoprene. Metal nuts and ferrules shall be nickel plated brass alloy. Washers shall be Santoprene. Working pressure shall be 125 psig and working temperature shall be 40 to 150 degrees F. Supplies shall comply with the IAPMO Uniform Plumbing Code, ASME A112.18.6/CSA B125.6, and NSF Standard 61, Section 9. Manufacturer: Fluidmaster, or equal.
E. Below Fixture Piping Covers: Covers shall be single-piece, high-impact, stain-resistant, UV-protected, molded vinyl construction that conceal the piping and appurtenances below the fixtures and protect the users. Covers shall be ADA compliant and meet the requirements for wheelchair accessibility. Vinyl for covers shall contain an antimicrobial additive to resist fungal and bacterial growth. Covers shall be trimmed to fit the specific fixture. Cover fasteners shall be tamperproof. Manufacturer: IPS Corporation or equal.
F. Water Hammer Arresters: Arresters shall be bellows or piston type, sized for fixtures or equipment served. Bellows type shall have stainless steel casing and bellows, nitrogen charged, 250 psi rated, tested and certified in accordance with ASSE 1010. Piston type shall have brass construction, smooth finished internal surfaces; machine finished brass piston, air charged, 250 psi rated, and tested and certified in accordance with ASSE 1010. Manufacturer: Precision Plumbing Products, Jay R. Smith, or equal.
G. Cleanouts: Cleanouts shall have cast iron body with internal threading, cleanout plug, and end connections compatible with installed piping. Cleanout plugs shall be cast-bronze or brass with countersunk head and American Standard tapered threads complying with ANSI B1.20.1. Floor cleanouts shall have an adjustable cast-iron body and frame with a non-slip scored or abrasive non-slip finish nickel bronze top in finished areas or a non-slip scored or abrasive finish cast iron top in unfinished areas. Wall cleanouts shall have a stainless steel cover with screw. Wall cleanouts used for test tees shall include a large spherical opening for hand access, an internal threading for a test plug, a threaded test plug, a raised head plug for the test port connection, and a removable pressure gauge and drain valve assembly for testing.

2.09 Medical Gas and Vacuum Products
A. Outlets and Inlets: Provide medical gas outlets and vacuum inlets as indicated on the drawings. Devices shall be suitable for wall mounting and shall match the connections used by the Agency on the medical gas equipment. Provide vacuum slides where shown, slides shall be compatible with medical gas outlets and vacuum inlets. Outlets and inlets shall comply with NFPA 99. Manufacturer: Amico Corporation, Beacon/Medaes, and Allied Healthcare (Chemetron connectors) to match existing.
B. Zone Valve and Boxes: Provide recessed zone valve and box assembly with valves as indicated on the drawings. Assembly shall consist of a valve box, valve(s) with Type K copper tube extensions, aluminum frame, pull-out flexible plastic cover, and gauge(s). Box shall be 18-gauge steel with painted finish and adjustable steel mounting brackets. Frame shall be anodized aluminum and mounted to the valve box with screws. Valve(s) shall be full port 3-piece bronze body with blow-out proof stem, 600 psi pressure rated, lever handle, chrome plated ball, Teflon seats, and identification bracket. Valves shall include dual gauge ports so that they can be piped left to right or right to left. Gauge(s) shall be 2-inch diameter, dual scale (psig and kPa), 1.5-percent full scale accuracy, range coordinated with service pressure, 1/8-inch connection, copper alloy Bourdon tube, copper alloy movement, steel case, and acrylic window. Zone valve box assemblies shall comply with NFPA 99. Each zone valve box assembly shall be factory-cleaned for oxygen service. Each cleaned assembly shall include protective caps on the copper tube ends and shall be sealed in a protective container. Manufacturer: Amico Corporation, Beacon/Medaes, Allied Healthcare (Chemetron), Tri-Tech Medical, Inc., or equal.
C. Service Valves: Provide service valves consisting of 3-piece, full-port, bronze body with chrome plated brass ball, flexible RPTFE seats, and PTFE packing. Valves shall have blow-out-proof stem. Valves shall be designed for a maximum working pressure of 600 psi WOG or vacuum service to 29" Hg and meet or exceed the requirements of MSS SP-110. Valves shall be provided from the factory with Type K male copper tube extensions. One-quarter turn of the handle shall be required to operate the valve from open to closed position. Valve handles shall include a locking mechanism. Valves shall be furnished with gauge ports on upstream and downstream sides of the valve. The valves shall be inline serviceable. Valves shall be factory-cleaned for oxygen service in conformance with NFPA 99. Each cleaned valve shall include protective caps on the copper tube ends and be sealed in a protective bag to prevent contamination prior to installation. Manufacturer: Milwaukee Valve Co., Amico Corporation, or equal.

III. EXECUTION

3.01 General
A. Install equipment, plumbing fixtures, trim, and appurtenances in strict accordance with manufacturer's directions and applicable code requirements. Exercise care during installation and avoid damaging finished surfaces of equipment, plumbing fixtures, trim, and appurtenances. Make connections using proper tools and do not leave marks on visible surfaces.
B. Install work uniform, level, and plumb in relation to lines of building. Do not install any diagonal or otherwise irregular work unless so indicated on Drawings or approved by the Agency.

3.02 General Piping Installation
A. Install pipe, tube, fittings, fixtures, and equipment in accordance with recognized industry practices, which will achieve permanently leakproof systems, capable of performing each indicated service without failure. Install each run with minimum joints and couplings. Align piping accurately at connections, within 1/16" misalignment tolerance. Use fittings for all changes in direction and all branch connections
B. Install piping at slopes required by code and as required for operation of the piping system.
C. Provide unions or flanges adjacent to each valve, at connections to each piece of equipment, at components that require removal for maintenance, and elsewhere as indicated.
D. Threaded joints shall be made with pipe joint compound. Comply with ANSI/ASME B1.20.1 for piping threading.
E. Solder and brazed joints shall be made with high temperature compounds. Clean surfaces to be joined of all oil, grease, and oxides. Ream all piping free of burrs. Clean socket of fitting and end of pipe thoroughly. After cleaning and before assembly, apply flux to joint surfaces and spread evenly. Brazing procedures shall conform to AWS "Brazing Manual".
F. Provide manual drains at low points in piping systems. Manual drain shall consist of a 3/4" ball valve, hose thread outlet, cap, and chain.
G. Provide flexible connectors at connections to equipment.
H. Clean exterior of piping systems and prepare for application of specified coatings. Flush piping for plumbing systems with clean water before proceeding with testing.
I. Inspect each run of each system for completion of joints, supports, and accessory items. Inspect pressure piping in accordance with procedures of ANSI B31.9.
J. Test each plumbing piping system in accordance with the requirements of the California Plumbing Code. Provide temporary equipment for testing including pump and gauges. A test fails when there is a visible leak, a drop in pressure, or a decrease in water level. Test duration shall be a minimum of two hours. Repair leaks in piping system using specified materials. Stop leak and other temporary methods shall not be used. Retest the system until the test is passed. Drain test water upon completion of successful test.
K. During installation, provide caps covering all open ends of pipe until final connections are made to equipment and fixtures. Caps shall be tight fitting plastic and installed to keep the interior of the piping system free from contamination.
L. Dissimilar piping materials shall be isolated with dielectric fittings or unions.
M. Install escutcheons at each location where a pipe penetrates a finished surface.
N. Where pipes pass through fire rated walls, partitions, ceilings, or floors, the fire rated integrity shall be maintained. Provide firestopping as detailed and specified.
O. Provide access doors where valves, trap primers, water hammer arrestors, and other devices that require maintenance are installed behind finished surfaces of walls and inaccessible ceilings.

3.03 Supports and Anchors
A. Supports for piping shall comply with the California Plumbing Code and other applicable codes. Support piping at each change in direction, at the bottom of risers, at drops, at connection to fixtures or equipment, and wherever necessary to maintain alignment and to prevent sagging, bending, or vibrating. Provide calcium silicate inserts at supports for insulated piping. Insert thickness shall match insulation thickness. Dielectrically isolate piping from supports fabricated from dissimilar metals.
B. Provide seismic bracing for all piping, as required by the California Building Code.
C. Support piping directly from the building structure. Attach pipe supports to structure according to the seismic restraint data by the manufacturer. Provide anchors as required.
D. Existing piping shall be supported from the structure in compliance with this specification and with the seismic requirements of the California Building Code when it is exposed as part of this work. Existing piping include those items that are not affected directly by the work of this project.

3.04 Insulation
A. General Installation: Clean and dry all surfaces to be insulated prior to installing insulation.
B. Piping Insulation:
1. Insulate domestic hot water supply and return piping and hot drain piping with:
a. Fiberglass Pipe Insulation:

Thickness	Pipe Size
1.0"	0" through 3/4"
1.5"	1" through 2-1/2"

2. Omit insulation on unions and flanges for piping carrying domestic hot water.
3. Cover valves, fittings, and similar items in each piping system with equivalent thickness and composition of insulation as applied to adjoining pipe run. Install factory molded, precut or job fabricated mitered units (at Installer's option) except where specific form or type is indicated.
4. Provide all piping insulation with all service jacket, self sealing lap, and PVC fittings covers. Vapor barrier shall be continuous. Seal all raw edges of insulation.
5. Extend piping insulation without interruption through walls, floors, and similar barriers except where otherwise indicated.
6. Insulation of pipes through rated walls shall conform to requirements for UL listed assembly number.
7. Patch existing insulation at points of connection for this work with materials and methods that match the existing installation. Patching shall provide continuous insulation and vapor barrier between existing installation and this work.
8. Repair insulation that is damaged by this work. Repair of insulation shall be performed with materials and methods that match the existing installation.

3.05 Fire Sprinkler System Installation
A. Installer shall possess a valid C-16 license from the State of California. Fire sprinkler fitters shall be certified by the CAL FIRE - Office of the State Fire Marshal. Apprentices and trainees shall be registered with the CAL FIRE - Office of the State Fire Marshal.
B. Install Schedule 40 steel pipe with threaded joints and fittings for 2" and smaller and with welded joints for 2-1/2" and larger.
C. Locations and Arrangements: Drawings indicate the general location and arrangement of piping systems. So far as practical, install piping as indicated.
D. Install sprinkler piping in accordance with NFPA 13, 2016 edition. Provide for system drainage.
E. Use approved fittings to make all changes in direction, branch takeoffs from mains, and reductions in pipe sizes. Install unions in pipes 2" and smaller, adjacent to each valve. Unions are not required on flanged devices or in piping installations using grooved mechanical couplings. Install flanges or flange adapters on valves, apparatus, and equipment having connections 2-1/2" and larger.
F. Hangers and Supports: Comply with the requirements of NFPA 13, 2016 edition. Hanger and support spacing and locations for piping joined with grooved mechanical couplings shall be in accordance with the grooved mechanical couplings manufacturer's written instructions for rigid systems. Provide protection from damage where subject to earthquake in accordance with NFPA 13, 2016 edition.
G. Install sprinkler centered in the ceiling tile modules for lay-in ceilings and centered evenly in non lay-in ceilings. Provide concealed sprinklers for all finished ceiling locations. Install concealed sprinklers with cover plates tight to ceiling and with clearance as required by manufacturer.
H. The installation of the fire sprinkler system shall not be started until complete plans and specifications, including water supply information, have been approved by HCAI. At various stages and upon completion, the system shall be tested in the presence of the Inspector of Record and Enforcing Agency. Fire sprinkler shop drawings and calculations shall be prepared by the Contractor and shall be stamped and signed by a mechanical engineer registered in the State of California. Submit these documents for review.
I. Submit contractor's material and test certificates for aboveground and underground piping per NFPA 13, 2016 edition, as required for this scope of work.

3.06 Plumbing Fixture Installation
A. Install plumbing fixtures in accordance with the manufacturer's installation instructions. Caulk around fixture at interface with finished surface of wall or floor. Fasten fixtures to wall, floor, or carrier at concealed locations with stainless steel hardware. Fasten fixtures to wall, floor, or carrier at visible locations with chrome plated hardware. Provide shutoff valves on supply connections to water hammer arrestors. Adjust plumbing fixtures and trim to provide for quiet operation during use and to prevent water from splashing out of the fixture.

3.07 Medical Gas and Vacuum Installation
A. Installation of medical gas and vacuum piping and appurtenances shall comply with NFPA 99, 2018 edition. Ream all piping free of burrs. When brazing, joints shall be continuously purged with oil-free, dry nitrogen NF. All tools used on medical gas and vacuum systems shall be free of grease, oil, or other lubricant not suitable for oxygen service.
B. Installers shall be qualified as required by NFPA 99. Submit installer qualifications indicating that installers are certified in accordance with ASSE 6010.
C. Brazing procedures and brazer performance shall be qualified in accordance with ASME Section IX or AWS B2.2. Submit Brazing Procedure Specification and Brazing Procedure Qualification Record. Submit the names of brazer(s) qualified for the brazing procedure specification used.
D. Execute Installer-Performed Tests as required by NFPA 99. Submit results of tests

3.08 Labeling
A. General: Install labels for all systems and equipment installed as part of this work. Install labels upon completion of installation. Label text shall match drawing designation or shall have designation as directed by the Engineer. Comply with ANSI/ASME A13.1 for lettering size, length of color field, colors, and viewing angles of identification of piping systems. Comply with ANSI Z535.1 for color codes used on accident prevention signs, labels, and tags. Submit product data for each type of label.
B. Aboveground Piping: Label aboveground piping with plastic pipe labels at 20-foot intervals along runs, at each valve, at each tee, at least once in every story traversed by risers, at each side of floor or wall penetrations, and at least once in or above every single room. Pipe label shall indicate fluid carried in pipe and direction of flow.
C. Valves: Label valves with brass valve tags fastened to the valve with brass chain. Valve tag shall indicate valve number and fluid carried in pipe.
D. Valve Schedule: Submit typewritten valve schedule that indicates valve number, piping system, valve type, valve size, location, and duty.
E. Access Doors: Label duct access doors with stenciled signs indicating requirement for access. Label access doors in finished surfaces with engraved plastic tag with 1/8" high lettering. Fasten tag to door with stainless steel screws.
F. Equipment: Label each piece of equipment. Equipment label shall be engraved plastic tag with 1/4-inch-high lettering, fastened to the equipment with stainless steel screws. Label text shall match drawing designation for equipment or shall have designation as directed by the Engineer.

3.09 Flushing Potable Water Systems
A. Thoroughly flush all portions of the potable water systems with potable water prior to testing and/or disinfecting. Minimum flushing velocity shall be 3 feet per second. Clean all strainers. Flushing shall continue until all entrained dirt and debris have been removed from the piping and flux has been dissolved. Verify that clean water is discharged from each outlet. Continue flushing if dirt, debris, or discoloration of the water is observed.

3.10 Disinfecting Potable Water Systems
A. After thorough flushing has been performed and cleanliness of delivered water confirmed, proceed with the disinfection of the potable water systems. Disinfection work shall be performed in accordance with AWWA C651 with a chlorine content of 50 ppm. The chlorine and water solution shall remain in the piping systems for 24 hours. Upon completion of chlorination cycle, the piping shall be flushed with potable water to remove the disinfection chlorine to a level acceptable to the Authority Having Jurisdiction. During this flushing period, open and close all valves and faucets a minimum of three times.

3.11 Testing Potable Water Systems
A. Upon completion of potable water systems disinfecting, and after flushing has reduced the chlorine to an acceptable level, test all water outlets and confirm that the water delivered is potable. Tests shall include every sink, lavatory, drinking fountain, and other fixture, installed, relocated, or existing, that is served by piping installed or modified by this project and where water can be consumed. Draw a sample from each fixture, label each sample, and test for potability. Testing shall be performed by a laboratory approved for potability testing. Report results of testing by listing the results for each fixture tested. Submit report for review and acceptance. Should the tests indicate that potable water is not being delivered by the systems to each outlet then repeat the potable water systems disinfecting procedure and re-test.

3.12 Medical Gas and Vacuum Testing
A. Test and certify the medical gas and vacuum systems upon completion of installation. Testing shall be in accordance with NFPA 99, 2018 edition, System Verification. Medical gas and vacuum system testing shall be performed by a qualified testing company that is independent from the installer of the system. Submit name and qualifications of testing company for review and acceptance. Upon completion of testing, submit report containing test results for review and acceptance. Report shall be a searchable pdf file. Scans of paper documents are unacceptable. Testing company shall provide written certification that the systems are safe and ready for use for patient care.

End of Division 23 00 00

VENTURA COUNTY HEALTH CARE AGENCY

PUBLIC VENTURA COUNTY WORKS

ENGINEERING SERVICES

RASMUSSEN & ASSOCIATES
Architecture
Planning
Interiors
21 S. California Street
Fourth Floor
Ventura, California 93001
(805) 648-1234

JOB No. 2027-00
IRJ ENGINEERS, INC.
MECHANICAL & ELECTRICAL ENGINEERS
4517 MARKET STREET, SUITE 1B VENTURA, CALIFORNIA 93003
(805) 642-2355

FOR PLAN REVIEW ONLY

PROFESSIONAL SEALS

LICENSED ARCHITECT JAY LOMAGNO C-20801 REN. 12-31-23 STATE OF CALIFORNIA

REGISTERED PROFESSIONAL ENGINEER STEVEN F. ROMOFSKY No. 23191 Exp. 09/22 MECHANICAL STATE OF CALIFORNIA

PERMIT APPROVAL STAMP

REVIEWED IN ACCORDANCE WITH THE REQUIREMENTS OF T24, CCR
APPROVED
Department of Health Care Access and Information
FACILITIES DEVELOPMENT DIVISION
9/28/2022, 3:17:57 PM
H202495-56-00
Laura Baldrati

PERMIT NO HCAI #H202495-56-00

NO	REVISION	DATE
△		

PUBLIC WORKS PROJECT MANAGER

CONSULTANT PROJECT MANAGER
Jay Lomagno

DRAWN BY | CHECKED BY

CONSULTANT JOB NO A000495 | DATE 06/15/2022

PROJECT TITLE AND ADDRESS

VENTURA COUNTY MEDICAL CENTER PEDIATRIC UNIT

300 HILLMONT AVE
VENTURA, CA 93003

COUNTY SPEC NUMBER CP21-04

COUNTY PROJECT NUMBER P6T20009

COUNTY DWG NO | SHEET 61 OF 89

SHEET TITLE
PLUMBING SPECIFICATIONS

SHEET NO
P5.1

1. PRIOR TO BIDDING, CONTRACTOR SHALL DETERMINE CEILING CONSTRUCTION AND MOUNTING REQUIREMENTS FOR EACH LUMINAIRE AT EACH LOCATION, INCLUDING THOSE LUMINAIRES WHERE CEILING TYPE IS INDICATED.
2. SEE DESCRIPTION.
3. SEE SPECIFICATIONS FOR ADDITIONAL REQUIREMENTS.
4. CATALOG NUMBER AND DESCRIPTIONS SHALL BE VERIFIED BY CONTRACTOR PRIOR TO SUBMISSION OF SHOP DRAWINGS. ANY CONFLICTS SHALL BE BROUGHT TO THE ATTENTION OF THE ARCHITECT.
5. WHERE 4' OR 8' LUMINAIRES ARE INSTALLED ADJACENT TO EACH OTHER, THEY SHALL COMBINED IN A TOTAL RUN LENGTH FOR THE ADJACENT LUMINAIRES. PROVIDE FACTORY DRAWINGS OF EACH RUN LENGTH AS PART OF THE LUMINAIRE SUBMITTAL.

TYPE	MANUFACTURER	CATALOG NUMBER (1)(2)(3)(4)	DESCRIPTION (1)(3)(4)(5)	LED DRIVER LUMENS	LED DRIVER QUAN	INPUT WATTS (VA)	MOUNTING (WEIGHT - LBS.)
A	MARK ARCHITECTURAL LIGHTING OR EQUAL NO KNOWN EQUAL	S2LWID-LLP-MSL8-80CRI-35K-600LMF-180CRI-I35K-I600LMF-AS-MIN1-DCT-MVOLT-WHT-NLTAIR2	277 VOLT DIRECT/INDIRECT WALL MOUNTED 8' LONG LUMINAIRE. NOMINAL 2.5" X 4.375" EXTRUDED ALUMINUM HOUSING. PROVIDE WITH FORMED STEEL HIGH REFLECTANCE WHITE REFLECTOR, EXTRUDED ACRYLIC LENS, 3500K COLOR TEMPERATURE, 80CRI. 600 LUMENS/FT DIRECT, 600 LUMENS/FT INDIRECT. INDIRECT LIGHTING SHALL BE ASSYMETRIC. PROVIDE CONSTANT CURRENT DIMMING TO 1%, INDEPENDENT DIRECT AND INDIRECT SWITCHING, WHITE GLOSS FINISH, AND WIRELESS DIMMING. LUMINAIRE SHALL BE RATED FOR THROUGH WIRING WHEN IN THE SAME ROW. PROGRAM THE WIRELESS DIMMING ANTENNA WITH THE RESPECTIVE DIMMING SWITCH.	DIRECT 4800 INDIRECT 4800	1 1	34.2 (36) 34.2 (36)	SURFACE WALL (16 LBS)
A1	MARK ARCHITECTURAL LIGHTING OR EQUAL NO KNOWN EQUAL	S2LWID-LLP-MSL4-80CRI-35K-600LMF-180CRI-I35K-I600LMF-AS-MIN1-DCT-MVOLT-WHT-NLTAIR2	SAME AS TYPE A EXCEPT 4' LONG LUMINAIRE.	DIRECT 1600 INDIRECT 2400	1 1	17.1 (18) 17.1 (18)	SURFACE WALL (8 LBS)
A2	MARK ARCHITECTURAL LIGHTING OR EQUAL NO KNOWN EQUAL	S2LWID-LLP-MSL8-80CRI-35K-600LMF-180CRI-I35K-I600LMF-AS-DCT-MVOLT- WHT	SAME AS TYPE A EXCEPT NO DIMMING AND NO WIRELESS.	DIRECT 3200 INDIRECT 4800	1 1	34.2 (36) 34.2 (36)	SURFACE WALL (16 LBS)
A3	MARK ARCHITECTURAL LIGHTING OR EQUAL NO KNOWN EQUAL	S2LWID-LLP-MSL4-80CRI-35K-600LMF-180CRI-I35K-I600LMF-AS-DCT-MVOLT- WHT	SAME AS TYPE A1 EXCEPT NO DIMMING AND NO WIRELESS.	DIRECT 1600 INDIRECT 2400	1 1	17.1 (18) 17.1 (18)	SURFACE WALL (8 LBS)
B	LITHONIA LIGHTING OR EQUAL NO KNOWN EQUAL	ENVX-2X2-HRG-4800LM-80CRI-35K-MIN1-ZT-MVOLT-LATC	277 VOLT, LAY-IN , 2'X2' FLAT PANEL LED TROFFER WITH 4800 LUMEN OUTPUT, 3500K COLOR TEMPERATURE, 80CRI, AND INTEGRAL T-BAR CLIPS. PROVIDE CONSTANT CURRENT DIMMING TO 1%.	4800	1	45 (50)	RECESSED CEILING (15 LBS)
C	GOTHAM OR EQUAL	EVO4-35K/20-DFF-SOL-MVOLT-E10	277 VOLT, 4" NOMINAL DIAMETER LED RECESSED PATIENT ROOM DOWNLIGHT WITH 2000 LUMEN OUTPUT, 3500K COLOR TEMPERATURE, TEXTURED ROUND FLUSH LENS, WHITE REFLECTOR & FLANGE, HIGH CRI (90+) AND MEDIUM DISTRIBUTION.	2000	1	19.5 (22)	RECESSED CEILING (8 LBS)
C1	GOTHAM OR EQUAL	EVO4-35K/15-DFF-SOL-MVOLT-E10	SAME AS TYPE C1, EXCEPT RECESSED SHOWER LIGHT WITH 1500 LUMEN OUTPUT AND 80 CRI.	1500	1	13.7 (15)	RECESSED CEILING (8 LBS)
D	LITHONIA LIGHTING OR EQUAL NO KNOWN EQUAL	EPANL-2X2-3400LM-80CRI-35K-MIN1-MVOLT	277 VOLT, LAY-IN , 2'X2' FLAT PANEL LED TROFFER, WITH ALUMINUM FRAME, SATIN WHITE LENS, INTEGRAL T-BAR CLIPS, HIGH EFFICIENCY LED DRIVER, CSA LISTED. PROVIDE CONSTANT CURRENT DIMMING TO 1%.	3400	1	31 (35)	RECESSED CEILING (7.4LBS)
D1	LITHONIA LIGHTING OR EQUAL NO KNOWN EQUAL	EPANL-2X2-3400LM-80CRI-35K-MIN1-DGA22-MVOLT	SAME AS TYPE D EXCEPT WITH DRYWALL MOUNTING ADAPTER	3400	1	31 (35)	RECESSED CEILING (7.4LBS)
E	AMICO OR EQUAL	L-SEC-4-277-A-LED35-90-G-IB	277 VOLT, LAY-IN , 2'X4' PATIENT ROOM LED TROFFER WITH AMBIENT (11,649 LUMENS), EXAM (5,820 LUMENS), AND READING LIGHTS (2X400 LUMENS). HOUSING SHALL BE 18GA CRS ONE PIECE SEAM WELDED. PROVIDE WITH ACRYLIC LENS, WHITE POWDER COAT FINISH, AND CLEAR ACRYLIC INGRESS BARRIER. DOOR FRAME SHALL BE SECURED TO HOUSING, AND SEALED TO THE HOUSING WITH A CLOSED CELL NEOPRENE GASKET. PROVIDE WITH 0-10 DIMMING, 3500K LAMP COLOR, AND 90CRI.	A=11,640 E=5,820 R=2X400	4	157 (170)	RECESSED CEILING (60LBS)
E1	AMICO OR EQUAL	L-SEC-4-277-A-LED35-90-F-IB	SAME AS TYPE E EXCEPT WITH DRYWALL MOUNTING ADAPTER	A=11,640 E=5,820 R=2X400	4	157 (170)	RECESSED CEILING (60LBS)
F	EDGE LIGHTING OR EQUAL NO KNOWN EQUAL	PLAZA-L-LED-35K/99	277 VOLT, WALL MOUNTED RECTANGULAR MIRROR WITH LED LAMPS AND A FROSTED GLASS DIFFUSER. PROVIDE WITH SEPARATE PAINTED STEEL MOUNTING PLATE. OVERALL DIMENSIONS SHALL BE APPROXIMATELY 27.5"W X 40"H X 2"D. PROVIDE WITH NOMINAL 1990 LUMEN OUTPUT AND 35K COLOR TEMPERATURE. CRI SHALL BE 90+.	1990	1	115 (120)	SURFACE WALL (53LBS)
G	COOPER LIGHTING MCGRAW-EDISON OR EQUAL	ISS-SA1-A-735-U-SL4-WH-BPC	277 VOLT, LED QUARTER SPHERE LUMINARIE WITH DIE-CAST ALUMINUM HOUSING, (1) LED LIGHT SQUARE, 350MA DRIVE CURRENT, 3500K COLOR TEMPERATURE AND NOMINAL 5600 LUMEN OUTPUT, TYPE IV DISTRIBUTION, BUTTON PHOTOCELL, REMOVABLE HINGED DOOR FRAME, AND WHITE POLYESTER POWDER COAT FINISH. MOUNT TO FLUSH WALL OUTLET BOX. NOMINAL HOUSING SIZE SHALL BE 16.5"W X 9"H X 9"D.	5600	1	45 (48)	SURFACE WALL (18.5LBS)
H	LITHONIA LIGHTING OR EQUAL	HPW324-MVOLT-LED35-1U2D-FW	277 VOLT, 24"L X 6.85"D X 4.22"H LED WALL BRACKET, WITH 1 ROW OF LEDS FOR UPLIGHT AND 2 ROWS OF LEDS FOR DOWNLIGHT, EXTRUDED ALUMINUM HOUSING, HIGH IMPACT ACRYLIC LENSES ON UP AND DOWNLIGHTS, 4100 LUMEN OUTPUT, 3500K COLOR TEMPERATURE, 80CRI, MULTIVOLT LED DRIVER, NRTL LISTED.	4000	1	41 (46)	SURFACE WALL (10.5LBS)
I	LITHONIA LIGHTING OR EQUAL	LE-S-W-1-G-SD	277 VOLT SINGLE FACE LED EXIT LIGHT WITH GREEN LETTER COLORS, DIE- CAST ALUMINIUM HOUSING, UNIVERSAL CHEVRON KNOCKOUTS, AND HINGED FACEPLATE. UNIT SHALL BE CAPABLE OF BEING TOP, END, OR BACK MOUNTED.	NA	1	1.3 (2)	SURFACE CEILING (4.5LBS)
I1	LITHONIA LIGHTING OR EQUAL	LE-S-W-2-G-SD	SAME AS TYPE I EXCEPT DOUBLE FACE.	NA	1	1.3 (2)	SURFACE CEILING (4.5LBS)

40 LUMINAIRE SCHEDULE

X — DESIGNATION FOR OCPD OR DISCONNECTION EQUIPMENT BY CIRCUIT NUMBER OR LETTER. M=MAIN, B=BRANCH CIRCUIT DEVICE, F=FEEDER, T=TAP.

AF AT 3P (B) — MOLDED CASE CIRCUIT BREAKER. AF=FRAME SIZE, AT=TRIP RATING, P=NUMBER OF POLES, A=AMP RATING.

GFP — GROUND FAULT PROTECTION

ST — 120 VOLT SHUNT TRIP OPERATOR.

AS 3P AF (B) — FUSED SWITCH WITH RATINGS AS INDICATED.

SAFETY SWITCH WITH RATINGS AS INDICATED.

T KVA — TRANSFORMER WITH PRIMARY AND SECONDARY VOLTAGES, PHASES, AND KVA RATING AS INDICATED.

MCP A 3P 1 (B) — COMBINATION MAGNETIC MOTOR STARTER AND OVERCURRENT PROTECTION DEVICE WITH OVERLOADS. RATINGS AS INDICATED. MCP=MOTOR CIRCUIT PROTECTOR, CB=CIRCUIT BREAKER.

MOTOR WITH HORSEPOWER RATING AS INDICATED.

A 3P (B) — ADJUSTABLE SPEED DRIVE. FURNISHED AND INSTALLED UNDER ANOTHER DIVISION. ELECTRICAL SHALL CONNECT.

AM — AMMETER.

SPLICE POINT.

DOTTED LINE INDICATES EQUIPMENT TO BE REMOVED UON.

28 SINGLE LINE DIAGRAM SYMBOL LIST

PIPES, DUCTS, AND CONDUITS SHALL BE SUPPORTED AND BRACED PER OSHPD PRE-APPROVAL OF MANUFACTURER'S CERTIFICATION NO. OPM-0043-13 'THE MASON INDUSTRIES INC. SEISMIC RESTRAINT COMPONENTS FOR SUSPENDED UTILITIES' OR OPM-0295-13 UNISTRUT SEISMIC BRACING SOLUTIONS.' A COPY OF THE OSHPD PRE-APPROVED DOCUMENTS SHALL BE AT THE JOB SITE AT ALL TIMES. INSTALLATION OF THIS EQUIPMENT MUST BE DONE IN STRICT ACCORDANCE WITH THE PRE-APPROVED DOCUMENTS.

LAYOUT DRAWINGS, SHOWING THE BRACING/SUPPORT LOCATIONS AND REFERENCES TO DETAILS FROM THE RELEVANT OSHPD PRE-APPROVALS FOR PIPING/DUCTS/CONDUITS EXCEPT FIRE SPRINKLERS, SHALL BE SUBMITTED FOR USE BY THE IOR AND OFFICE FIELD STAFF. THE LAYOUT DRAWINGS SHALL BE REVIEWED AND ACCEPTED BY THE AOR AND EOR (SE AND/OR ME/EE) PRIOR TO START OF INSTALLATION OF THE BRACING/SUPPORT. IOR SHALL ENSURE THE ABOVE REQUIREMENTS ARE SATISFIED.

ANCHORAGE AND SUPPORTS OF ALL EQUIPMENT TO BE INSTALLED AS A PART OF THIS PROJECT SHALL BE DETAILED ON CONSTRUCTION DOCUMENTS, EXCEPT THOSE EXEMPT BY 2019 CBC SECTION 1617A.1.18. EQUIPMENT SUPPORTS AND ANCHORAGE SHALL BE APPROVED BY THE APPROPRIATE DESIGN PROFESSIONAL OF RECORD AND OSHPD AS PART OF FIELD REVIEWS/OBSERVATIONS. THE INSPECTOR OF RECORD (IOR) SHALL ASSURE THAT THE ABOVE REQUIREMENTS ARE ENFORCED.

EXPANSION ANCHORS FOR USE IN CONCRETE IN DRY LOCATIONS SHALL BE HILTI CARBON STEEL KWIK BOLT TZ2 WEDGE ANCHORS. EXPANSION ANCHORS FOR USE IN CONCRETE IN DAMP AND WET LOCATIONS SHALL BE HILTI STAINLESS STEEL KWIK BOLT TZ2 WEDGE ANCHORS. EXPANSION ANCHORS FOR USE IN GROUT FILLED MASONRY IN DRY LOCATIONS SHALL BE HILTI KWIK BOLT TZ2 CARBON STEEL WEDGE ANCHORS. EXPANSION ANCHORS FOR USE IN GROUT FILLED MASONRY IN DAMP AND WET LOCATIONS SHALL BE HILTI KWIK BOLT TZ2 STAINLESS STEEL WEDGE ANCHORS. PROVIDE ANCHORS OF DIAMETER AND MINIMUM EMBEDMENT INDICATED. DRY LOCATIONS ARE DEFINED AS LOCATIONS NOT NORMALLY SUBJECT TO DAMPNESS OR WETNESS. DAMP LOCATIONS ARE DEFINED AS PARTIALLY PROTECTED LOCATIONS UNDER CANOPIES, MARQUEES, ROOFED PORCHES, AND LIKE LOCATIONS AND INTERIOR LOCATIONS SUBJECT TO MODERATE DEGREES OF MOISTURE, SUCH AS SOME BASEMENTS. WET LOCATIONS ARE DEFINED AS INSTALLATIONS UNDERGROUND OR IN CONCRETE SLABS OR MASONRY IN DIRECT CONTACT WITH THE EARTH, LOCATIONS SUBJECT TO SATURATION WITH WATER OR OTHER LIQUIDS, AND LOCATIONS EXPOSED TO WEATHER AND UNPROTECTED.

PROOF LOAD TEST FOR WEDGE TYPE ANCHOR BOLTS: WHERE ANCHOR BOLTS OF THE WEDGE EXPANSION TYPE ARE LOADED IN PULLOUT OR SHEAR, 50% OF THE BOLTS (ALTERNATE BOLTS IN ANY GROUP ARRANGEMENT) SHALL BE PROOF TESTED AT LEAST 24 HOURS AFTER INSTALLATION IN THE PRESENCE OF PROJECT INSPECTOR TO THE TEST VALUES LISTED FOR THE PARTICULAR ANCHOR. IF ANY BOLTS FAIL THE PROOF LOAD TEST, TEST ALL ANCHOR BOLTS OF THE SAME TYPE, INSTALLED BY THE SAME TRADE, AND NOT PREVIOUSLY TESTED, UNTIL 20 CONSECUTIVE ANCHORS PASS, THEN RESUME INITIAL TEST FREQUENCY. ANCHORS SHALL BE TESTED WITH A CALIBRATED TORQUE WRENCH AND MUST ATTAIN SPECIFIED TORQUE VALUE WITHIN 1/2 TURN OF THE NUT.

TEST: TORQUE

BOLT DIAMETER (INCHES):	3/8	1/2	5/8	3/4
KB-TZ2 CARBON CONCRETE TORQUE VALUE (FT-LBS), ESR-4266:	30	50	40	110
KB-TZ2 SS CONCRETE TORQUE VALUE (FT-LBS), ESR-4266:	30	40	60	110
KB-TZ2 CARBON GROUT FILLED MASONRY TORQUE VALUE (FT-LBS), ESR-4561:	15	25	30	50
KB-TZ2 SS GROUT FILLED MASONRY TORQUE VALUE (FT-LBS), ESR-4561:	15	25	35	50

WHEN INSTALLING DRILLED-IN ANCHORS IN EXISTING NON-PRESTRESSED REINFORCED CONCRETE, USE CARE AND CAUTION TO AVOID CUTTING OR DAMAGING THE EXISTING REINFORCING BARS. MAINTAIN A MINIMUM CLEARANCE OF ONE INCH BETWEEN THE REINFORCEMENT AND THE DRILLED-IN ANCHOR.

30 SEISMIC NOTES

ELECTRICAL BRANCH CIRCUIT PANELBOARD, FLUSH MOUNTED. BAR DENOTES DOOR SIDE OF FLUSH MOUNTED PANEL.

ELECTRICAL BRANCH CIRCUIT PANELBOARD, SURFACE MOUNTED.

SIGNAL TERMINAL CABINET, FLUSH MOUNTED. BAR DENOTES DOOR SIDE OF FLUSH MOUNTED PANEL.

SIGNAL TERMINAL CABINET, SURFACE MOUNTED.

DISCONNECT SWITCH, WITH RATINGS AS INDICATED UON. F INDICATES FUSED SWITCH. PROVIDE TIME DELAY FUSES OF THE SIZE AND TYPE REQUIRED BY EQUIPMENT MANUFACTURER.

MOTOR, WITH RATINGS AS INDICATED.

FLUORESCENT LUMINAIRE SURFACE MOUNTED ON FLUSH WALL OUTLET BOX UON.

LED WALL MOUNT LUMINAIRE WITH ADJACENT CONCEALED OUTLET BOX CONNECTED TO AN ESSENTIAL CIRCUIT.

LED OR COMPACT FLUORESCENT LUMINAIRE FLUSH CEILING MOUNTED WITH ADJACENT OUTLET BOX UON.

LED OR COMPACT FLUORESCENT LUMINAIRE ON FLUSH WALL MOUNTED OUTLET BOX UON.

A — LUMINAIRE DESIGNATION. LETTER INDICATES LUMINAIRE TYPE.

TELEPHONE OUTLET IN FLUSH WALL OUTLET BOX AT +18" UON. W INDICATES WALL MOUNTED INSTRUMENT AT +54". PROVIDE 3/4"CO TO ACCESSIBLE CEILING SPACE.

V — CABLE TELEVISION OUTLET IN FLUSH WALL OUTLET BOX. COORDINATE MOUNTING HEIGHT SO THE DEVICE IS BEHIND THE SELECTED LOCATION OF THE TELEVISION SET UON.

V — CABLE TELEVISION OUTLET IN FLUSH CEILING OUTLET BOX UON.

S — PAGING SPEAKER IN FLUSH CEILING OUTLET BOX WITH GRILL UON.

DATA OUTLET IN FLUSH WALL OUTLET BOX UON. PROVIDE 3/4"C.O. TO ACCESSIBLE CEILING SPACE. CHEVRON INDICATES OUTLET MOUNTED ON PATIENT HEADWALL.

DATA OUTLET IN FLUSH CEILING OUTLET. C=CEILING, F=FLOOR.OUTLET BOX UON. PROVIDE 3/4"C.O. TO ACCESSIBLE CEILING SPACE.

EXISTING SIMPLEX 8524 OCTAGONAL CLOCK WALL OUTLET BOX UON.

C — ANALOG CLOCK ON RECESSED WALL MOUNTED OUTLET BOX UON. LOCATE BOX TO ALLOW CENTER OF CLOCK TO BE MOUNTED AT +90"AFF UON.

T — DIGITAL CLOCK/ELAPSED TIMER 0N RECESSED WALL MOUNTED OUTLET BOX UON. LOCATE BOX TO ALLOW CENTER OF CLOCK/TIMER TO BE MOUNTED 90"AFF UON.

1 / E-01 — DETAIL REFERENCE. TOP NUMBER INDICATES DETAIL NUMBER AND BOTTOM NUMBER INDICATES SHEET NUMBER.

Electrical Abbreviations

ASD	ADJUSTABLE SPEED DRIVE	NTS	NOT TO SCALE
AWGG	AMERICAN WIRE GAGE GROUND CONDUCTOR, SIZE AS INDICATED.	OCPD	OVERCURRENT PROTECTION DEVICE
CO	CONDUIT ONLY WITH NYLON PULLROPE	SCCA	SHORT CIRCUIT CURRENT AVAILABLE
EX	EXISTING	SPD	SURGE PROTECTIVE DEVICE
GFCI	GROUND FAULT CIRCUIT INTERRUPTER	STR	STARTER
(N)	NEW	TA	TEMPERATURE ALARM
		TSP	TWISTED SHIELDED PAIR
		TU	TERMINAL UNIT, SEE MECHANICAL SHEETS.
		UON	UNLESS OTHERWISE NOTED

1/2"C. 2-12AWG & 1-12AWGG

1/2"C. 3-12AWG & 1-12AWGG

3/4"C. 4-12AWG & 1-12AWGG

3/4"C. 5-12AWG & 1-12AWGG

3/4"C. 6-12AWG & 1-12AWGG

3/4"C. 7-12AWG & 1-12AWGG

1"C. 8-12AWG & 1-12AWGG

1"C. 9-12AWG & 1-12AWGG

A-1,3 — CONDUIT HOME RUN WITH 3-12AWG & 1-12AWGG TO PANEL "A", CIRCUITS 1 AND 3.

CONDUIT RUN CONCEALED IN OR ABOVE CEILING, OR IN WALLS.

CONDUIT RUN IN OR BELOW FLOOR, OR BELOW GRADE.

CONDUIT RUN EXPOSED.

CONDUIT RISER DOWN.

CONDUIT RISER UP.

CONDUIT RUN STUBBED OUT, MARKED AND CAPPED.

CONDUIT RUN CONTINUATION.

EX — EXISTING SYSTEM CONDUIT.

LC — 3/4"C. 2-12AWG, 1-12AWGG, & (1) 2-18AWG TSP CABLE UON.

DOTTED LINE INDICATES EQUIPMENT TO BE DISCONNECTED AND REMOVED UON.

FLEXIBLE CONDUIT.

SURFACE MOUNTED MULTI-OUTLET RACEWAY WITH RECEPTACLES 30" ON CENTER UON. FEED THROUGH PROTECTION MAY BE USED TO PROTECT ALL DEVICES IN THE RACEWAY WHERE GFCI PROTECTION IS INDICATED. +48"UON.

ELECTRICAL CONNECTION TO EQUIPMENT UON. VERIFY ROUGH-IN REQUIREMENTS FOR EACH PIECE OF EQUIPMENT.

J — JUNCTION BOX WITH BLANK FACEPLATE. JUNCTION BOX SHALL BE CONCEALED UON.

J — JUNCTION BOX WITH BLANK FACEPLATE FLUSH WALL MOUNTED AT +18"UON.

S ab — SINGLE POLE TOGGLE SWITCH IN FLUSH WALL OUTLET BOX UON. SUBSCRIPTS INDICATE OUTLETS CONTROLLED AND A GANGED ASSEMBLY WITH A SWITCH OF THE TYPE INDICATED FOR EACH SUBSCRIPT. +42" UON.

$ab — LOW VOLTAGE MULTIFUNCTION ELECTRONIC DIMMING SWITCH IN FLUSH WALL OUTLET BOX UON. SUBSCRIPTS INDICATE OUTLETS CONTROLLED WITH A SWITCH OF THE TYPE INDICATED FOR EACH SUBSCRIPT. +42" UON.

S TC — ELAPSED TIMER CONTROL SWITCH. +48" UON.

S 3 — THREE-WAY TOGGLE SWITCH IN FLUSH WALL OUTLET BOX UON. +42"UON.

S P — SWITCH WITH PILOT LIGHT IN FLUSH WALL OUTLET BOX. +42"UON.

DIMMER SWITCH IN FLUSH WALL OUTLET BOX AT +42"UON.

OS a — OCCUPANCY SENSOR IN FLUSH WALL OUTLET BOX UON. SUBSCRIPTS INDICATE OUTLETS CONTROLLED AND A GANGED ASSEMBLY WITH A SWITCH OF THE TYPE INDICATED FOR EACH SUBSCRIPT. +42" UON.

SPECIAL RECEPTACLE IN FLUSH WALL OUTLET BOX AT +18" UON.

DUPLEX RECEPTACLE IN FLUSH WALL OUTLET BOX AT +18" UON. CHEVRON INDICATES OUTLET MOUNTED ON PATIENT HEADWALL. WHEN 'TV' IS NOTED FOR THE RECEPTACLE, LOCATE THE OUTLET SO THE DEVICE IS BEHIND THE SELECTED LOCATION OF THE TELEVISION SET UON.

DUPLEX RECEPTACLE CONNECTED TO EMERGENCY CIRCUIT IN FLUSH WALL OUTLET BOX AT +18" UON. CHEVRON INDICATES OUTLET MOUNTED ON PATIENT HEADWALL.

DOUBLE DUPLEX RECEPTACLE IN FLUSH WALL OUTLET BOX AT +18" UON.

DOUBLE DUPLEX RECEPTACLE CONNECTED TO EMERGENCY CIRCUIT AND MOUNTED IN FLUSH WALL OUTLET BOX AT +18" UON.

DOUBLE DUPLEX RECEPTACLE WITH ONE GFCI RECEPTACLE IN FLUSH WALL OUTLET BOX AT +18" UON. GFCI RECEPTACLE SHALL PROVIDE DOWNSTREAM PROTECTION OF SECOND RECEPTACLE.

GFCI DUPLEX RECEPTACLE ON NORMAL POWER CIRCUIT IN FLUSH WALL OUTLET BOX AT +18" UON.

GFCI DUPLEX RECEPTACLE ON EMERGENCY POWER CIRCUIT IN FLUSH WALL OUTLET BOX AT +18" UON.

DUPLEX RECEPTACLE IN FLUSH CEILING OUTLET BOX UON.

FLUSH FLOOR POKE THROUGH FITTING WITH 4 SIMPLEX RECEPTACLES AND 4 DATA JACKS UON.

DUPLEX RECEPTACLE ON EMERGENCY POWER CIRCUIT IN FLUSH CEILING OUTLET BOX UON.

20 PLAN SYMBOL LIST

THE NUMBERS IN THE LOAD COLUMN OF THE PANEL SCHEDULES REFER TO THE CATEGORY NUMBERS IDENTIFIED BELOW. DEMAND FACTORS ARE APPLIED BASED ON THE 2019 CALIFORNIA ELECTRICAL CODE SECTION LISTED FOR EACH CATEGORY. THE PANEL SCHEDULE CALCULATED LOAD IS DETERMINED BY SUBTRACTING FROM THE CONNECTED LOAD THE AMOUNT ALLOWED BY CATEGORIES 2, 4, 7, AND 8. THE CONDUCTOR LOAD IS DETERMINED BY ADDING THE AMOUNTS REQUIRED BY CATEGORIES 1, 3, AND 6 TO THE CALCULATED LOAD.

1. CONTINUOUS LOAD (CEC 220-14(A)(D))
2. RECEPTACLE LOAD (CEC 220-14I)
3. MOTOR LOAD (CEC 220-14C)
4. KITCHEN EQUIPMENT LOAD (CEC 220-56)
5. CONNECTED LOAD (NON-CONTINUOUS LOAD WITH NO DEMAND FACTOR)
6. METERED LOAD (CEC 220-87)
7. ELEVATOR LOAD (CEC 620-14)
8. X-RAY EQUIPMENT DEMAND (CEC 517-73)

15 PANEL SCHEDULE LOAD CATEGORY DESCRIPTIONS

VENTURA COUNTY HEALTH CARE AGENCY

PUBLIC VENTURA COUNTY WORKS
ENGINEERING SERVICES

RASMUSSEN & ASSOCIATES
Architecture
Planning
Interiors
21 S. California Street
Fourth Floor
Ventura, California 93001
(805) 648-1234

IRJ ENGINEERS, INC.
MECHANICAL & ELECTRICAL ENGINEERS
JOB No. 2027-00

FOR PLAN REVIEW ONLY

PROFESSIONAL SEALS

LICENSED ARCHITECT JAY LOMAGNO C-20801 REN 12-31-23 STATE OF CALIFORNIA

REGISTERED PROFESSIONAL ENGINEER JACK V. IVERS No. 12522 Exp. 9/23 ELECTRICAL STATE OF CALIFORNIA

PERMIT APPROVAL STAMP

REVIEWED IN ACCORDANCE WITH THE REQUIREMENTS OF T24, CCR
APPROVED
Department of Health Care Access and Information
FACILITIES DEVELOPMENT DIVISION
9/28/2022, 3:17:57 PM
H202495-56-00
Laura Baldrati

PERMIT NO HCAI #H202495-56-00

NO	REVISION	DATE
△		

PUBLIC WORKS PROJECT MANAGER

CONSULTANT PROJECT MANAGER: Jay Lomagno

DRAWN BY

CHECKED BY

CONSULTANT JOB NO: A000495

DATE: 06-15-2022

PROJECT TITLE AND ADDRESS

VENTURA COUNTY MEDICAL CENTER PEDIATRIC UNIT

300 HILLMONT AVE
VENTURA, CA 93003

COUNTY SPEC NUMBER: CP21-04

COUNTY PROJECT NUMBER: P6T20009

COUNTY DWG NO

SHEET 62 OF 89

SHEET TITLE: SYMBOL LISTS, NOTES, LUMINAIRE SCHEDULE

SHEET NO: E0.1

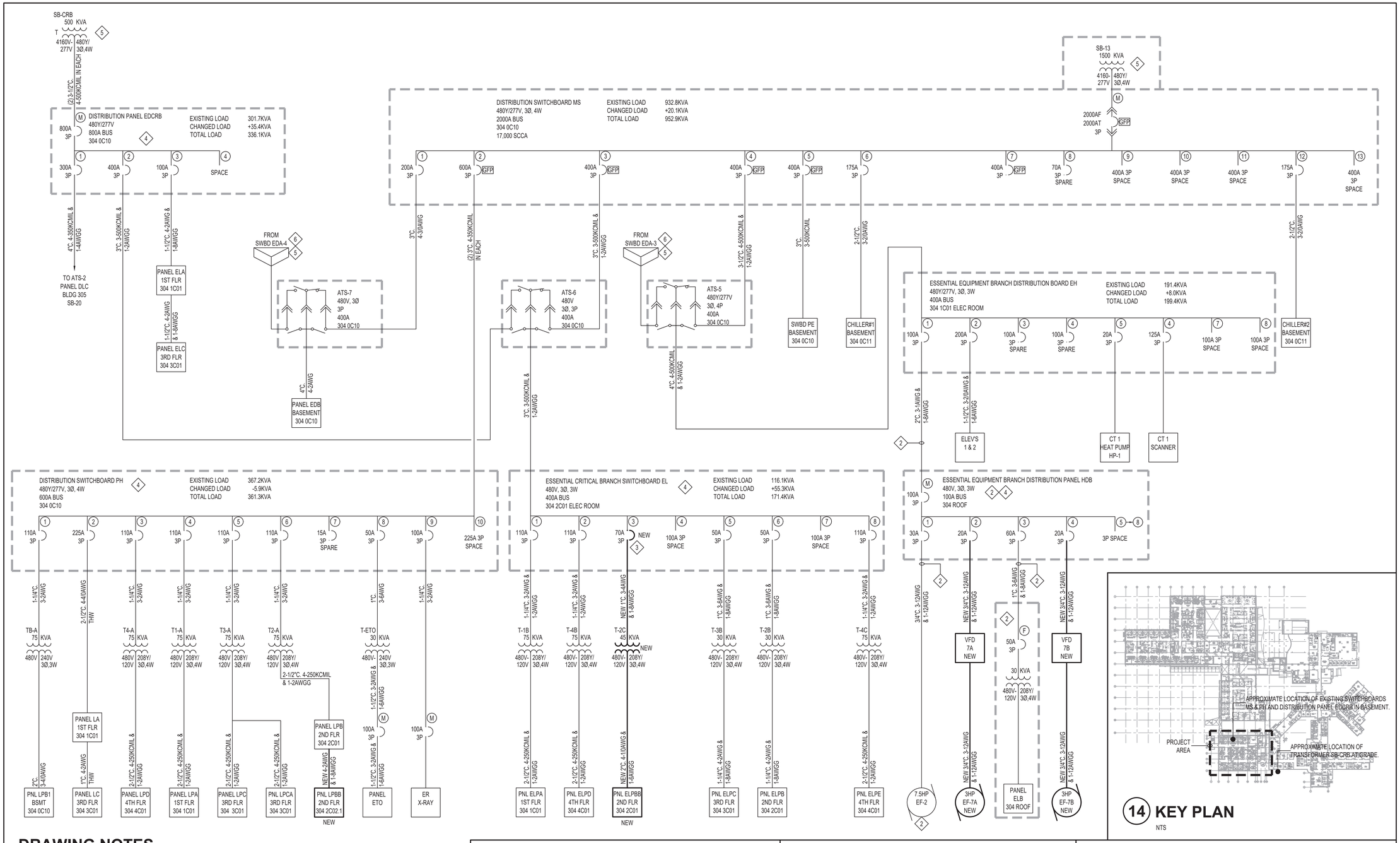

14 KEY PLAN

NTS

DRAWING NOTES

1. ALL ELECTRICAL WORK SHOWN IS EXISTING UON.
2. EQUIPMENT INSTALLED UNDER PERMIT NO. OSHPD S210439-56-00.
3. PROVIDE MINIMUM 14KAIC RATED CIRCUIT BREAKER.
4. REFER TO DRAWING E4.1 FOR NEW AND MODIFIED PANEL SCHEDULES.
5. THE UPSTREAM DISTRIBUTION HAS CAPACITY FOR THE CHANGES IN LOAD.
6. SWITCHBOARD EDA IS PART OF THE EXISTING EQUIPMENT BRANCH DISTRIBUTION SYSTEM.

40 PARTIAL SINGLE LINE DIAGRAM 1

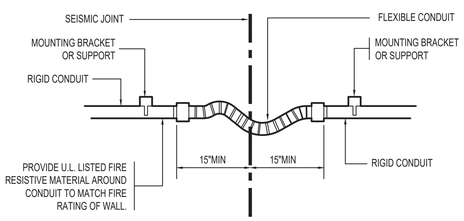

FLEXIBLE CONDUITS SHALL BE INSTALLED WITH SUFFICIENT FLEXIBILITY TO ACCOMMODATE MOTION EQUAL TO OR GREATER THAN THE DEPTH OF THE SEISMIC JOINT IN ALL DIRECTIONS. THE INSTALLED CONDUITS SHALL ALSO INCLUDE FLEXIBILITY TO ACCOMMODATE THE MAXIMUM DIFFERENTIAL SETTLEMENT IN A VERTICAL DIRECTION. PROVIDE PULL POINT AT EACH END OF THE FLEXIBLE PORTION OF THE CONDUIT RUN WHENEVER THE TOTAL BENDS BETWEEN PULL POINTS IN THE RUN ARE GREATER THAN 270 AND LESS THAN 360°

30 CONDUIT AT SEISMIC JOINT

NTS

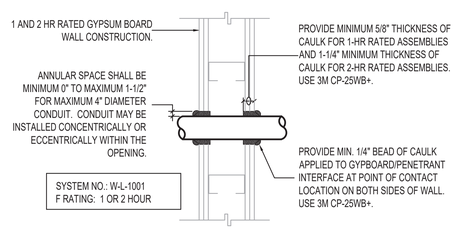

20 GYPBOARD WALL PENETRATION FIRESTOP

NTS

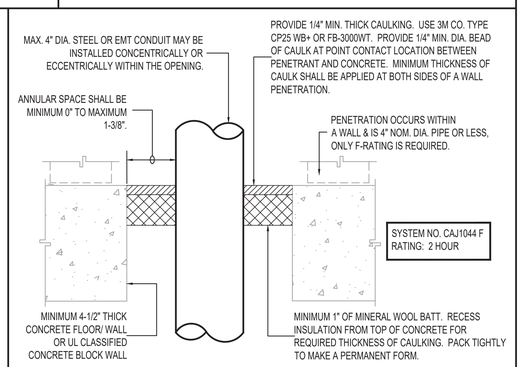

15 CONCRETE FLOOR/WALL PENETRATION FIRESTOP

NTS

VENTURA COUNTY HEALTH CARE AGENCY

PUBLIC WORKS
VENTURA COUNTY
ENGINEERING SERVICES

RASMUSSEN & ASSOCIATES
Architecture
Planning
Interiors
21 S. California Street
Fourth Floor
Ventura, California 93001
(805) 648-1234

IRJ ENGINEERS, INC.
MECHANICAL & ELECTRICAL ENGINEERS
4517 MARKET STREET, SUITE 1B VENTURA, CALIFORNIA 93003
(805) 642-2355

FOR PLAN REVIEW ONLY

PROFESSIONAL SEALS

PERMIT APPROVAL STAMP

REVIEWED IN ACCORDANCE WITH THE REQUIREMENTS OF T24, CCR
APPROVED
Department of Health Care Access and Information
FACILITIES DEVELOPMENT DIVISION
9/28/2022, 3:17:57 PM
H202495-56-00
Laura Baldrati

PERMIT NO HCAI #H202495-56-00

NO	REVISION	DATE
1		

PUBLIC WORKS PROJECT MANAGER
CONSULTANT PROJECT MANAGER Jay Lomagno
DRAWN BY
CHECKED BY
CONSULTANT JOB NO A000495
DATE 06-15-2022

PROJECT TITLE AND ADDRESS

VENTURA COUNTY MEDICAL CENTER PEDIATRIC UNIT

300 HILLMONT AVE
VENTURA, CA 93003

COUNTY SPEC NUMBER CP21-04
COUNTY PROJECT NUMBER P6T20009
COUNTY DWG NO
SHEET 63 OF 89

SHEET TITLE
PARTIAL SINGLE LINE DIAGRAM, ELECTRICAL DETAIL, KEY PLAN

SHEET NO
E0.2

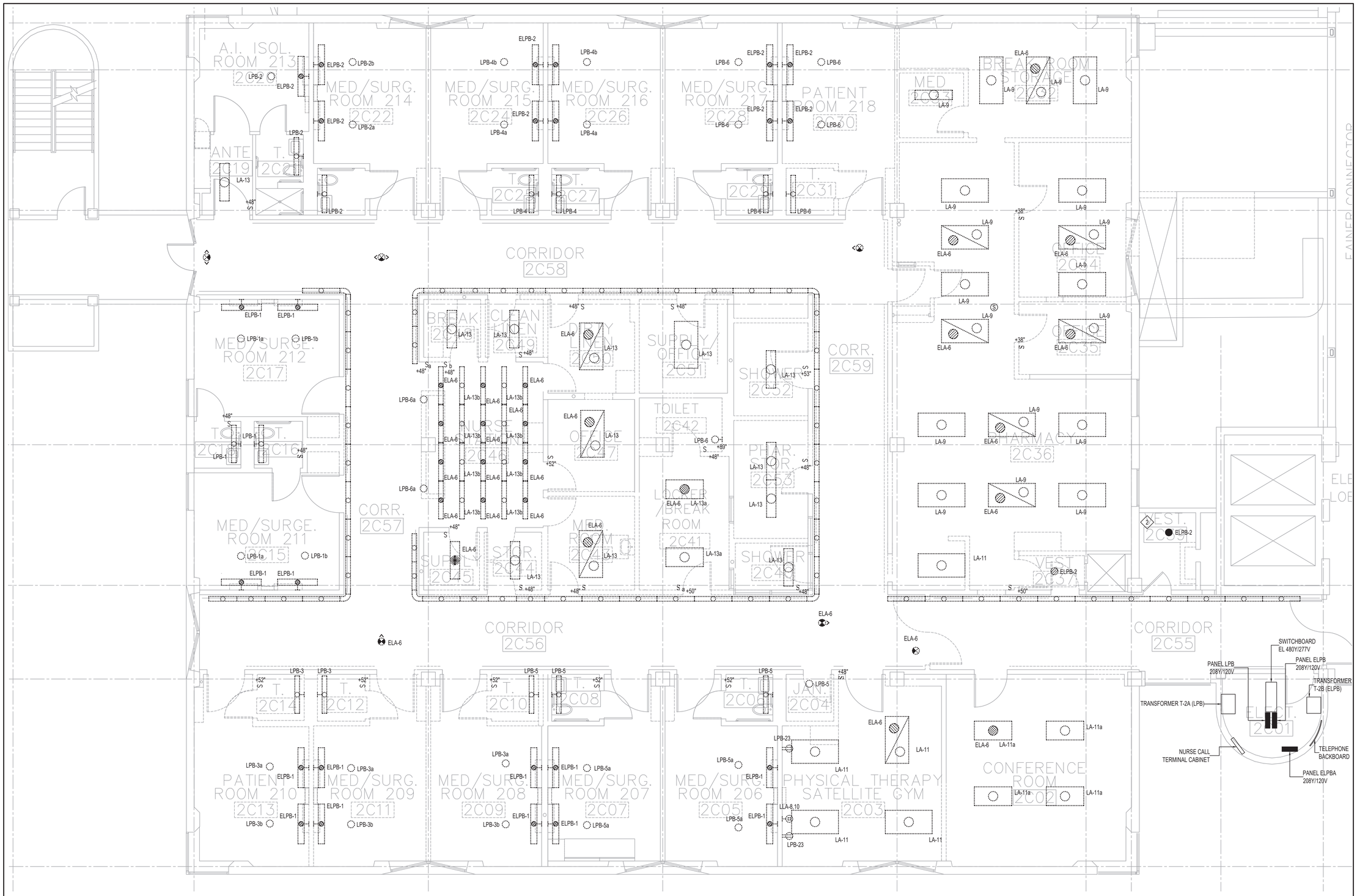

DRAWING NOTES

1. ALL ELECTRICAL WORK SHOWN IS EXISTING UON.
2. INTERCEPT EXISTING CONDUIT HOMERUN TO ELPB-2 AND MODIFY PER DRAWING E3.1.
3. THE CORRIDOR LUMINAIRES TO BE DEMOLISHED ARE SERVED FROM PANEL LA CIRCUIT 11 AND PANEL ELA CIRCUIT 6.

(40) PARTIAL SECOND FLOOR LIGHTING DEMOLITION PLAN

SCALE 1/4" = 1' - 0"

N

VENTURA COUNTY HEALTH CARE AGENCY

PUBLIC VENTURA COUNTY WORKS

ENGINEERING SERVICES

RASMUSSEN & ASSOCIATES
Architecture
Planning
Interiors
21 S. California Street
Fourth Floor
Ventura, California 93001
(805) 648-1234

IRJ ENGINEERS, INC.
MECHANICAL & ELECTRICAL ENGINEERS
4517 MARKET STREET, SUITE 1B VENTURA, CALIFORNIA 93003
(805) 642-2355

FOR PLAN REVIEW ONLY

PROFESSIONAL SEALS

PERMIT APPROVAL STAMP

REVIEWED IN ACCORDANCE WITH THE REQUIREMENTS OF T24, CCR
APPROVED
Department of Health Care Access and Information
FACILITIES DEVELOPMENT DIVISION
9/28/2022, 3:17:57 PM
H202495-56-00
Laura Baldrati

PERMIT NO HCAI #H202495-56-00

NO	REVISION	DATE

PUBLIC WORKS PROJECT MANAGER

CONSULTANT PROJECT MANAGER Jay Lomagno

DRAWN BY | CHECKED BY

CONSULTANT JOB NO A000495 | DATE 06-15-2022

PROJECT TITLE AND ADDRESS

VENTURA COUNTY MEDICAL CENTER PEDIATRIC UNIT

300 HILLMONT AVE
VENTURA, CA 93003

COUNTY SPEC NUMBER CP21-04

COUNTY PROJECT NUMBER P6T20009

COUNTY DWG NO | SHEET 64 OF 89

SHEET TITLE
PARTIAL SECOND FLOOR LIGHTING DEMOLITION PLAN

SHEET NO E2.1

Y:\2021\IRR.DWG 20220615 E2021-03B.DWG 6/15/2022 2:27PM ©IRJ ENGINEERS, INC.

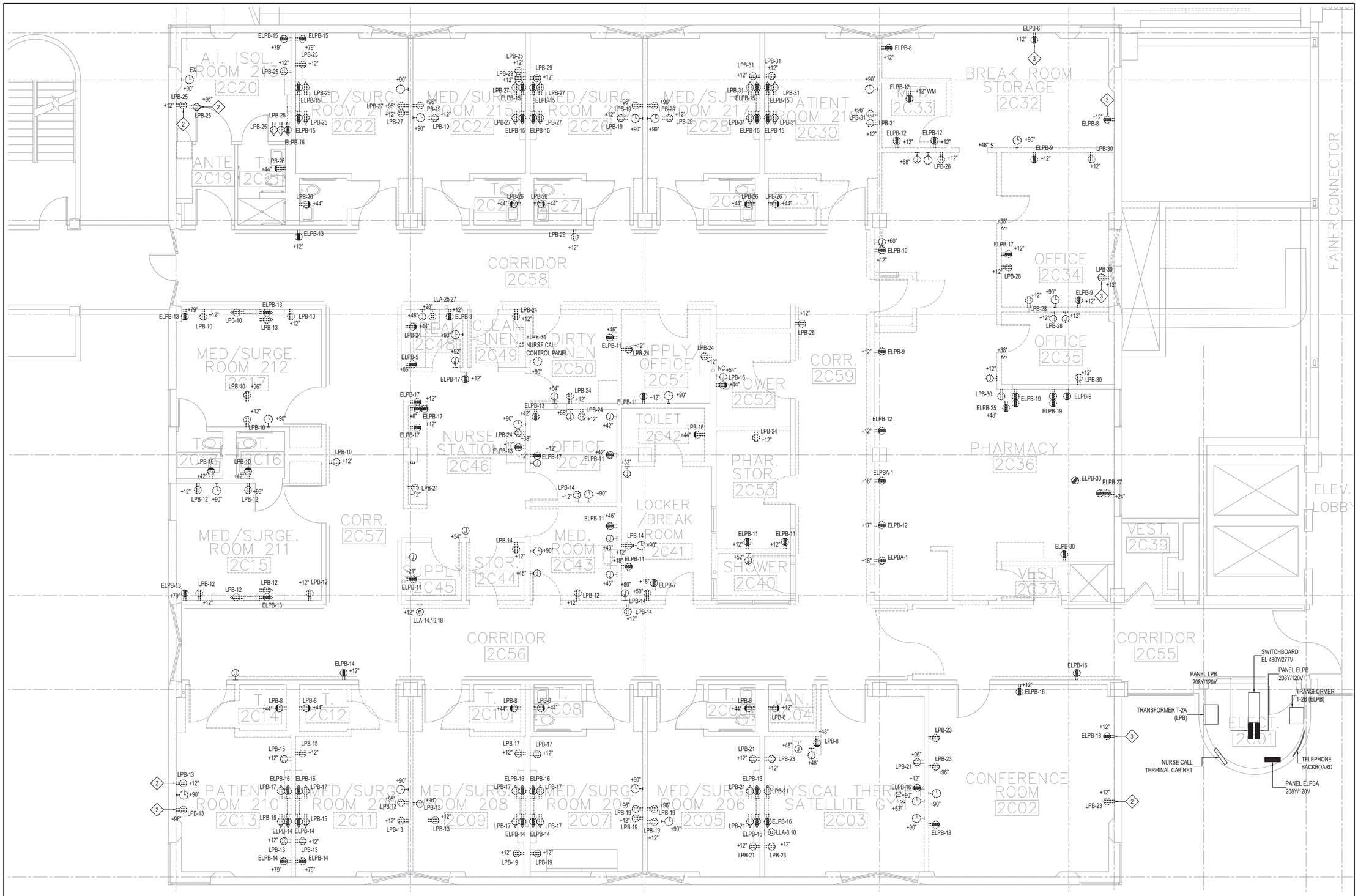

DRAWING NOTES

1. ALL ELECTRICAL WORK SHOWN IS EXISTING UON.
2. DEMOLISH EXISTING RECEPTACLE AND PROTECT EXISTING OUTLET BOX AND CONDUITS IN PLACE FOR REUSE.
3. DEMOLISH EXISTING RECEPTACLE AND PROTECT EXISTING OUTLET BOX AND CONDUITS IN PLACE FOR FUTURE REUSE. PROVIDE BLANK FACEPLATE.

40 PARTIAL SECOND FLOOR POWER DEMOLITION PLAN

SCALE 1/4" = 1' - 0"

VENTURA COUNTY HEALTH CARE AGENCY

PUBLIC WORKS VENTURA COUNTY

ENGINEERING SERVICES

RASMUSSEN & ASSOCIATES
Architecture
Planning
Interiors
21 S. California Street
Fourth Floor
Ventura, California 93001
(805) 648-1234

IRJ ENGINEERS, INC.
MECHANICAL & ELECTRICAL ENGINEERS
4517 MARKET STREET, SUITE 1B VENTURA, CALIFORNIA 93003
(805) 642-2355

FOR PLAN REVIEW ONLY

PROFESSIONAL SEALS

PERMIT APPROVAL STAMP

REVIEWED IN ACCORDANCE WITH THE REQUIREMENTS OF T24, CCR
APPROVED
Department of Health Care Access and Information
FACILITIES DEVELOPMENT DIVISION
9/28/2022, 3:17:57 PM
H202495-56-00
Laura Baldrati

PERMIT NO HCAI #H202495-56-00

NO	REVISION	DATE

PUBLIC WORKS PROJECT MANAGER

CONSULTANT PROJECT MANAGER
Jay Lomagno

DRAWN BY | CHECKED BY

CONSULTANT JOB NO A000495 | DATE 06-15-2022

PROJECT TITLE AND ADDRESS

VENTURA COUNTY MEDICAL CENTER PEDIATRIC UNIT

300 HILLMONT AVE
VENTURA, CA 93003

COUNTY SPEC NUMBER CP21-04

COUNTY PROJECT NUMBER P6T20009

COUNTY DWG NO | SHEET 65 OF 89

SHEET TITLE
PARTIAL SECOND FLOOR POWER DEMOLITION PLAN

SHEET NO
E2.2

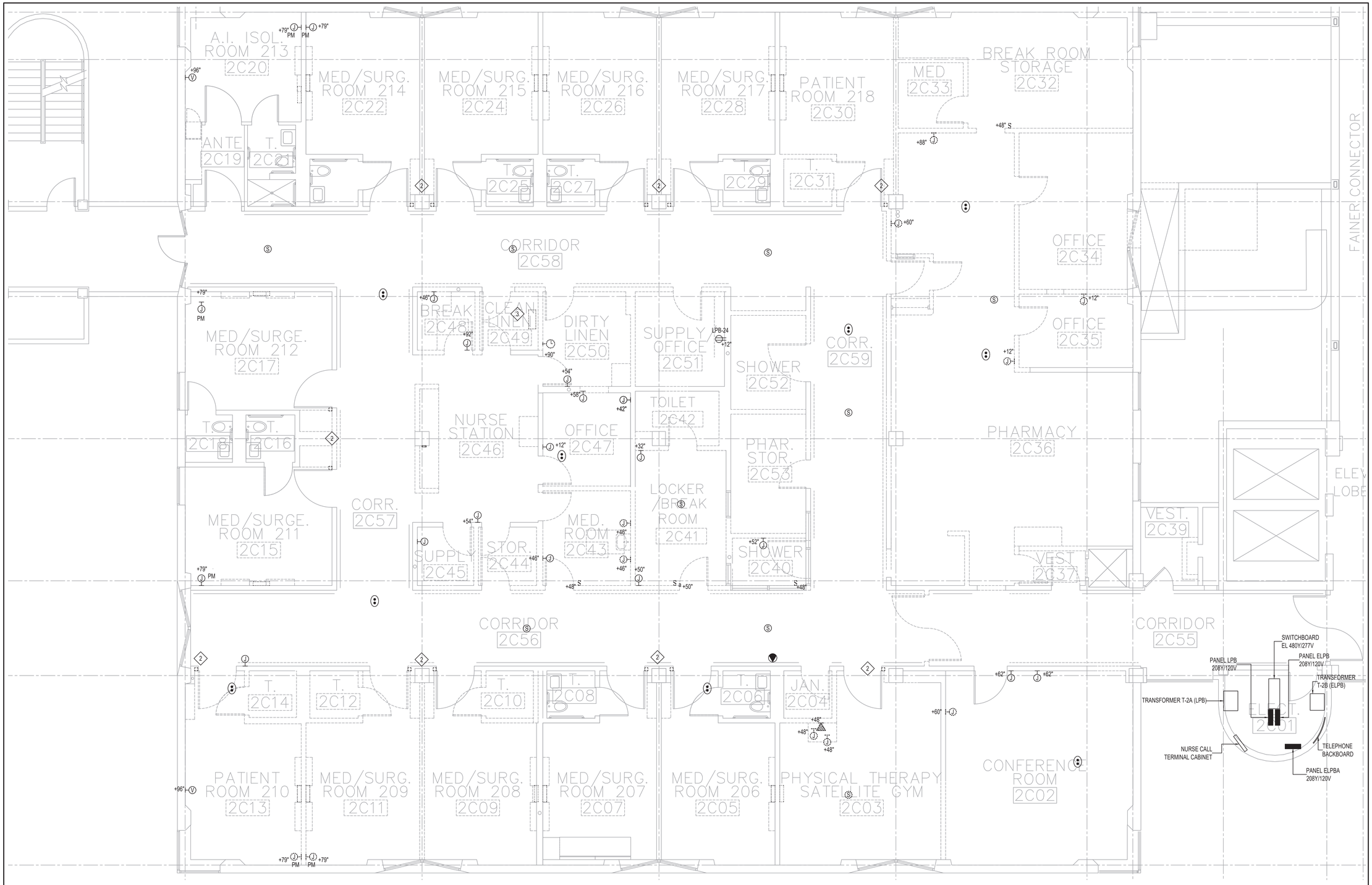

DRAWING NOTES

1. ALL ELECTRICAL WORK SHOWN IS EXISTING UON.
2. DISCONNECT EXISTING DOOR HOLDER, TYPICAL.
3. NURSE CALL CONTROL PANEL SHALL BE RELOCATED TO NEW ROOM 2C02.1. REFER TO DRAWING E3.3 FOR CIRCUITING.

40 PARTIAL SECOND FLOOR DATA AND CATV DEMOLITION PLAN

SCALE 1/4" = 1' - 0"

N

VENTURA COUNTY HEALTH CARE AGENCY

PUBLIC VENTURA COUNTY WORKS

ENGINEERING SERVICES

RASMUSSEN & ASSOCIATES
Architecture
Planning
Interiors
21 S. California Street
Fourth Floor
Ventura, California 93001
(805) 648-1234

IRJ ENGINEERS, INC.
MECHANICAL & ELECTRICAL ENGINEERS
4517 MARKET STREET, SUITE 1B VENTURA, CALIFORNIA 93003
(805) 642-2355

FOR PLAN REVIEW ONLY

PROFESSIONAL SEALS

PERMIT APPROVAL STAMP

REVIEWED IN ACCORDANCE WITH THE REQUIREMENTS OF T24, CCR
APPROVED
Department of Health Care Access and Information
FACILITIES DEVELOPMENT DIVISION
9/28/2022, 3:17:57 PM
H202495-56-00
Laura Baldrati

PERMIT NO HCAI #H202495-56-00

NO	REVISION	DATE
△		

PUBLIC WORKS PROJECT MANAGER

CONSULTANT PROJECT MANAGER
Jay Lomagno

DRAWN BY | CHECKED BY

CONSULTANT JOB NO A000495 | DATE 06-15-2022

PROJECT TITLE AND ADDRESS

VENTURA COUNTY MEDICAL CENTER PEDIATRIC UNIT

300 HILLMONT AVE
VENTURA, CA 93003

COUNTY SPEC NUMBER CP21-04

COUNTY PROJECT NUMBER P6T20009

COUNTY DWG NO | SHEET 66 OF 89

SHEET TITLE
PARTIAL SECOND FLOOR DATA AND CATV DEMOLITION PLAN

SHEET NO
E2.3

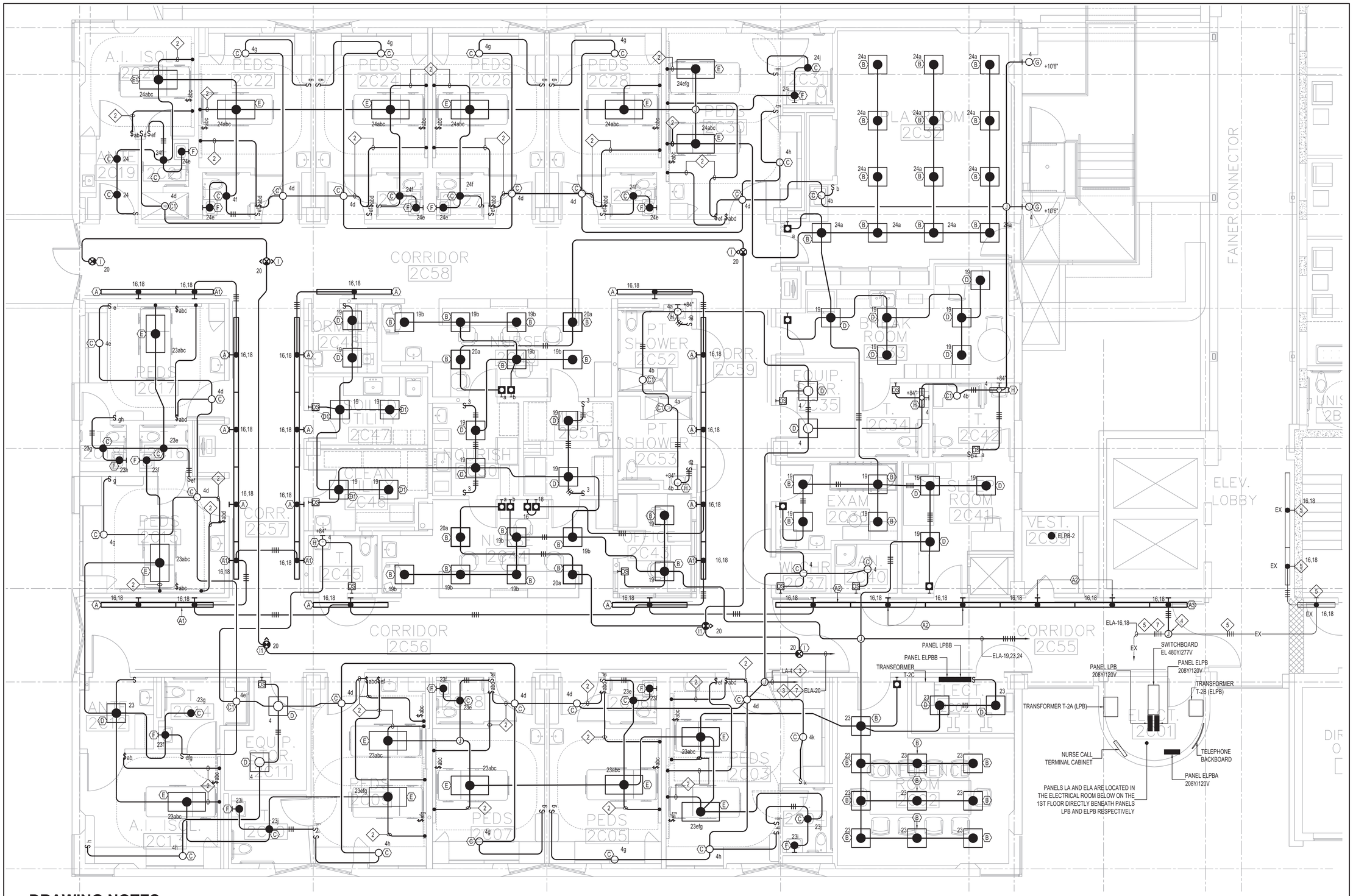

DRAWING NOTES

1. ALL ELECTRICAL WORK SHOWN IS NEW UON.
2. 3/4"C. FOR LOW VOLTAGE CONDUCTORS.
3. IN THE 2ND FLOOR CEILING SPACE EITHER INSIDE OR OUTSIDE OF ELECTRICAL ROOM 2C01, INTERCEPT EXISTING CONDUITS TO FIRST FLOOR PANELS LA AND ELA THAT FORMERLY SERVED CIRCUITS TO 2ND FLOOR LIGHTING THAT HAS BEEN DISCONNECTED AND DEMOLISHED. REMOVE EXISTING CONDUCTORS AND PULL NEW CONDUCTORS FOR NEW CIRCUITS INDICATED.
4. INTERCEPT HOMERUN CONDUIT TO PANEL ELA SERVING CORRIDOR LIGHTS INSTALLED UNDER OSHPD #S202350-56-00 AND EXTEND TO NEW CORRIDOR LIGHTS AS SHOWN.
5. ADD ONE 12AWG NEUTRAL CONDUCTOR TO THE EXISTING CONDUIT FILL AND REWIRE LUMINAIRES CIRCUITS TO HAVE A DEDICATED NEUTRAL RATHER THAN MULTIWIRE.
6. REFER TO ARCHITECTURAL REFLECTED CEILING PLAN FOR EXACT LOCATION OF LUMINAIRE.
7. INCLUDE AN OUTLET BOX IN THE HOMERUN, LOCATED DIRECTLY ABOVE PANEL ELPBB, TO FACILITATE FUTURE CONNECTION TO A LIFE SAFETY CIRCUIT WHEN IT IS AVAILABLE.

40 PARTIAL SECOND FLOOR LIGHTING PLAN

SCALE 1/4" = 1' - 0"

VENTURA COUNTY HEALTH CARE AGENCY

PUBLIC WORKS VENTURA COUNTY

ENGINEERING SERVICES

RASMUSSEN & ASSOCIATES
Architecture
Planning
Interiors
21 S. California Street
Fourth Floor
Ventura, California 93001
(805) 648-1234

IRJ ENGINEERS, INC.
MECHANICAL & ELECTRICAL ENGINEERS
4517 MARKET STREET, SUITE 1B VENTURA, CALIFORNIA 93003
(805) 642-2355

JOB No. 2027-00

FOR PLAN REVIEW ONLY

PROFESSIONAL SEALS

PERMIT APPROVAL STAMP

REVIEWED IN ACCORDANCE WITH THE REQUIREMENTS OF T24, CCR
APPROVED
Department of Health Care Access and Information
FACILITIES DEVELOPMENT DIVISION
9/28/2022, 3:17:57 PM
H202495-56-00
Laura Baldrati

PERMIT NO HCAI #H202495-56-00

NO	REVISION	DATE
△		

PUBLIC WORKS PROJECT MANAGER

CONSULTANT PROJECT MANAGER
Jay Lomagno

DRAWN BY	CHECKED BY
CONSULTANT JOB NO A000495	DATE 06-15-2022

PROJECT TITLE AND ADDRESS

VENTURA COUNTY MEDICAL CENTER PEDIATRIC UNIT

300 HILLMONT AVE
VENTURA, CA 93003

COUNTY SPEC NUMBER CP21-04

COUNTY PROJECT NUMBER P6T20009

COUNTY DWG NO

SHEET 67 OF 89

SHEET TITLE

PARTIAL SECOND FLOOR LIGHTING PLAN

SHEET NO

E3.1

Y2027008R.DWG 20220615 E2027-008.DWG 6/15/2022 2:27PM ©IRJ ENGINEERS, INC.

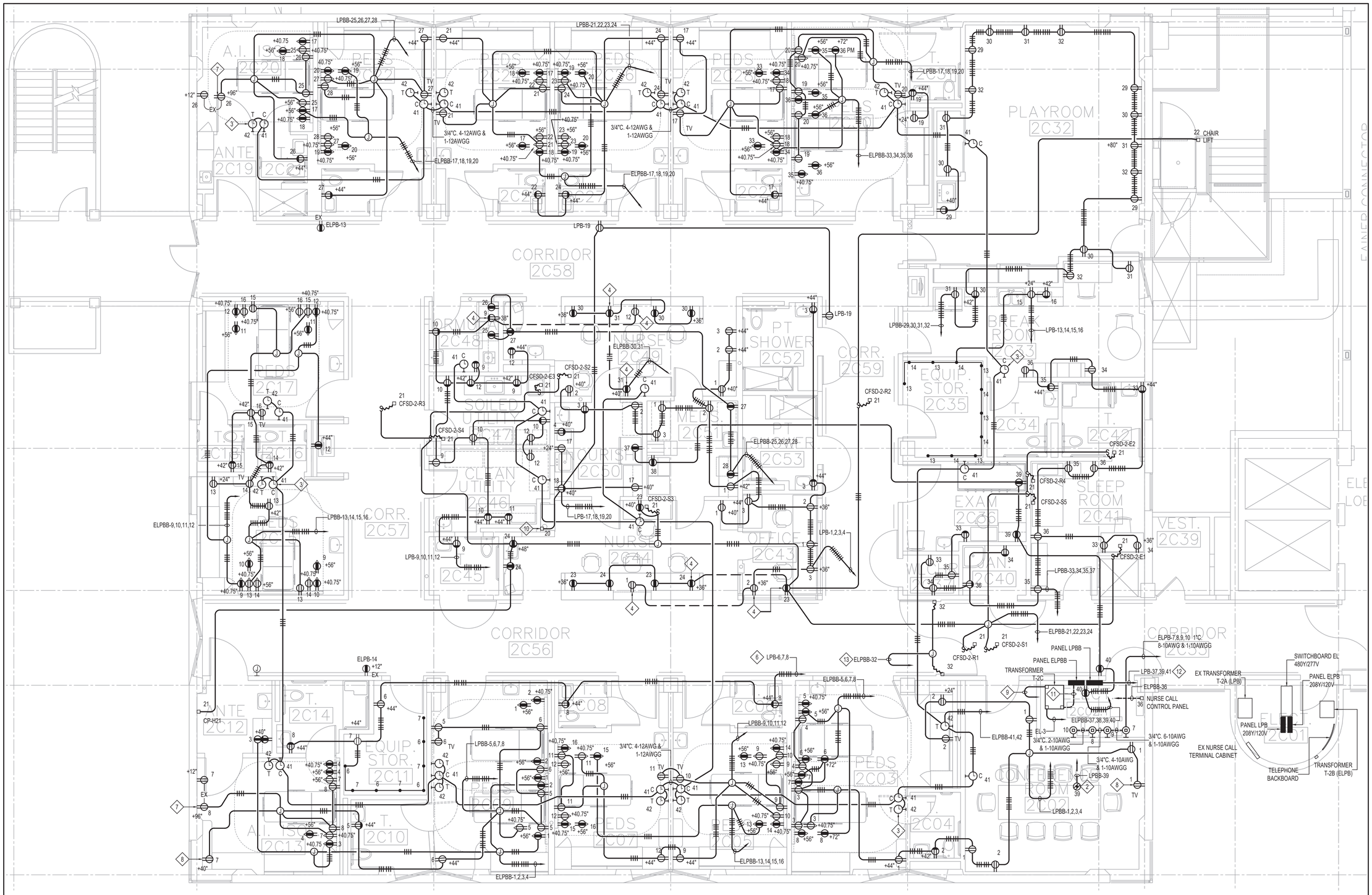

DRAWING NOTES

1. ALL ELECTRICAL WORK SHOWN IS NEW UON.
2. CORE DRILL OPENING FOR POKE THROUGH FLOOR BOX WITH POWER AND DATA. ROUTE CONDUIT ON UNDERSIDE OF SLAB AND CORE OPENING BELOW PANEL LPBA TO CONNECT POWER. REFER TO DRAWING E3.3 FOR DATA CONNECTIONS.
3. CENTER CLOCK OUTLETS TO LOCATE CENTER OF CLOCK MIDWAY BETWEEN TOP OF DOOR JAMB AND CEILING.
4. CORE DRILL OPENING FOR CONDUIT TO RECEPTACLE. PROVIDE JBOX DIRECTLY BENEATH EACH RECEPTACLE ON UNDERSIDE OF SLAB TO FACILITATE CONNECTION BETWEEN THE TWO RECEPTACLES. COORDINATE EXACT LOCATION OF OPENINGS WITH EXISTING 1ST FLOOR CEILING SPACE INSTALLATION.
5. PROVIDE CONDUIT AND CONDUCTORS AS REQUIRED BY THE MANUFACTURER OF THE LIFT FOR CONTROL CONNECTIONS DOWNSTREAM FROM ELPBB-22.
6. INTERCEPT EXISTING CONDUIT FORMERLY SERVING 2ND FLOOR CIRCUITS TO BE DEMOLISHED AND USE AS NEW PATHWAY FOR NEW CIRCUITS TO ENTER ELECTRICAL ROOM 2C01.
7. INTERCEPT EXISTING CONDUIT SERVING EXISTING FLUSH WALL OUTLET BOXES AND INSTALL NEW CONDUIT, CONDUCTORS, AND WIRING DEVICES AS INDICATED.
8. PROVIDE WIREMOLD V700 SERIES STEEL RACEWAY, OR EQUAL, FROM DATA OUTLET TO ACCESSIBLE CEILING SPACE ABOVE. PAINT RACEWAY TO MATCH EXISTING WALL.
9. PROVIDE 1/2"C. 1-8AWGG GROUNDING ELECTRODE CONDUCTOR FROM TRANSFORMER SECONDARY TO EXISTING GROUNDING ELECTRODE IN ELECTRICAL ROOM 2C01.
10. CONNECT CIRCUIT TO PNEUMATIC TUBE STATION, 120V, 3A. COORDINATE EXACT LOCATION WTH STATION SUPPLIER.
11. SECONDARY TRANSFORMER FEEDER TO PANEL ELPBB. SEE SINGLE LINE DIAGRAM FOR CONDUCTORS.
12. PANEL LPBB FEEDER. SEE SINGLE LINE DIAGRAM FOR CONDUCTORS.
13. INCLUDE AN OUTLET BOX IN THE HOMERUN, LOCATED DIRECTLY ABOVE PANEL ELPBB, TO FACILITATE FUTURE CONNECTION TO A LIFE SAFETY CIRCUIT WHEN IT IS AVAILABLE.

40 PARTIAL SECOND FLOOR POWER PLAN

SCALE 1/4" = 1' - 0"

VENTURA COUNTY HEALTH CARE AGENCY

PUBLIC WORKS VENTURA COUNTY

ENGINEERING SERVICES

RASMUSSEN & ASSOCIATES
Architecture
Planning
Interiors
21 S. California Street
Fourth Floor
Ventura, California 93001
(805) 648-1234

JOB No. 2027-00
IRJ ENGINEERS, INC.
MECHANICAL & ELECTRICAL ENGINEERS
4517 MARKET STREET, SUITE 1B VENTURA, CALIFORNIA 93003
(805) 642-2355

FOR PLAN REVIEW ONLY

PROFESSIONAL SEALS

LICENSED ARCHITECT JAY LOMAGNO C-20801 EXP. 2-31-2023 STATE OF CALIFORNIA

REGISTERED PROFESSIONAL ENGINEER JACK V. IVERSEN No. 12621 EXP. 9/22 ELECTRICAL STATE OF CALIFORNIA

PERMIT APPROVAL STAMP

REVIEWED IN ACCORDANCE WITH THE REQUIREMENTS OF T24, CCR
APPROVED
Department of Health Care Access and Information
FACILITIES DEVELOPMENT DIVISION
9/28/2022, 3:17:57 PM
H202495-56-00
Laura Baldrati

PERMIT NO HCAI #H202495-56-00

NO	REVISION	DATE
△		

PUBLIC WORKS PROJECT MANAGER

CONSULTANT PROJECT MANAGER
Jay Lomagno

DRAWN BY	CHECKED BY
CONSULTANT JOB NO A000495	DATE 06-15-2022

PROJECT TITLE AND ADDRESS

VENTURA COUNTY MEDICAL CENTER PEDIATRIC UNIT

300 HILLMONT AVE
VENTURA, CA 93003

COUNTY SPEC NUMBER
CP21-04

COUNTY PROJECT NUMBER
P6T20009

COUNTY DWG NO | SHEET 68 OF 89

SHEET TITLE
PARTIAL SECOND FLOOR POWER PLAN

SHEET NO
E3.2

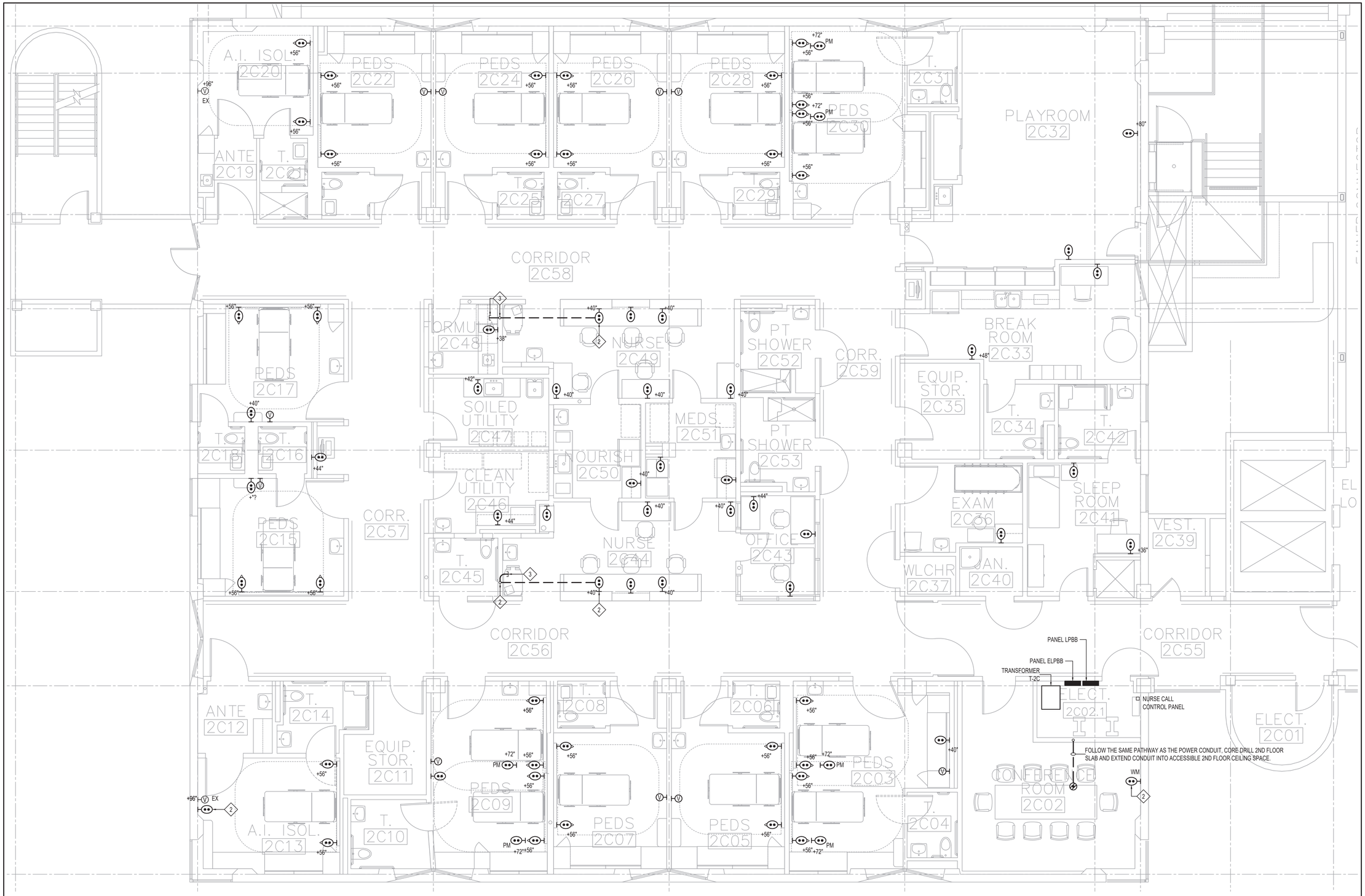

DRAWING NOTES

1. ALL ELECTRICAL WORK SHOWN IS NEW UON.
2. ROUTE WIREMOLD V700 SERIES STEEL RACEWAY, OR EQUAL, FROM DATA OUTLET TO ACCESSIBLE CEILING SPACE ABOVE. PAINT RACEWAY TO MATCH EXISTING WALL.
3. CORE DRILL FLOOR AND INSTALL NEW CONDUIT TO NURSE STATION DATA OUTLETS. STUB CONDUIT ABOVE CEILING OF ROOM 2C48 FOR DATA CABLE INSTALLATION.

40 PARTIAL SECOND FLOOR DATA AND CATV PLAN

SCALE 1/4" = 1' - 0"

4 2 0 8
3 1 4

N

1

Y202700BR.DWG 2022061B E2027-00B.DWG 6/15/2022 2:27PM IRJ ENGINEERS, INC.

VENTURA COUNTY
HEALTH CARE AGENCY

PUBLIC
VENTURA COUNTY
WORKS

ENGINEERING SERVICES

RASMUSSEN & ASSOCIATES
Architecture
Planning
Interiors

21 S. California Street
Fourth Floor
Ventura, California 93001
(805) 648-1234

JOB No. 2027-00
IRJ ENGINEERS, INC.
MECHANICAL & ELECTRICAL ENGINEERS
4517 MARKET STREET, SUITE 1B VENTURA, CALIFORNIA 93003
(805) 642-2355

FOR PLAN REVIEW ONLY

PROFESSIONAL SEALS

LICENSED ARCHITECT JAY LOMAGNO C-22080 12-31-22 STATE OF CALIFORNIA

REGISTERED PROFESSIONAL ENGINEER JACK V. IRJ No. 12022 ELECTRICAL STATE OF CALIFORNIA

PERMIT APPROVAL STAMP

REVIEWED IN ACCORDANCE WITH THE REQUIREMENTS OF T24, CCR
APPROVED
Department of Health Care Access and Information
FACILITIES DEVELOPMENT DIVISION
9/28/2022, 3:17:57 PM
H202495-56-00
Laura Baldrati

PERMIT NO HCAI #H202495-56-00

NO	REVISION	DATE
△		

PUBLIC WORKS PROJECT MANAGER

CONSULTANT PROJECT MANAGER
Jay Lomagno

DRAWN BY | CHECKED BY

CONSULTANT JOB NO A000495 | DATE 06-15-2022

PROJECT TITLE AND ADDRESS

VENTURA COUNTY MEDICAL CENTER PEDIATRIC UNIT

300 HILLMONT AVE
VENTURA, CA 93003

COUNTY SPEC NUMBER
CP21-04

COUNTY PROJECT NUMBER
P6T20009

COUNTY DWG NO | SHEET 69 OF 89

SHEET TITLE
PARTIAL SECOND FLOOR DATA AND CATV PLAN

SHEET NO
E3.3

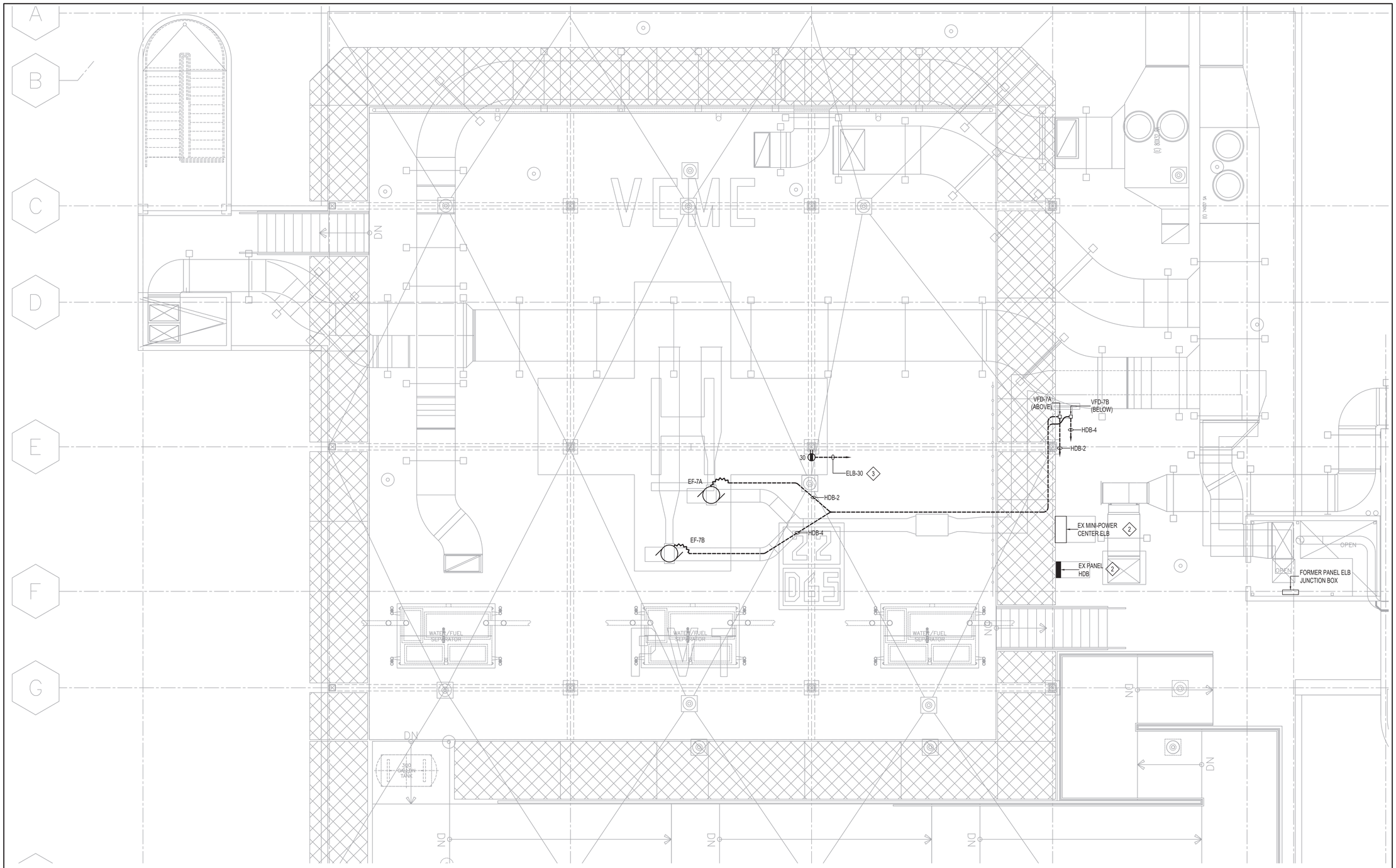

DRAWING NOTES

1. ALL ELECTRICAL WORK SHOWN IS NEW UON.
2. EQUIPMENT INSTALLED UNDER PERMIT NO OSHPD S210439-56-00.
3. CONNECT TO SPARE CIRCUIT BREAKER AT SPACE 30.

40 PARTIAL ROOF ELECTRICAL PLAN

SCALE 1/4" = 1' - 0"

4 2 0 8
3 1 4

1

N

VENTURA COUNTY HEALTH CARE AGENCY

PUBLIC VENTURA COUNTY WORKS

ENGINEERING SERVICES

RASMUSSEN & ASSOCIATES
Architecture
Planning
Interiors
21 S. California Street
Fourth Floor
Ventura, California 93001
(805) 648-1234

IRJ ENGINEERS, INC.
MECHANICAL & ELECTRICAL ENGINEERS
4517 MARKET STREET, SUITE 1B VENTURA, CALIFORNIA 93003
(805) 642-2355

JOB No. 2027-00

FOR PLAN REVIEW ONLY

PROFESSIONAL SEALS

LICENSED ARCHITECT JAY LOMAGNO C-20801 STATE OF CALIFORNIA

REGISTERED PROFESSIONAL ENGINEER JACK V. IVERS No. 12622 Exp. 9/23 ELECTRICAL STATE OF CALIFORNIA

PERMIT APPROVAL STAMP

REVIEWED IN ACCORDANCE WITH THE REQUIREMENTS OF T24, CCR
APPROVED
Department of Health Care Access and Information
FACILITIES DEVELOPMENT DIVISION
9/28/2022, 3:17:57 PM
H202495-56-00
Laura Baldrati

PERMIT NO HCAI #H202495-56-00

NO	REVISION	DATE
△		

PUBLIC WORKS PROJECT MANAGER

CONSULTANT PROJECT MANAGER
Jay Lomagno

DRAWN BY	CHECKED BY
CONSULTANT JOB NO A000495	DATE 06-15-2022

PROJECT TITLE AND ADDRESS

VENTURA COUNTY MEDICAL CENTER PEDIATRIC UNIT

300 HILLMONT AVE
VENTURA, CA 93003

COUNTY SPEC NUMBER
CP21-04

COUNTY PROJECT NUMBER
P6T20009

COUNTY DWG NO | SHEET 70 OF 89

SHEET TITLE
PARTIAL ROOF ELECTRICAL PLAN

SHEET NO
E3.4

Y2027008R.DWG 20220615 E2027-008.DWG 6/15/2022 2:27PM ©IRJ ENGINEERS, INC.

EXISTING ESSENTIAL BRANCH-CIRCUIT PANELBOARD ⟨5⟩
ELPB

SERVICE: 208Y/120V S/N 3P 4W	BUS: 100A	LOCATION: BLDG 304 2C01 ELEC RM
MAIN BREAKER: 100A 3P	FEEDER: SEE SINGLE LINE DIAGRAM	VER: A4
ENTER CAB'T AT: TOP	MOUNTING: SURFACE	MINIMUM AIC RATING: 10,000

CIRC	TRIP	POLE	REC	LTG	HP	LOAD	VOLT AMPS A	VOLT AMPS B	VOLT AMPS C	DESCRIPTION
1	20	1					0			SPARE
2	20	1		1		1	50			2C39
3	20	1						0		SPARE
4	20	1						0		SPARE
5	20	1							0	SPARE
6	20	1							0	SPARE
7	**30**	1	1				2400			**2C02.1 DATA RACK RECEPTACLE (PROVIDE NEW CB)**
8	**30**	1	1				2400			**2C02.1 DATA RACK RECEPTACLE (PROVIDE NEW CB)**
9	**30**	1	1					2400		**2C02.1 PHYSIO MON. RECEPTACLE (PROVIDE NEW CB)**
10	**30**	1	1					2400		**2C02.1 ACCESS CONTROL RECEPTACLE (PROVIDE CB)**
11	20	1							0	SPARE
12	20	1							0	SPARE
13	20	1	2			2	180			2C58
14	20	1					0			SPARE
15	20	1						0		SPARE
16	20	1						0		SPARE
17	20	1							0	SPARE
18	20	1							0	SPARE
19	20	1	2			2	360			2C01 TELEPHONE BOARD RECEPTACLES
20	40	3				2	360			PANEL ELPBA
21	20	1	6			2		1080		(ICU & TELEMETRY COMPUTERS THIRD FLOOR)
22	40	-				5		1460		PANEL ELPBA
23	20	1	6			2			1080	(TELEMETRY NURSES STATION) THIRD FLOOR
24	40	-				5			1176	PANEL ELPBA
25	20	1					0			SPARE
26	20	1					0			2C39 ISD IDF2 AC
27	20	1				5		0		SPARE
28	30	1				5		960		2C39 ISD IDF2 UPS
29	30	1	1			5			1920	2C39 IDF2 UPS
30	20	1	1			5			500	2C39 ISD IDF2 AUX

	A	B	C	TOTAL	
CONNECTED LOAD (VA)	5750	8300	4676	18726	69 MAX. PHASE AMPS
COMP. LOAD FACTOR (VA)	0	0	0	0	
COMPUTED LOAD (VA)	5750	8300	4676	18726	69 MAX. PHASE AMPS
CONT. LOAD FACTOR (VA)	58	0	0	58	
CONDUCTOR LOAD (VA)	5808	8300	4676	18784	69 MAX. PHASE AMPS

(37) PANEL ELPB SCHEDULE

EMERGENCY BRANCH CIRCUIT PANELBOARD ⟨2⟩
ELA

SERVICE: 480Y/277V S/N 3P 4W	BUS: 100A	LOCATION:1C01 1ST FLR ELEC ROOM
MAIN BREAKER: 100A	FEEDER: SEE SINGLE LINE DIAGRAM	VER: A3
ENTER CAB'T AT: BOTTOM	MOUNTING: SURFACE	MINIMUM AIC RATING: 14,000

CIRC	TRIP	POLE	REC	LTG	HP	LOAD	VOLT AMPS A	VOLT AMPS B	VOLT AMPS C	DESCRIPTION
1	20	1		35		1	2825			304 BASEMENT LIGHTS, EXIT SIGNS
2	20	1		25		1	1875			305 BASEMENT LIGHTS, EXIT SIGNS
3	20	1		33		1		2240		304 FIRST FLOOR LIGHTS, EXIT SIGNS
4	20	1		35		1		2075		305 FIRST FLOOR LIGHTS
5	20	1		31		1			2300	304 FIRST FLOOR LIGHTS
6	20	1		42		1			3000	304 SECOND FLOOR LIGHTS, EXIT SIGNS
7	20	1		13		1	1070			304 AMBULANCE ENTRANCE, 1C23
8	100	3					7528			PANEL "ELC"
9	20	1				1		1720		PARKING LOT LIGHTS
10	100	-						6782		PANEL "ELC"
11	20	1							0	304 CANOPY AND EGRESS LIGHTS
12	100	-							2936	PANEL "ELC"
13		1					0			SPACE
14	20	1		25		1	600			304 FIRST FLOOR LIGHTS ER, ER WAITING, TOILET ROOMS
15	20	1		15		1		270		304 FIRST FLOOR SOUTH ELEVATOR LOBBY
16	20	1		4		1		67		**304 SECOND FLOOR SOUTH ELEVATOR LOBBY**
17	20	1		15		1			270	304 FIRST FLOOR SOUTH ELEVATOR LOBBY
18	20	1		4		1			67	**304 SECOND FLOOR SOUTH ELEVATOR LOBBY**
19	20	1		32		1	1465			**304 SECOND FLOOR CENTRAL AREA LIGHTS**
20	20	1		4		1	200			**2C44,2C49**
21		1						0		SPACE
22		1						0		SPACE
23	20	1		56		1			2989	**2ND FLOOR SOUTH AND WEST EXTERIOR ROOM LIGHTS**
24	20	1		52		1			2670	**2ND FLOOR NORTHERN PERIMETER ROOMS LIGHTS**
25		1					0			SPACE
26	100	3					0			MAIN CIRCUIT BREAKER
27	20	1	17					890		FIRST FLOOR CORRIDOR AND EXTERIOR STAIR
28	100	-						0		MAIN CIRCUIT BREAKER
29	20	1	51						3150	304 FIRST FLOOR LIGHTS
30	100	-							0	MAIN CIRCUIT BREAKER

	A	B	C	TOTAL	
CONNECTED LOAD (VA)	15563	14044	17382	46989	63 MAX. PHASE AMPS
COMP. LOAD FACTOR (VA)	0	0	0	0	
COMPUTED LOAD (VA)	15563	14044	17382	46989	63 MAX. PHASE AMPS
CONT. LOAD FACTOR (VA)	3690	3289	3558	10536	
CONDUCTOR LOAD (VA)	19253	17333	20940	57525	76 MAX. PHASE AMPS

(39) PANEL ELA SCHEDULE

ESSENTIAL DISTRIBUTION PANELBOARD ⟨6⟩
HDB

SERVICE: 480Y/277V S/N 3P 4W	BUS: 100A	LOCATION: 304 ROOF
MAIN BREAKER: 100A	FEEDER: SEE SINGLE LINE DIAGRAM	VER: A7
ENTER CAB'T AT:	MOUNTING: SURFACE	MINIMUM AIC RATING: 30,000

CIRC	TRIP	POLE	HP	LOAD	VOLT AMPS A	VOLT AMPS B	VOLT AMPS C	DESCRIPTION
1	30	3	7 1/2	3	3048			EXHAUST FAN EF-2
				3		3048		EXHAUST FAN EF-2
				3			3048	EXHAUST FAN EF-2
2	20	3	3		1330			**NEW EXHAUST FAN EF-7A**
						1330		**NEW EXHAUST FAN EF-7A**
							1330	**NEW EXHAUST FAN EF-7A**
3	60	3			8491			PANEL ELB
						6750		PANEL ELB
							8164	PANEL ELB
4	20	3	3		1330			**NEW EXHAUST FAN EF-7B**
						1330		**NEW EXHAUST FAN EF-7B**
							1330	**NEW EXHAUST FAN EF-7B**
5					0			LOAD 5
						0		LOAD 5
							0	LOAD 5
6					0			LOAD 6
						0		LOAD 6
							0	LOAD 6
7					0			LOAD 7
						0		LOAD 7
							0	LOAD 7
8					0			LOAD 8
						0		LOAD 8
							0	LOAD 8

	A	B	C	TOTAL	
CONNECTED LOAD (VA)	14200	12459	13873	40532	51 MAX. PHASE AMPS
COMP. LOAD FACTOR (VA)	0	0	0	0	
COMPUTED LOAD (VA)	14200	12459	13873	40532	51 MAX. PHASE AMPS
CONT. LOAD FACTOR (VA)	960	1037	962	2959	
CONDUCTOR LOAD (VA)	15160	13496	14835	43491	55 MAX. PHASE AMPS

(40) PANEL HDB SCHEDULE

NEW CRITICAL BRANCH-CIRCUIT PANELBOARD
ELPBB

SERVICE: 208Y/120V S/N 3P 4W	BUS: 150A	LOCATION: ELECTRICAL 2C02.1
MAIN BREAKER: 150A 3P	FEEDER: SEE SINGLE LINE DIAGRAM	VER: A7
ENTER CAB'T AT: TOP	MOUNTING: SURFACE	MINIMUM AIC RATING: 10,000

CIRC	TRIP	POLE	REC	LTG	HP	LOAD	VOLT AMPS A	VOLT AMPS B	VOLT AMPS C	DESCRIPTION
1	20	1	3			2	540			2C09
2	20	1	3			2	540			2C09
3	20	1	3			2		540		2C13
4	20	1	3			2		540		2C13
5	20	1	2			2			360	2C03
6	20	1	2			2			360	2C03
7	20	1	2			2	360			2C03
8	20	1	2			2	360			2C03
9	20	1	2			2		360		2C15
10	20	1	2			2		360		2C15
11	20	1	2			2			360	2C17
12	20	1	3			2			540	2C17, 2C57
13	20	1	2			2	360			2C05
14	20	1	2			2	360			2C05
15	20	1	2			2		360		2C07
16	20	1	2			2		360		2C07
17	20	1	2			2			360	2C20
18	20	1	2			2			360	2C20
19	20	1	2			2	360			2C22
20	20	1	2			2	360			2C22
21	20	1				5		550		2ND FLOOR CFSD'S & 2C12 CONTROL PANEL CP-H21
22	20	1				3		600		NORTHEAST EXTERIOR CHAIR LIFT
23	20	1	4			2			720	2C43,2C44
24	20	1	4			2			720	2C44
25	20	1	1			4	852			2C48 FREEZER
26	20	1	1			4	492			2C48 REFRIGERATOR
27	20	1	2			2		360		2C49,2C51
28	20	1	1			4		240		2C51 REFRIGERATOR
29	20	1				5			500	2C02.1 NURSE CALL CONTROL PANEL
30	20	1	3			2			540	2C49
31	20	1	2			2	360			2C49
32	20	1				5	600			2C55/2C66 CROSS CORRIDOR POWER DOORS
33	20	1	2			2		360		2C28
34	20	1	2			2		360		2C28
35	20	1	3			2			540	2C30
36	20	1	4			2			720	2C30
37	20	1	1			4	492			2C50 REFRIGERATOR
38	20	1	1			5	600			2C51 PYXIS DISPENSER
39	20	1				2		360		2C36
40	20	1				2		360		2C02.1, 2C55
41	20	1				1			161	2ND FLOOR CLOCKS (20 @0.067A EACH)
42	20	1				1			419	2ND FLOOR CLOCK/TIMER (15@0.233A EACH)

	A	B	C	TOTAL	
CONNECTED LOAD (VA)	6636	5710	6660	19006	56 MAX. PHASE AMPS
COMP. LOAD FACTOR (VA)	-184	0	0	-184	
COMPUTED LOAD (VA)	6452	5710	6660	18823	56 MAX. PHASE AMPS
CONT. LOAD FACTOR (VA)	0	150	145	295	
CONDUCTOR LOAD (VA)	6452	5860	6805	19118	57 MAX. PHASE AMPS

(28) PANEL ELPBB SCHEDULE

EXISTING BRANCH-CIRCUIT PANELBOARD ⟨2⟩
LA

SERVICE: 480Y/277V S/N 3P 4W	BUS: 225A	LOCATION: 304 1C01 ELEC ROOM
MAIN BREAKER: 250A 3P N/A	FEEDER: SEE SINGLE LINE DIAGRAM	VER: A7
ENTER CAB'T AT: BOTTOM	MOUNTING: SURFACE	MINIMUM AIC RATING: 22,000A

CIRC	TRIP	POLE	REC	LTG	HP	LOAD	VOLT AMPS A	VOLT AMPS B	VOLT AMPS C	DESCRIPTION
1	20	1		21		1	2542			305 BASEMENT
2	20	1		31		1	2108			304 BASEMENT
3	20	1		31		1		2418		305 BASEMENT
4	20	1		**37**		**1**		**1081**		**2ND FLOOR GENERAL LIGHTING, NE EXTERIOR EXIT**
5	20	1		29		1			3433	305 FIRST FLOOR
6	20	1							0	SPARE
7	20	1		29		1	3000			305 FIRST FLOOR
8	20	1					0			SPARE
9	20	1						0		SPARE
10	20	1						0		SPARE
11	20	1							0	SPARE
12	20	1							0	SPARE
13	20	1					0			SPARE
14	100	3					5035			PANEL LC
15	20	1						0		SPARE
16	100	-						4195		PANEL LC
17	20	1							0	SPARE
18	100	-							4634	PANEL LC
19		1					0			SPACE
20	15	3			3	3	1330			AIR HANDLER AH-2
21		1						0		SPACE
22	15	-				3		1330		AIR HANDLER AH-2
23		1							0	SPACE
24	15	-				3			1330	AIR HANDLER AH-2
25		1					0			SPACE
26		1					0			SPACE
27		1						0		SPACE
28		1						0		SPACE
29		1							0	SPACE
30		1							0	SPACE
31		1					0			SPACE
32		1					0			SPACE
33		1						0		SPACE
34		1						0		SPACE
35		1							0	SPACE
36		1							0	SPACE
37	15	3			2		942			AIR HANDLER AH-1
38	90	3					19590			HEAT PUMP NUCLEAR MEDICINE ADMITTING
39	15	-						942		AIR HANDLER AH-1
40	90	-						19590		HEAT PUMP NUCLEAR MEDICINE ADMITTING
41	15	-							942	AIR HANDLER AH-1
42	90	-							18870	HEAT PUMP NUCLEAR MEDICINE ADMITTING

	A	B	C	TOTAL	
CONNECTED LOAD (VA)	34548	29557	29210	93314	125 MAX. PHASE AMPS
COMP. LOAD FACTOR (VA)	0	0	0	0	
COMPUTED LOAD (VA)	34548	29557	29210	93314	125 MAX. PHASE AMPS
CONT. LOAD FACTOR (VA)	3864	2616	2709	9189	
CONDUCTOR LOAD (VA)	38411	32173	31919	102503	139 MAX. PHASE AMPS

(30) PANEL LA SCHEDULE

EXISTING BRANCH-CIRCUIT PANELBOARD ⟨4⟩
LPB

SERVICE: 208Y/120V S/N 3P 4W	BUS: 225A	LOCATION: 304 2C01 ELECTRICAL ROOM
MAIN BREAKER: 225A 3P	FEEDER: SEE SINGLE LINE DIAGRAM	VER: A7
ENTER CAB'T AT: TOP	MOUNTING: SURFACE	MINIMUM AIC RATING: 10,000A

CIRC	TRIP	POLE	REC	LTG	HP	LOAD	VOLT AMPS A	VOLT AMPS B	VOLT AMPS C	DESCRIPTION
1	20	1	6			2	1080			2C43,2C44,2C50,2651
2	20	1	6			2	1080			2C43,2C49,2C50,2C51
3	20	1	6			2		1080		2C43,2C49,2C51,2C52,2C53
4	20	1	1			4		1596		2650 COFFEE MAKER
5	20	1							0	SPARE
6	20	1				2			900	2C11
7	20	1				2	900			2C11
8	20	1	3			2	540			2C06,2C08,2C14
9	20	1	5			2		900		2C45,2C46,2C47,2C48
10	20	1	5			2		900		2C46,2C47,2C48
11	20	1	1			4			840	2C46
12	20	1	5			2			900	2C46,2C47,2C49
13	20	1	6			2	1080			2C35
14	20	1	5			2	900			2C35
15	20	1				4		1200		2C33 MICROWAVE
16	20	1				4		1596		2C33 COFFEE MAKER
17	20	1	1			4			1200	2C50 MICROWAVE
18	20	1	1			4			780	2C50 ICE MAKER
19	20	1	3			2	540			2C50,2C58,2C59
20	20	1				5	360			2C50 PNEUMATIC TUBE STATION
21	20	1						0		SPARE
22	30	1						0		SPARE
23	20	1							1200	SPARE
24	20	1							0	SPARE
25	20	1					0			SPARE
26	20	1					0			SPARE
27	20	1						0		SPARE
28	20	1						0		SPARE
29	20	1							0	SPARE
30	20	1							0	SPARE
31	20	1					0			SPARE
32	20	1					0			SPARE
33								0		SPACE
34								0		SPACE
35									0	SPACE
36									0	SPACE
37	80	3					8460			PANEL LPBB
38							0			SPACE
39	80	-						7920		PANEL LPBB
40								0		SPACE
41	80	-							8280	PANEL LPBB
42									0	SPACE

	A	B	C	TOTAL	
CONNECTED LOAD (VA)	14940	15192	14100	44232	127 MAX. PHASE AMPS
COMP. LOAD FACTOR (VA)	-2290	-839	-322	-3451	
COMPUTED LOAD (VA)	12650	14353	13778	40781	120 MAX. PHASE AMPS
CONT. LOAD FACTOR (VA)	0	0	0	0	
CONDUCTOR LOAD (VA)	12650	14353	13778	40781	120 MAX. PHASE AMPS

(23) PANEL LPB SCHEDULE

ESSENTIAL MINI-POWER CENTER PANEL ⟨1⟩⟨1⟩
ELB

SERVICE: 208Y/120V S/N 3P 4W	BUS: 100A	LOCATION: 304 ROOF
MAIN BREAKER: 100A 3P	FEEDER: SEE ONE LINE DIAGRAM	VER: A7
ENTER CAB'T AT:	MOUNTING: SURFACE	MINIMUM AIC RATING: 10,000

CIRC	TRIP	POLE	REC	LTG	HP	LOAD	VOLT AMPS A	VOLT AMPS B	VOLT AMPS C	DESCRIPTION
1	20	1				1	96			PERIMETER LIGHTING
2	20	1				2	900			ELEVATOR MECH ROOM RECEPTACLES
3	20	1				1		150		OBSTRUCTION LIGHTING
4	20	1				1		200		LIGHTING CONTROL
5	20	1				1			150	WALKWAY LIGHTING
6	20	1			1/3	3			864	PENTHOUSE FAN
7	20	1				1	695			ELEVATOR LIGHTING
8	20	1				2	900			PERIMETER RECEPTACLES
9	20	1				1		650		ELEVATOR LIGHTING
10	20	1				1		100		LIGHTED WIND CONE
11	20	1				1			650	ELEVATOR LIGHTING
12	20	1				2			720	PERIMETER RECEPTACLES
13	20	1				5	100			HELIPORT CAMERA
14	20	1				5	200			MECHANICAL CONTROL CIRCUIT
15	20	1				5		50		ELEVATOR MACHINE ROOM DAMPER
16	30	2				5		2500		FUEL/WATER HEATER
17	20	1				5			600	HIGH OIL ALARM
18	30	-				5			2500	FUEL/WATER HEATER
19	20	1				5	600			HIGH OIL ALARM
20	30	2				5	2500			FUEL/WATER HEATER
21	20	1				5		600		HIGH OIL ALARM
22	30	-				5		2500		FUEL/WATER HEATER
23	20	1							0	SPARE
24	30	2				5			2500	FUEL/WATER HEATER
25	20	1					0			SPARE
26	30	-				5	2500			FUEL/WATER HEATER
27	20	1						0		SPARE
28	20	1						0		SPARE
29	20	1							0	SPARE
30	20	1	1			2			180	RECEPTACLE BELOW HELIPAD

	A	B	C	TOTAL	
CONNECTED LOAD (VA)	8491	6750	8164	23405	71 MAX. PHASE AMPS
COMP. LOAD FACTOR (VA)	0	0	0	0	
COMPUTED LOAD (VA)	8491	6750	8164	23405	71 MAX. PHASE AMPS
CONT. LOAD FACTOR (VA)	198	275	416	889	
CONDUCTOR LOAD (VA)	8689	7025	8580	24294	72 MAX. PHASE AMPS

(25) PANEL ELB SCHEDULE

NEW BRANCH-CIRCUIT PANELBOARD
LPBB

SERVICE: 208Y/120V S/N 3P 4W	BUS: 100A	LOCATION: ELECTRICAL 2C02.1
MAIN BREAKER: LUGS ONLY	FEEDER: SEE SINGLE LINE DIAGRAM	VER: A7
ENTER CAB'T AT: TOP	MOUNTING: SURFACE	MINIMUM AIC RATING: 10,000

CIRC	TRIP	POLE	REC	LTG	HP	LOAD	VOLT AMPS A	VOLT AMPS B	VOLT AMPS C	DESCRIPTION
1	20	1	5			2	900			2C02, 2C03
2	20	1	4			2	720			2C02, 2C03, 2C04
3	20	1	3			2		540		2C03
4	20	1	2			2		360		2C03
5	20	1	4			2			720	2C09,2C10
6	20	1	4			2			720	2C09
7	20	1	4			2	720			2C13
8	20	1	3			2	540			2C13
9	20	1	4			2		720		2C05
10	20	1	3			2		540		2C05
11	20	1	3			2			540	2C07
12	20	1	3			2			540	2C07
13	20	1	3			2	540			2C15
14	20	1	4			2	720			2C15, 2C16
15	20	1	4			2		720		2C17,2C18
16	20	1	3			2		540		2C17
17	20	1	4			2			720	2C28, 2C29
18	20	1	3			2			540	2C28
19	20	1	4			2	720			2C30, 2C31
20	20	1	4			2	720			2C30
21	20	1	4			2		720		2C24
22	20	1	3			2		540		2C24
23	20	1	3			2			540	2C26
24	20	1	4			2			720	2C26,2C27
25	20	1	3			2	540			2C20
26	20	1	4			2	720			2C20,2C21
27	20	1	5			2		900		2C22, 2C23
28	20	1	2			2		540		2C22
29	20	1	5			2			900	2C32,2C33
30	20	1	5			2			900	2C32,2C33
31	20	1	5			2	900			2C32,2C33
32	20	1	4			2	720			2C32,2C33
33	20	1	4			2		720		2C36,2C37,2C41,2C42
34	20	1	4			2		720		2C33,2C37,2C40,2C41
35	20	1	4			2			720	2C34,2C37,2C41
36	20	1	4			2			720	2C33,2C40,2C41
37	20	1					0			SPARE
38	20	1					0			SPARE
39	20	1	2			2		360		2C02
40		1						0		SPACE
41		1							0	SPACE
42		1							0	SPACE

	A	B	C	TOTAL	
CONNECTED LOAD (VA)	8460	7920	8280	24660	71 MAX. PHASE AMPS
COMP. LOAD FACTOR (VA)	0	0	0	0	
COMPUTED LOAD (VA)	8460	7920	8280	24660	71 MAX. PHASE AMPS
CONT. LOAD FACTOR (VA)	0	0	0	0	
CONDUCTOR LOAD (VA)	8460	7920	8280	24660	71 MAX. PHASE AMPS

(13) PANEL LPBB SCHEDULE

DRAWING NOTES

⟨1⟩ PANEL ELB IS PART OF A MINIPOWER CENTER WITH A 30KVA TRANSFORMER. THE MINI-POWER CENTER AND UPSTREAM DISTRIBUTION ARE ADEQUATE FOR THE NEW LOAD ADDED ON CIRCUIT 30. REFER TO PANEL SCHEDULE HDB

⟨2⟩ THE LOAD ON PANEL LA IS REDUCED APPROXIMATELY 9KVA AS A RESULT OF THE ADDITIONS AND DELETIONS INCLUDED AS PART OF THE WORK.

⟨3⟩ THE LOAD ON EXISTING PANEL ELA IS INCREASED APPROXIMATELY 9.8KVA AS A RESULT OF THE ADDITIONS AND DELETIONS INCLUDED AS PART OF THE WORK. PANEL ELA AND ITS UPSTREAM DISTRIBUTION, REFER TO DRAWING E0.2, ARE ADEQUATE FOR THE NEW LOADS. PROVIDE NEW 20A 1P CIRCUIT BREAKERS AT EXISTING SPACES 19,20,23, AND 24.

⟨4⟩ THE LOAD ON EXISTING PANEL LPB IS INCREASED APPROXIMATELY 11.8KVA AS A RESULT OF THE ADDITIONS AND DELETIONS INCLUDED AS PART OF THE WORK. PANEL LBP AND ITS UPSTREAM DISTRIBUTION, REFER TO DRAWING E0.2, ARE ADEQUATE FOR THE NEW LOADS. PROVIDE NEW 80A 3P CIRCUIT BREAKER TO SERVE PANEL LPBB AS SPACES INDICATED.

⟨5⟩ THE LOAD ON PANEL ELPB IS REDUCED APPROXIMATELY 22KVA AS A RESULT OF THE ADDITIONS AND DELETIONS INCLUDED AS PART OF THE WORK.

⟨6⟩ PANEL HDB INSTALLED UNDER PERMIT NO. OSHPD S210439-56-00. THE PANEL HAS CAPACITY FOR THE EXISTING LOADS, THE NEW LOADS ADDED TO CIRCUITS 2&4, ALONG WITH THE NEW RECEPTACLE ON PANEL ELB.

VENTURA COUNTY HEALTH CARE AGENCY

PUBLIC VENTURA COUNTY WORKS
ENGINEERING SERVICES

RASMUSSEN & ASSOCIATES
Architecture
Planning
Interiors
21 S. California Street
Fourth Floor
Ventura, California 93001
(805) 648-1234

IRJ ENGINEERS, INC. JOB No. 2027-00
MECHANICAL & ELECTRICAL ENGINEERS
4517 MARKET STREET, SUITE 1B VENTURA, CALIFORNIA 93003
(805) 642-2355

FOR PLAN REVIEW ONLY

PROFESSIONAL SEALS

LICENSED ARCHITECT JAY LOMAGNO C-20801 12-31-23 STATE OF CALIFORNIA

REGISTERED PROFESSIONAL ENGINEER JACK V. IVERS No. 12522 Exp. 9/23 ELECTRICAL STATE OF CALIFORNIA

PERMIT APPROVAL STAMP

REVIEWED IN ACCORDANCE WITH THE REQUIREMENTS OF T24, CCR
APPROVED
Department of Health Care Access and Information
FACILITIES DEVELOPMENT DIVISION
9/28/2022, 3:17:57 PM
H202495-56-00
Laura Baldrati

PERMIT NO HCAI #H202495-56-00

NO	REVISION	DATE
△		

PUBLIC WORKS PROJECT MANAGER	
CONSULTANT PROJECT MANAGER	Jay Lomagno
DRAWN BY	CHECKED BY
CONSULTANT JOB NO A000495	DATE 06-15-2022

PROJECT TITLE AND ADDRESS

VENTURA COUNTY MEDICAL CENTER PEDIATRIC UNIT

300 HILLMONT AVE
VENTURA, CA 93003

COUNTY SPEC NUMBER CP21-04

COUNTY PROJECT NUMBER P6T20009

COUNTY DWG NO | SHEET 71 OF 89

SHEET TITLE
NEW AND REVISED PANEL SCHEDULES

SHEET NO
E4.1

EXISTING ESSENTIAL BRANCH-CIRCUIT PANELBOARD
ELPB

SERVICE: 208Y/120V S/N 3P 4W | BUS: 100A | LOCATION: BLDG 304 2C01 ELEC RM
MAIN BREAKER: 100A 3P | FEEDER: SEE SINGLE LINE DIAGRAM | VER: A4
ENTER CAB'T AT: TOP | MOUNTING: SURFACE | MINIMUM AIC RATING: 10,000

CIRC	TRIP	POLE	REC	LTG	HP	LOAD	VOLT AMPS A	VOLT AMPS B	VOLT AMPS C	DESCRIPTION	
1	20	1					0			SPARE	
2	20	1		1		1	50			2C39	
3	20	1						0		SPARE	
4	20	1						0		SPARE	
5	20	1							0	SPARE	
6	20	1							0	SPARE	
7	**30**	1	1				2400			**2C02.1 DATA RACK RECEPTACLE (PROVIDE NEW CB)**	
8	**30**	1	1				2400			**2C02.1 DATA RACK RECEPTACLE (PROVIDE NEW CB)**	
9	**30**	1	1					2400		**2C02.1 PHYSIO MON. RECEPTACLE (PROVIDE NEW CB)**	
10	**30**	1	1					2400		**2C02.1 ACCESS CONTROL RECEPTACLE (PROVIDE CB)**	
11	20	1							0	SPARE	
12	20	1							0	SPARE	
13	20	1	2			2	180			2C58	
14	20	1					0			SPARE	
15	20	1						0		SPARE	
16	20	1						0		SPARE	
17	20	1							0	SPARE	
18	20	1							0	SPARE	
19	20	1	2			2	360			2C01 TELEPHONE BOARD RECEPTACLES	
20	40	3				2	360			PANEL ELPBA	
21	20	1	6			2		1080		(ICU & TELEMETRY COMPUTERS THIRD FLOOR)	
22	40	-				5		1460		PANEL ELPBA	
23	20	1	6			2			1080	(TELEMETRY NURSES STATION) THIRD FLOOR	
24	40	-				5			1176	PANEL ELPBA	
25	20	1					0			SPARE	
26	20	1					0			2C39 ISD IDF2 AC	
27	20	1				5		0		SPARE	
28	30	1				5		960		2C39 ISD IDF2 UPS	
29	30	1	1			5			1920	2C39 IDF2 UPS	
30	20	1	1			5			500	2C39 ISD IDF2 AUX	
CONNECTED LOAD (VA)							5750	8300	4676	18726	69 MAX. PHASE AMPS
COMP. LOAD FACTOR (VA)							0	0	0	0	
COMPUTED LOAD (VA)							5750	8300	4676	18726	69 MAX. PHASE AMPS
CONT. LOAD FACTOR (VA)							58	0	0	58	
CONDUCTOR LOAD (VA)							5808	8300	4676	18784	69 MAX. PHASE AMPS

38 PANEL ELPB SCHEDULE

EXISTING BRANCH-CIRCUIT PANELBOARD
LPB

SERVICE: 208Y/120V S/N 3P 4W | BUS: 225A | LOCATION: 304 2C01 ELECTRICAL ROOM
MAIN BREAKER: 225A 3P | FEEDER: SEE SINGLE LINE DIAGRAM | VER: A7
ENTER CAB'T AT: TOP | MOUNTING: SURFACE | MINIMUM AIC RATING: 10,000A

CIRC	TRIP	POLE	REC	LTG	HP	LOAD	VOLT AMPS A	VOLT AMPS B	VOLT AMPS C	DESCRIPTION	
1	20	1	6			2	1080			2C43,2C44,2C50,2651	
2	20	1	6			2	1080			2C43,2C49,2C50,2C51	
3	20	1	6			2		1080		2C43,2C49,2C51,2C52,2C53	
4	20	1	1			4		1596		2650 COFFEE MAKER	
5	20	1							0	SPARE	
6	20	1				2			900	2C11	
7	20	1				2	900			2C11	
8	20	1	3			2	540			2C06,2C08,2C14	
9	20	1	5			2		900		2C45,2C46,2C47,2C48	
10	20	1	5			2		900		2C46,2C47,2C48	
11	20	1	1			4			840	2C46	
12	20	1	5			2			900	2C46,2C47,2C49	
13	20	1	6			2	1080			2C35	
14	20	1	5			2	900			2C35	
15	20	1				4		1200		2C33 MICROWAVE	
16	20	1				4		1596		2C33 COFFEE MAKER	
17	20	1	1			4			1200	2C50 MICROWAVE	
18	20	1	1			4			780	2C50 ICE MAKER	
19	20	1	3			2	540			2C50,2C58,2C59	
20	20	1				5	360			2C50 PNEUMATIC TUBE STATION	
21	20	1						0		SPARE	
22	30	1						0		SPARE	
23	20	1							1200	SPARE	
24	20	1							0	SPARE	
25	20	1					0			SPARE	
26	20	1					0			SPARE	
27	20	1						0		SPARE	
28	20	1						0		SPARE	
29	20	1							0	SPARE	
30	20	1							0	SPARE	
31	20	1					0			SPARE	
32	20	1					0			SPARE	
33								0		SPACE	
34								0		SPACE	
35									0	SPACE	
36									0	SPACE	
37	80	3					8460			PANEL LPBB	
38							0			SPACE	
39	80	-						7920		PANEL LPBB	
40								0		SPACE	
41	80	-							8280	PANEL LPBB	
42									0	SPACE	
CONNECTED LOAD (VA)							14940	15192	14100	44232	127 MAX. PHASE AMPS
COMP. LOAD FACTOR (VA)							-2290	-839	-322	-3451	
COMPUTED LOAD (VA)							12650	14353	13778	40781	120 MAX. PHASE AMPS
CONT. LOAD FACTOR (VA)							0	0	0	0	
CONDUCTOR LOAD (VA)							12650	14353	13778	40781	120 MAX. PHASE AMPS

23 PANEL LPB SCHEDULE

EMERGENCY BRANCH CIRCUIT PANELBOARD
ELA

SERVICE: 480Y/277V S/N 3P 4W | BUS: 100A | LOCATION:1C01 1ST FLR ELEC ROOM
MAIN BREAKER: 100A | FEEDER: SEE SINGLE LINE DIAGRAM | VER: A3
ENTER CAB'T AT: BOTTOM | MOUNTING: SURFACE | MINIMUM AIC RATING: 14,000

CIRC	TRIP	POLE	REC	LTG	HP	LOAD	VOLT AMPS A	VOLT AMPS B	VOLT AMPS C	DESCRIPTION	
1	20	1		35		1	2825			304 BASEMENT LIGHTS, EXIT SIGNS	
2	20	1		25		1	1875			305 BASEMENT LIGHTS, EXIT SIGNS	
3	20	1		33		1		2240		304 FIRST FLOOR LIGHTS, EXIT SIGNS	
4	20	1		35		1		2075		305 FIRST FLOOR LIGHTS	
5	20	1		31		1			2300	304 FIRST FLOOR LIGHTS	
6	20	1		42		1			3000	304 SECOND FLOOR LIGHTS, EXIT SIGNS	
7	20	1		13		1	1070			304 AMBULANCE ENTRANCE, 1C23	
8	100	3					7528			PANEL "ELC"	
9	20	1				1		1720		PARKING LOT LIGHTS	
10	100	-						6782		PANEL "ELC"	
11	20	1							0	304 CANOPY AND EGRESS LIGHTS	
12	100	-							2936	PANEL "ELC"	
13		1					0			SPACE	
14	20	1		25		1	600			304 FIRST FLOOR LIGHTS ER, ER WAITING, TOILET ROOMS	
15	20	1		15		1		270		304 FIRST FLOOR SOUTH ELEVATOR LOBBY	
16	20	1		4		1		67		**304 SECOND FLOOR SOUTH ELEVATOR LOBBY**	
17	20	1		15		1			270	304 FIRST FLOOR SOUTH ELEVATOR LOBBY	
18	20	1		4		1			67	**304 SECOND FLOOR SOUTH ELEVATOR LOBBY**	
19	20	1		32		1	1465			**304 SECOND FLOOR CENTRAL AREA LIGHTS**	
20	20	1		4		1	200			**2C44,2C49**	
21		1						0		SPACE	
22		1						0		SPACE	
23	20	1		56		1			2989	**2ND FLOOR SOUTH AND WEST EXTERIOR ROOM LIGHTS**	
24	20	1		52		1			2670	**2ND FLOOR NORTHERN PERIMETER ROOMS LIGHTS**	
25		1					0			SPACE	
26	100	3					0			MAIN CIRCUIT BREAKER	
27	20	1	17					890		FIRST FLOOR CORRIDOR AND EXTERIOR STAIR	
28	100	-						0		MAIN CIRCUIT BREAKER	
29	20	1	51						3150	304 FIRST FLOOR LIGHTS	
30	100	-							0	MAIN CIRCUIT BREAKER	
CONNECTED LOAD (VA)							15563	14044	17382	46989	63 MAX. PHASE AMPS
COMP. LOAD FACTOR (VA)							0	0	0	0	
COMPUTED LOAD (VA)							15563	14044	17382	46989	63 MAX. PHASE AMPS
CONT. LOAD FACTOR (VA)							3690	3289	3558	10536	
CONDUCTOR LOAD (VA)							19253	17333	20940	57525	76 MAX. PHASE AMPS

40 PANEL ELA SCHEDULE

EXISTING BRANCH-CIRCUIT PANELBOARD
LA

SERVICE: 480Y/277V S/N 3P 4W | BUS: 225A | LOCATION: 304 1C01 ELEC ROOM
MAIN BREAKER: 250A 3P N/A | FEEDER: SEE SINGLE LINE DIAGRAM | VER: A7
ENTER CAB'T AT: BOTTOM | MOUNTING: SURFACE | MINIMUM AIC RATING: 22,000A

CIRC	TRIP	POLE	REC	LTG	HP	LOAD	VOLT AMPS A	VOLT AMPS B	VOLT AMPS C	DESCRIPTION	
1	20	1		21		1	2542			305 BASEMENT	
2	20	1		31		1	2108			304 BASEMENT	
3	20	1		31		1		2418		305 BASEMENT	
4	20	1		**37**		**1**		**1081**		**2ND FLOOR GENERAL LIGHTING, NE EXTERIOR EXIT**	
5	20	1		29		1			3433	305 FIRST FLOOR	
6	20	1							0	SPARE	
7	20	1		29		1	3000			305 FIRST FLOOR	
8	20	1					0			SPARE	
9	20	1						0		SPARE	
10	20	1						0		SPARE	
11	20	1							0	SPARE	
12	20	1							0	SPARE	
13	20	1					0			SPARE	
14	100	3					5035			PANEL LC	
15	20	1						0		SPARE	
16	100	-						4195		PANEL LC	
17	20	1							0	SPARE	
18	100	-							4634	PANEL LC	
19		1					0			SPACE	
20	15	3			3	3	1330			AIR HANDLER AH-2	
21		1						0		SPACE	
22	15	-				3		1330		AIR HANDLER AH-2	
23		1							0	SPACE	
24	15	-				3			1330	AIR HANDLER AH-2	
25		1					0			SPACE	
26		1					0			SPACE	
27		1						0		SPACE	
28		1						0		SPACE	
29		1							0	SPACE	
30		1							0	SPACE	
31		1					0			SPACE	
32		1					0			SPACE	
33		1						0		SPACE	
34		1						0		SPACE	
35		1							0	SPACE	
36		1							0	SPACE	
37	15	3			2		942			AIR HANDLER AH-1	
38	90	3					19590			HEAT PUMP NUCLEAR MEDICINE ADMITTING	
39	15	-						942		AIR HANDLER AH-1	
40	90	-						19590		HEAT PUMP NUCLEAR MEDICINE ADMITTING	
41	15	-							942	AIR HANDLER AH-1	
42	90	-							18870	HEAT PUMP NUCLEAR MEDICINE ADMITTING	
CONNECTED LOAD (VA)							34548	29557	29210	93314	125 MAX. PHASE AMPS
COMP. LOAD FACTOR (VA)							0	0	0	0	
COMPUTED LOAD (VA)							34548	29557	29210	93314	125 MAX. PHASE AMPS
CONT. LOAD FACTOR (VA)							3864	2616	2709	9189	
CONDUCTOR LOAD (VA)							38411	32173	31919	102503	139 MAX. PHASE AMPS

30 PANEL LA SCHEDULE

DRAWING NOTES

1. REFER TO REVISED PANEL SCHEDULES ON DRAWING E4.1 TO SEE PANEL SCHEDULE CONDITIONS AFTER THE WORK SHOWN ON THE ELECTRICAL DRAWINGS IS INSTALLED.

2. THE EXISTING PANEL SCHEDULES ARE SHOWN TO REFLECT THE CONDITIONS ON THIS PROJECT BEFORE THE DEMOLITION WORK AND NEW WORK IS PERFORMED.

VENTURA COUNTY
HEALTH CARE AGENCY

PUBLIC
VENTURA COUNTY
WORKS
ENGINEERING SERVICES

RASMUSSEN & ASSOCIATES
Architecture
Planning
Interiors
21 S.California Street
Fourth Floor
Ventura, California 93001
(805) 648-1234

JOB No. 2027-00
IRJ ENGINEERS, INC.
MECHANICAL & ELECTRICAL ENGINEERS
4517 MARKET STREET, SUITE 16 VENTURA, CALIFORNIA 93003
(805) 642-2355

FOR PLAN REVIEW ONLY

PROFESSIONAL SEALS

LICENSED ARCHITECT JAY LOMAGNO C-20801 REN. 12-31-23 STATE OF CALIFORNIA

REGISTERED PROFESSIONAL ENGINEER JACK V. IVERS No. 12522 Exp. 9/23 ELECTRICAL STATE OF CALIFORNIA

PERMIT APPROVAL STAMP

REVIEWED IN ACCORDANCE WITH THE REQUIREMENTS OF T24, CCR
APPROVED
Department of Health Care Access and Information
FACILITIES DEVELOPMENT DIVISION
9/28/2022, 3:17:57 PM
H202495-56-00
Laura Baldrati

PERMIT NO HCAI #H202495-56-00

NO	REVISION	DATE
△		

PUBLIC WORKS PROJECT MANAGER

CONSULTANT PROJECT MANAGER: Jay Lomagno

DRAWN BY | CHECKED BY

CONSULTANT JOB NO: A000495 | DATE: 06-15-2022

PROJECT TITLE AND ADDRESS

VENTURA COUNTY MEDICAL CENTER PEDIATRIC UNIT

300 HILLMONT AVE
VENTURA, CA 93003

COUNTY SPEC NUMBER: CP21-04

COUNTY PROJECT NUMBER: P6T20009

COUNTY DWG NO | SHEET 72 OF 89

SHEET TITLE: EXISTING PANEL SCHEDULES

SHEET NO: E4.2

DIVISION 26
ELECTRICAL SPECIFICATIONS

I GENERAL

1.01 All work and materials shall be in accordance with all applicable codes, including the 2019 California Electrical Code and governing authorities. Nothing in the plans or specifications shall be deemed as permission to violate these codes or authorities. General and special conditions apply to work of this division.

1.02 All materials shall be new and shall be listed and labeled or labeled only by a Nationally Recognized Testing Laboratory. All material shall also comply with the following standards:

A. National Electrical Manufacturers Association
B. American National Standards Institute
C. Institute of Electrical and Electronics Engineers

1.03 Submit for approval searchable PDF file copies of shop drawings for all new electrical equipment including panelboards, circuit breakers, boxes, conduits, conductors, luminaires, and wiring devices. Similar materials shall be the products of a single manufacturer. The luminaire submittal shall include descriptive data provided by the manufacturer of the LED drivers. Scanned images are not acceptable for the PDF files.

1.04 Provide for submitting to OSHPD scaled mounting details and seismic anchoring calculations prepared and signed by Structural Engineer registered in the State of California for each piece of wall or floor mounted distribution equipment whose dimensions or weights or anchorage requirements vary from those shown on Drawings and anchorage schedules.

1.05 Maintain a set of full sized record drawing bond prints with all changes indicated in red ink. On these systematically and accurately keep an up-to-date and legible dimensional record of all work installed differently from the location or manner indicated, as well as exact conduit routing, locations of stub-outs, and hidden or underground features. Locate dimensionally to permanent points of reference. Submit the record documents in PDF format to Engineer for review. Mark specifications to identify equipment installed.

1.06 All work, materials, and equipment provided and/or installed under this section of the specification shall be warranted for a period of twelve months from date of acceptance of work by the Owner. The word "provide" means to furnish, install, and electrically connect as part of the work of this division.

1.07 Examine all existing conditions as applicable. Become acquainted with Specifications and Drawings for all portions of the Project. Notify Owner's Representative (before bidding if possible) of any apparent discrepancies between the Specifications and Drawings for different parts of the Work or of any inconsistencies between the Specifications and Drawings and the existing conditions. Obtain and follow Owner's Representative's instructions.

1.08 Work shall include but not necessarily be limited to the following:

A. Provide new branch-circuit panelboards, mounting, and accessories.
B. Provide new luminaire and wiring device installation as shown on the Drawings.
C. Connect new roof-mounted HVAC equipment and wiring devices as shown on the Drawings.
D. Provide new wiring device installation on the roof as shown on the Drawings.
E. Grounding of equipment as indicated or required for electrical systems.
F. All cutting, excavation, core drilling, patching, and restoration of disturbed surfaces required in conjunction with electrical work.
G. Conduit sleeves, metal frames, galvanized channel support systems, and backing required for installation of electrical conduits, luminaires, devices, and equipment.
H. Prime and finish painting of all exposed electrical surfaces, conduits, boxes, and supports to match adjacent surfaces under another Division of the Work.

1.09 Rough-In

A. Verify all electrical rough-ins required for each new device or piece of equipment to be connected as part of this work.

1.10 Electrical Installations

A. Verify all dimensions by field measurements. The Drawings serve as working drawings only, indicating diagrammatically the general layout of the systems and their various components and equipment. Existing conduit routing, conductor quantities, and circuiting shown on the Drawings are based on record drawings provided by Agency. Where interceptions or extensions of existing conduits are indicated, Contractor shall field verify exact routing of existing conduits. Provide quantity and type of new conductors to match existing conductors unless noted otherwise on the Drawings.
B. Coordinate the installation of required supporting devices and sleeves with all existing building features and systems and to facilitate maintenance, repair, and replacement of components.
C. Coordinate the installation of new and relocated electrical materials and equipment with existing and new conduits, pipes, support systems, equipment, and building components, to provide for efficient flow of work.
D. Comply with NECA 1-2010 Good Workmanship in Electrical Contracting.

1.11 Interruption of Electrical Systems

A. All required shutdowns or interruptions of electrical systems shall be coordinated with the Owner. Shutdowns considered to be "critical" by the Owner shall be performed only during the hours from 12:00 midnight to 4:00 A.M. with a maximum down time not to exceed four (4) hours. Shutdowns considered non-critical may be performed during normal working hours unless noted otherwise.
B. At the time of any interruption or cut-off, have all required materials and labor readily available so that the work can be completed without delay and within the approved schedule. Include all required temporary services to maintain power systems to areas where systems cannot be interrupted at any time.
C. All shutdowns and system interruptions shall have Owner's approval 72 hours in advance with regard to date, time, and duration.

1.12 Grounding

A. Execute grounding of equipment in compliance with applicable codes, governing authorities, and drawings.
B. Make all connections with approved solderless, bolted fasteners unless otherwise noted. Sheet metals straps are prohibited.

1.13 Cutting and Patching

A. Do all miscellaneous cutting, drilling, and patching necessary and normally required at the time of actually installing this work. Patching shall be of the same materials, workmanship, grade, and finish as the original or surrounding work to the complete satisfaction of the Owner. Do not cut structural framing, walls, floors, and other members intended to withstand stress, except with written authorization. Authorization will be granted only where there is no other reasonable method for completing electrical work and where proposed cutting clearly does not affect the structures in any way.
B. Penetrations through fire rated walls, floors, and ceilings shall be sealed and firestopped with Underwriters Laboratories, State Fire Marshal, and Factory Mutual approved sealant.
C. Core Drilling Concrete: Where authorized, cut openings for conduit penetrations and similar services through concrete or masonry walls by core drilling. Do not cut by hammer-driven chisel or drill. Locate structural steel on both sides of concrete and masonry elements using ground penetrating radar prior to drilling. Reinforcing steel shall not be cut. Penetrations through masonry walls shall be located to provide a maximum of one opening per concrete masonry unit.
D. All costs required to accomplish cutting, repairing, patching, and sealing of new work in existing areas to accommodate the electrical shall be paid for by the Electrical Contractor at no increase in contract cost.

1.14 Marking

A. In general, and except as modified by details or elsewhere herein, before requesting the Engineer to make final observation, identify all electrical distribution equipment, circuit breakers, and other equipment by means of neat, approved labels, decals, brass tags, engraved plastic laminate or metal strips, neatly painted signs or by other approved means. Provide manufacturer's standard vinyl-cloth self-adhesive cable/conductor markers of wrap-around type, either pre-numbered plastic coated type or write-on type with clear plastic self-adhesive cover flap, numbered to show circuit identification. Where nameplates are indicated, provide engraving stock plastic laminate, complying with FS L-P-387, in sizes and thicknesses indicated, engraved with engraver's standard letter style of sizes and wording indicated, black face and white core plies (letter color) for normal electrical systems, red face and white core plies for emergency electrical systems. Provide thickness of 1/16", except as otherwise indicated. Punch plastic laminate for mechanical fastening and provide stainless steel rivets or self-tapping stainless steel screws.

1.15 Tests

A. Perform all electrical tests as required or as directed including tests indicated by the installation instructions provided with the equipment supplied. Submit test results for inclusion in the operation and maintenance manuals. Provide all materials, labor, and equipment necessary for performance of these tests. At completion of the work perform a complete "in-service" operation of the entire electrical power and control systems added or modified as part of this work, to show compliance with the Drawings and Specifications. Replace any work showing faults under test without additional cost to the Owner.
B. Conductor tests: Perform insulation resistance test on each complete circuit prior to energizing. Insulation resistance between conductors and between each conductor and ground shall not be less than 25 megohms. Repair or replace wires or cables in circuits and repeat the test. Before energization, test cable and wire for continuity of circuitry and for short circuits. Correct malfunctions when detected, at no additional cost to Agency.

1.16 Demolition

A. Contractor shall visit the job site prior to submitting a bid to determine the scope of the demolition Work, and to become familiar with the existing conditions that will affect his work and therefore his bid.
B. Owner shall have first right of refusal of all salvageable materials removed from the building. Materials not claimed by the Owner shall become the property of the Contractor, and shall be removed from the site by the Contractor.
C. Areas vacated by equipment shall be left in neat and safe condition.
D. Maintain circuit continuity to equipment, devices, luminaires, and all special systems that will remain active. Remove all existing abandoned electrical conduits, junction boxes, supports, and wiring back to panels or switchboards, except where it will affect existing equipment that will remain.
E. Perform all work required for relocation and extension of luminaires, conduits, outlets, etc. to clear the area of demolition and for the remodel. Revise existing panel directories to clearly indicate loads and areas served after remodel. Provide new typed directory card when five or more circuits are changed.
F. Where existing switches, receptacles, luminaires, junction boxes, equipment, etc. are not to be reused, remove and patch the opening.
G. All switches and circuit breakers that become spares as a result of the demolition or remodel Work shall be labeled "spare." No wires shall remain connected to them. The switches or circuit breakers shall be left in the "off" position.

II PRODUCTS AND MATERIALS

260519 Conductors

A. Conductors shall be 600-volt, soft drawn copper. Conductors shall have type THHN/THWN insulation. 8 AWG and larger shall be stranded. 10 AWG and smaller shall be solid or stranded.
B. Conductors shall not be smaller than 12 AWG unless otherwise noted.
C. All conductors shall be installed in conduit as indicated on plans.
D. Identify all new conductors in existing panelboards, circuit breakers, pullboxes, junction boxes, and outlet boxes.
E. Provide 1/8-inch diameter dimensioned polyethylene pullrope in each empty conduit.
F. Comply with CEC and the following for color-coding of conductors. Color-code all secondary service, feeder, and branch circuit conductors. 208-volt system neutrals shall be white. All other system neutrals shall be white with an identifiable color stripe. 208 volt ungrounded conductors for phase A, phase B, and phase C shall be black, red, and blue respectively. 480 volt ungrounded conductors for phase A, phase B, and phase C shall be brown, orange, and yellow, respectively. The color coding for conductors 6 AWG and smaller shall be continuous along the entire length.
G. Provide electrical insulating tape, heat-shrinkable insulating tubing and boots, solder, electrical soldering flux, wire nuts, and cable ties as recommended for use by accessories manufacturers for type services indicated. Splices in wet locations shall be suitable and listed for continuous operation under water.

260526 Grounding

A. General: Except as otherwise indicated, provide electrical grounding systems indicated, with assembly of materials including, but not limited to, cables/wires, connectors, terminals (solderless lugs), grounding buses in distribution equipment and panelboards, and additional accessories needed for complete installation. Where more than one type unit meets indicated requirements, selection is Installer's option. Where materials or components are not indicated, provide products complying with CEC, IEEE, and established industry standards for applications indicated.
B. Conductors: Unless otherwise indicated, provide electrical grounding conductors for grounding connections matching power supply wiring materials and sized according to CEC.
C. Electrical Grounding Connection Accessories: Provide electrical insulating tape, heat-shrinkable insulating tubing, welding materials, and bonding straps, as recommended by accessories manufacturers for type of service indicated.
D. Field Welding: Comply with AWS Code for procedures, appearance, and quality of welds and for methods used in correcting welding work. Provide welded connections where grounding conductors connect to underground grounding rods/electrodes.

260533 Conduit

A. All conduits shall be UL listed and labeled.
B. Material:
1. Electrical Metallic Tubing (EMT): Electrical metallic tubing shall be galvanized steel with a corrosion resistant inner coating and shall be produced in accordance with UL Safety Standard #797 and ANSI C80.3.
2. Flexible Metal Conduit: Flexible metal conduit shall be steel and shall be constructed of single strip, flexible continuous, interlocked, and double-wrapped steel. Conduit shall be galvanized inside and outside. Aluminum conduit shall not be used.
3. Liquid-Tight Flexible Metal Conduit: Liquid-tight flexible metal conduit shall be steel and shall be constructed of single strip, flexible, continuous, interlocked, and double-wrapped steel. Conduit shall be galvanized inside and outside. Coat with liquid-tight jacket of flexible thermoplastic. Conduit shall include a copper ground in sizes through 1-1/4". Aluminum conduit shall not be used.
4. Armored Cable: Armored cable shall be hospital-grade, 600V rated, 12-AWG solid copper THHN insulated conductors, moisture resistant fire retardant paper wrap, interlocking galvanized steel strip jacket, maximum 90-degree C temperature rating in dry locations, and a minimum 16-AWG bond wire integral with the steel jacket. All runs shall include a 12-AWG copper ground conductor with green insulation. Color coding for hot conductors shall match that for conductors installed in conduit. Provide quantity of conductors indicated on the Drawings.
5. Rigid Steel Conduit: Rigid steel conduit shall be hot dip galvanized steel manufactured in accordance with UL Safety Standard #6 and ANSI C 80.1.
6. Surface Mulitoutlet Raceway: Provide steel multioutlet raceway with tamper-resistant single receptacles at 30" on center for the length of raceway and quantity of devices shown on the Drawings including all accessories, connectors, and mounting provisions. Raceway and devices shall be ivory in color. Raceway shall be pre-wired with 12AWG conductors. Provide Legrand Wiremold Series 2000 or equal.
7. Fittings: All locknuts for metallic conduits shall be galvanized or zinc plated steel. Insulating bushings shall be high impact thermoplastic. Fittings used outdoors or in other wet locations shall be UL listed for wet location. Fittings for rigid steel conduit shall be threaded. Fittings for burial in concrete shall be UL listed as concrete tight. Fittings for EMT shall be compression or set screw type zinc plated steel or zinc die cast.
C. Conduit usage:
1. Install rigid steel conduit underground, under slab, in contact with earth, embedded in concrete, in masonry walls, where subject to mechanical damage, where exposed on the exterior, or exposed on the interior below four feet above the floor.
2. Install electrical metallic tubing in places where rigid or flexible conduit is not required, such as stud walls, ceiling spaces, and exposed areas on the interior over four feet above the floor.
3. Install flexible steel conduit for final connection to motors or other vibrating equipment and where indicated on the Drawings. It may also be used in other locations where, due to structural conditions, EMT or rigid conduit cannot be used. This use will be allowed only if approved by the Owner's Representative. Lengths of flexible steel conduit shall not exceed six feet in any path to ground.
4. Install liquid-tight flexible conduit and fittings for final connection in wet, damp, or outdoor areas to motors or other vibrating equipment, where subjected to dripping oil, and where indicated on the Drawings.
5. Armored cable may be installed in branch-circuit runs on the normal system. It shall not be used for any emergency system circuits. Final connections at panelboards shall be made with EMT.
D. Conduit installation:
1. Field bends in conduit shall be workmanlike and smooth and shall not materially reduce the internal diameter of the conduit. Bends shall not be made at joints.
2. Keep conduit interior clean and clear.
3. Provide secure mounting facilities for all conduits. Factory made strap of the one-hole galvanized malleable iron or two-hole galvanized steel clamp type shall be used. Wire or plumber's tape shall not be used for hanging conduits.
4. Provide junction or pull boxes in addition to those shown on the Drawings, where required for pulling conductors due to excessive number of bends or to length of conduit runs. Coordinate locations of pull boxes with all existing building features and equipment.
5. Reroute conduit where necessary to clear structural and mechanical obstructions. All rerouting shall be approved by the Engineer prior to installation.
6. Ends of conduit shall be cut square and reamed to remove any burrs and sharp edges. Conduit terminations at panelboards and boxes shall be provided with locknuts and bushings.
7. Prime and finish paint all exposed conduits to match adjacent surfaces.
8. Existing conduits, in accessible or inaccessible ceiling spaces where the ceiling is opened as part of this work, shall be supported from the structure in compliance with this specification and with the seismic requirements of the State of California. Existing conduits include those conduits that are not directly affected by the work of this project.

260534 Outlet and Junction Boxes

A. Concealed outlet boxes: Provide UL listed and labeled galvanized flat rolled sheet steel interior outlet boxes of types, shapes, number of gangs, sizes, and depths to suit each location, number and AWG of wires passing through or terminating within, and wiring devices installed but in no case less than 4" square by 1-1/2" deep unless specifically noted as smaller on the Drawings. Telephone, data, or communication outlet boxes shall be minimum 2-1/8" deep. Boxes shall have stamped knockouts in back and sides and shall have threaded screw holes with corrosion resistant screens for securing wiring devices and box covers. Boxes installed within masonry or concrete walls shall be type approved for that application.
B. Exposed outlet boxes: Provide corrosion-resistant cast metal outlet boxes of types, number of gangs, shapes, and sizes including depth of boxes, to suit each respective location and installation. Construct with threaded rigid hubs of the quantity and size required at each location, and with threaded screw holes with corrosion-resistant screws for securing box covers and wiring devices. Provide boxes of proper code size for the number of and types of devices installed and number and AWG of wires passing through or terminating therein, but in no case less than 4-9/32" high by 2-3/4" wide by 2-5/8" deep, unless specifically noted as smaller on the Drawings.
C. Exposed Outlet Box Accessories: Provide outlet box accessories as required for each installation that are compatible with outlet boxes being used and fulfilling requirements of individual wiring situations. Provide cast metal covers either blank or with the proper configuration for the devices installed at each location. Exposed outlet boxes in damp or wet locations shall be provided with cast metal faceplates with in-use covers suitably configured for each application and device installed, including faceplate gaskets and corrosion-resistant fasteners.
D. Flush floor poke-through: Provide UL listed flush floor poke-through with 2 hour fire rating, threaded conduit entries, four 120V, 15-amp, 2-pole, 3-wire, specification grade single receptacles, four data openings for keystone style communication jacks, 6" diameter top plate, threaded coin cover, and stainless steel finish. Coordinate depth with the existing slab thickness at the location shown on the Drawings. Unit shall have fiberglass divider plate to separate the 120V power section from the data section. Coordinate cored opening with existing features in the first floor ceiling space. Poke-through shall be MOI series as manufactured by Lew Electric or equal.
E. Coordinate outlet box requirements with the manufacturer of the device to be installed.
F. Outlet boxes shall be as manufactured by Appleton, Bell, Bowers, Crouse-Hinds, O-Z Gedney Co., Red Dot, Steel City/Midland-Ross Corp., or RACO, Inc.
G. Install boxes and conduit bodies in locations, which ensure ready accessibility of electrical wiring.
H. Fasten boxes rigidly to substrates and structural surfaces or solidly embed electrical boxes in concrete or masonry.
I. In existing areas where ceilings are to be replaced, outlet, junction, and pull boxes that are to remain above the ceilings shall be supported and seismically braced from the structure above.
J. Outlet boxes on the essential electrical system shall be identified with the letter 'E', applied using a permanent marker.
K. Provide steel partition between switches in common outlet boxes when fed from separate normal and emergency voltage systems.
L. Provide galvanized code gage sheet steel junction and pull boxes larger than 50 cu. In., with screw-on covers, of types, shapes, and sizes to suit each respective location and installation, with welded seams and equipped with stainless steel nuts, bolts, screws, and washers. Furnish in prime coat. Finish paint all exposed junction and pull boxes in finished areas and on exterior of building to match adjacent surfaces or a color directed by Architect. Finish painting is covered under painting section. Provide engraved nameplate on each pull box and junction box identified with a specific name on the Drawings.
M. Coordinate outlet box requirements with the manufacturer of the device to be installed.
N. Available Manufacturers: Subject to compliance with requirements, manufacturers offering junction and pull boxes that may be incorporated in the work include, but are not limited to, Circle A-W, Cross, Hammond, or equal.

260920 Panelboards

A. General: Provide new panelboards, enclosures, and ancillary components of types, sizes, and ratings indicated, which comply with manufacturer's standard materials, design, and construction according to published product information. Equip with number of unit panelboard devices as required for complete installation. Where types, sizes, or ratings are not indicated, comply with CEC, UL, and established industry standards for applications indicated.
B. Provide dead front safety type lighting and appliance panelboards as indicated, with switching and protective devices in quantities, ratings, types, and arrangements shown, with anti-burn solderless pressure type lug connectors approved for copper conductors. Equip with tin-plated copper bus bars, full-sized neutral bar, with bolt-in type heavy duty, quick make, quick break, circuit breakers as indicated on schedules. Provide suitable lugs on neutral bus for each outgoing feeder required. Provide bare copper uninsulated grounding bar suitable for bolting to enclosure. Circuit breakers shall be thermomagnetic with minimum AIC as indicated on the Drawings. Circuit breakers serving mechanical equipment shall be HACR rated. Branch circuits feeding motors, appliances, and signal and control systems shall have provisions for padlocking the breaker in the open or closed position.
C. Panelboards on the emergency system shall be provided with an integral surge protective device within the panel enclosure. The surge protective device shall have an 80kA surge rating, 10 modes of protection, maximum continuous overvoltage (MCOV) rating of 150V and voltage protection rating of 700V L-N & L-G, 1000V L-L, and 600V N-G.
D. Nameplate: Provide nameplates on new and existing panels to match the designation as indicated on the Drawings.
E. Panelboard Enclosures: Panelboards shall have flush or surface mounted trims with one door to access the interior and a second door to access the panelboard wireway. The front shall not be hinged to the box. Both doors shall be lockable and keyed alike. Provide galvanized sheet steel cabinet type enclosures, in sizes and NEMA types indicated, code gauge, minimum 16 gauge thickness. Construct with blank endplates and wiring gutters. The wiring gutters shall be sufficient to accommodate the conductor sizes shown on the Drawings. Provide doors with flush locks and keys, all panelboard enclosures keyed alike, with concealed door hinges and door swings as indicated. All panelboards shall be equipped with interior circuit directory metal frame cardholder and card with clear plastic covering containing neatly typewritten schedule and mounted on the inside of the door. Provide permanent circuit numbers for each space where an overcurrent device can be installed. Provide baked gray enamel finish over a rust inhibitor. Provide enclosures fabricated by same manufacturer as panelboards, which mate properly with panelboards to be enclosed. Enclosures shall be minimum 20" wide by 5-3/4" deep with height as required.
F. Panelboard Accessories: Provide panelboard accessories and devices including, but not necessarily limited to, circuit breakers, ground fault protection units, etc., as recommended by panelboard manufacturer for ratings and applications indicated.
G. Seismic certification: Certify panelboards to meet all applicable seismic requirements of the California Building Code for Seismic Zone 4 application. Submit guidelines for the installation consistent with these requirements prepared by the panelboard manufacturer and based upon testing of representative equipment.
H. Provide panels as manufactured by Siemens P1 (OSP-0078), Schneider NQOD (OSP-0016), or equal.

260926 Modification to Existing Panelboards

A. Circuit breakers: New circuit protective devices shall match existing manufacturer and have same short circuit rating. New molded case thermal magnetic circuit breakers shall have toggle handles that indicate when breaker is tripped. Multiple pole breakers shall have common trip so overload on one pole will trip all poles simultaneously. Provide padlockable lock-offs on each new circuit breaker. Circuit breakers shall be automatic with an interrupter and trip element for each pole, all enclosed in a molded plastic case. The operating mechanism shall provide quick-make, quick-break, trip free contact action. The operating handle of the circuit breaker shall open and close all poles of a multi-pole breaker simultaneously. Each breaker shall have a thermal magnetic trip unit for each pole, consisting of a thermal element for time-delayed overload protection and a magnetic element for short circuit protection. Individual single pole breakers with tie bars will not be acceptable. The breakers shall have a visible trip indication. Units shall be of the size shown on the Drawings and shall meet NEMA and/or UL specifications. Make modifications and additions to feeders and distribution branch circuits as indicated on Drawings.

262213 Transformers

A. Subject to compliance with requirements, provide products as manufactured by Schneider, Siemens, Eaton, or equal.
B. Provide factory-assembled, general purpose, ventilated self-cooled, dry type distribution transformers where shown, of sizes, characteristics, and rated capacities indicated, three-phase, 60 hertz, maximum of 5% impedance, with 480 volt, 10 kV BIL primaries, and 208Y/120 volt, 4 wires, 10 kV BIL secondaries with grounded neutral. Provide 50 degree C rise, 220 degree C insulation class. Transformer shall be capable of continuous operation at rated kVA at ambient temperatures not exceeding 40 degree C. Provide primary windings with six full capacity taps: two 2-1/2% increments above nominal rated voltage and four 2-1/2% increments below nominal rated voltage for deenergized tap changing operation. Sound levels shall not exceed maximum level rating of 45dB for 15kVA through 50kVA. Certify transformer to meet all applicable seismic requirements of the California Building Code for Seismic Zone 4 application. Submit guidelines for the installation consistent with these requirements prepared by the transformer manufacturer and based upon testing of representative equipment.
C. Transformer cores shall be constructed of high grade, non-aging silicon steel with high densities shall be kept substantially below core saturation point. Clamp core laminations throughout length of core to maintain proper pressure. Visibly ground the core of the transformer to the enclosure by a flexible metal grounding strap. Coils shall be continuous wound construction using electrical grade aluminum. The completed core and coil shall be bolted to the enclosure base and isolated from the base by means of rubber vibration-absorbing mounts. Provide terminal enclosure with bolted cover to accommodate primary and secondary coil wiring connections and electrical supply raceway terminal connector. Provide terminal board for crimp type connectors. Limit wiring compartment temperature rise to 35 degree C when transformer is operating continuously at rated load in a 40 degree C ambient. Transformer enclosures shall be constructed of heavy gauge, sheet steel. The enclosures shall be degreased and cleaned, then painted by electrostatic deposition of a polymer polyester powder coating and baked. The coating color shall be ANSI 49.
D. Perform factory production tests including applied and induced potential tests, no load losses tests, and polarity/phase relation tests. Install transformers as indicated, in accordance with manufacturer's written instructions, applicable requirements of CEC, NEMA, ANSI, and IEEE standards, and recognized industry practices to ensure that products fulfill requirements. Provide reinforced concrete equipment pads. Comply with manufacturer's indicated installation method. Seismic restraints and anchorage for transformers shall comply with the requirements of California Administrative Code Title 24. All accessible mechanical and electrical connections shall be checked for tightness with calibrated torque wrench using manufacturer's minimum acceptable values.
E. Upon completion of installation of transformers, energize primary circuit at rated voltage and frequency from normal power source and measure primary circuit and secondary voltages for proper tap settings. Perform insulation-resistance tests winding-to-winding and each winding-to-ground with minimum 1000 Vdc for one minute. Compare with manufacturer's test data. Record values and include in Operating and Maintenance instructions. When requested by Engineer, perform sound level measurements to demonstrate audible sound levels are in compliance with requirements. Where possible, correct malfunctioning units at the site, then retest to demonstrate compliance; otherwise, remove and replace with new units and proceed with retesting.

262726 Wiring Devices

A. Provide factory-fabricated wiring devices in types, colors, and electrical ratings for applications indicated and complying with NEMA Standards Publication No. WD 1. Where types and grades are not indicated, provide proper selection as determined by Installer to fulfill wiring requirements and complying with CEC and NEMA standards for wiring devices.
B. Receptacles:
1. Provide tamper-resistant, duplex convenience outlets, three-wire, NEMA 5-15R or 5-20R, hospital grade, 125-volt, parallel slot, polarized where indicated. Devices shall have nylon face, thermoplastic body, brass strap, triple wipe brass line contacts, brass ground contacts, shall prevent energization of a device unless an object is inserted in both blade openings simultaneously, and devices shall be UL listed as Hospital Grade. Devices shall be ivory for normal circuits and red for essential electrical system circuits. Devices shall be Hubbell HBL8200SGXA or Leviton 8200SG for 15 ampere and Hubbell HBL8300SGXA or Leviton 8300SG, for 20 ampere.
2. Provide 20-ampere, 125-volt receptacle when indicated on the Drawings and/or where only one (1) duplex receptacle is provided on a separate 20-ampere, 120-volt circuit, or where the item of equipment to be connected requires a 20-ampere receptacle.
3. Provide tamper-resistant, weather-resistant, duplex, ground-fault-circuit-interrupter (GFCI) receptacles, three-wire, NEMA 5-15 R or 5-20 R, 125-volt, parallel slot, polarized where indicated, in ivory color for normal system circuits and red color for essential electrical system circuits. GFCI receptacles shall be 20A feed-through type, capable of protecting connected downstream receptacles on single circuit, grounding type UL-rated Class A, 60 Hz, with solid state ground fault sensing and signaling, with 4-6 milliamperes ground fault trip level, shall prevent energization of a device unless an object is inserted in both blade openings simultaneously, marked as weather resistant, and UL listed as Hospital Grade. Devices shall be Hubbell GF8200SG or Leviton GFWT1-HG for 15 ampere and Hubbell GF8300SG or Leviton GFWT2-HG for 20 ampere, or equal.
C. Switches
1. Snap: Provide toggle switches, 20 ampere, 120/277 volt AC, quiet type with steel mounting strap insulated from mechanism. Equip with plaster ears, nylon or lexan switch handle, and back and side wired screw terminals. Switch shall include a steel grounding clip that shall automatically provide grounding continuity between the metal strap and a grounded metal wall box. Flush or surface mount per the Drawings.
2. Provide line voltage specification grade lighting circuit switches at locations indicated on the Drawings. Handles shall be ivory for normal circuits and red for essential electrical circuits. Single pole switches shall be Hubbell HBL 1221, Leviton 1221-2, or equal. Three-way switches shall be Hubbell HBL 1223, Leviton 1223-2, or equal.
3. Dimmers: Provide 120/277VAC push-button style dimming wall station with 0-10V low voltage dimming signal compatible with LED drivers and rated for 1200W at 277V. Dimmer shall have an ivory face with matching integral faceplate and be suitable for mounting on a standard plaster ring. Provide Sensor Switch model sPODMRD-IV or equal.
4. Wireless Dimmers: Provide 120/277VAC, single-pole, wireless line-powered push-button style dimming wall station that communicates with associated luminaires via radio frequency and shall provide on/off/dimming for controlled dimmable luminaires. Buttons shall be engraved with function for ease of use. Device and faceplate shall be ivory in color. Provide Acuity Brands model RPODLA-DX-MVOLT-IV or equal.
5. Patient Room Low Voltage Multifunction Switches: Provide switches capable of controlling up to five luminaire groups within a patient room including individual on/off/dimming for each. Switches shall be compatible with the patient room over-the-bed luminaires and receive low voltage power from a master control unit mounted within the luminaire housing. Switches shall have a durable mylar overlay compatible with patient room infection control measures. Dimming shall be provided by a 0-10V signal for use with LED drivers. Provide Amico LightMaster series or equal.
6. Occupancy Sensors: Provide 120/277VAC passive infrared wall switch sensor for on-off control of lights based on occupancy. Sensor shall be compatible with LED lamps and have vandal resistant lens, LED indication of occupancy detection, 1200W at 277V rating, and ivory face color. Sensor shall be able to return to automatic on light control after lights are turned off manually. Provide Wattstopper model PW-301-I-277VAC or equal.
7. Verify correctness or door swings and locates switches on the latch side of the door swing.
8. Where switches are located in damp or wet locations, provide spring-loaded covers of types suitable for type of box installed. Covers shall be by Bryant, Hubbell, Leviton, or equal.
D. Faceplates
1. Provide single switch and duplex outlet faceplates, of types, sizes, and with ganging and cutouts as indicated. Provide faceplates possessing the following additional construction features:
Material and Finish:
a. Nylon (thermoplastic) with color to match associated wiring device.
b. Die cast aluminum covers with self closing, gasketed doors in damp and wet locations. Receptacle covers shall maintain integrity of weather proof enclosure when in use.
2. Engraved lettering shall be provided on plates for the following:
a. Emergency receptacles indicating panel and circuit number.
b. All receptacles other than standard 120-volt duplex convenience outlets shall be engraved with the voltage and phase (i.e., single phase or three phase).
c. Momentary contact lighting switches.
d. Nylon faceplates shall have polyester tape labels applied. Labels shall be white with black letters.

265000 Luminaires

A. Provide new luminaires of sizes, types, ratings and manufacturer, complete with, but not necessarily limited to, housings, light source, reflectors, lenses, louvers, LED drivers, and wiring as specified on the Drawings. Provide LED array with 3500K color output or as specified on the Drawings.
B. Install luminaires at locations and heights as indicated, complying with manufacturer's written instructions, applicable requirements of CEC, NECA'S "Standard of Installation", NEMA standards, and recognized industry practices to ensure that products fulfill requirements.
C. Coordinate with other electrical work and work of all other Divisions as necessary for proper interface.
D. Fasten luminaires securely to indicated structural support, and check to ensure that pendant luminaires are plumb.
E. Wire luminaires with conductors suitable for the voltage, current, temperature, and environment to which the conductors will be subjected.
F. Clean luminaires in areas of this phase of the work of dirt and debris and replace burned-out lamps before final acceptance of the installation.
G. Protect installed luminaires from damage during construction period.
H. Upon completion of installation of luminaires and after building circuitry has been energized, apply electrical energy to demonstrate capability and compliance with requirements. Where possible, correct malfunctioning units at site, then retest to demonstrate compliance. Otherwise, remove and replace with new units, and proceed with retesting.
I. Replace defective and burned-out lamps before Substantial Completion.
J. Replace burned-out lamps in existing luminaires that are relocated, reinstalled, and reconnected as part of the work of this Division.
K. Provide tight equipment grounding connections for each luminaire installation.

III EXECUTION

3.01 Completion data

A. Submit completion data to the Engineer and Owner in acceptable quantity and form before requesting a final inspection. Such submittal shall be corrected, amended, or completed before final acceptance of the work.
B. Include: warranties; record drawings and data; test results; manufacturer's installation, operating, and maintenance instructions; certifications by manufacturers as required; approvals by other authorities where specified or where required by the general, special, or supplementary general conditions.

3.02 Manufacturer's directions: Follow manufacturer's directions and recommendations in all cases where the manufacturers of articles used for this work furnish directions covering points not shown or specified.

3.03 Mounting: Provide all materials and accessories necessary to properly mount and secure equipment furnished and/or installed under the electrical work. The items requiring mounting include, but are not limited to, conduits, outlets, junction boxes, pull boxes, etc. Mounting shall comply with the 2019 edition of Title 24, Part 2, California Building Code and the 2016 edition of ASCE 7 Chapter 13.

3.04 Flush mounted panels, loadcenters, and terminal cabinets shall have a minimum of three 3/4"CO stubbed into accessible ceiling space, in addition to the conduits indicated on the Drawings.

3.05 Cleaning: During construction and upon completion of the work, remove from the entire site all debris and excess materials, tools, etc., resulting from this work. Clean all equipment provided or modified as part of this work, including luminaires, free from dust, dirt, grease, paint, etc.

3.06 Concrete Anchors and Inserts

A. Concrete and masonry expansion type anchors shall be equal to Hilti KWIK BOLT TZ Wedge anchors. Allowable shear and tension values in pounds for each anchor shall comply with latest issue of ICC-ES Report No. ESR-1917. Provide anchors of diameter and minimum embedment as required by loads.
B. Expansion type anchors shall be proof load tested per requirements of the State of California.

3.07 Obtain all required permits; Owner will pay for permits, inspections, and examinations.

3.08 Heating, Ventilating, Air Conditioning, and Plumbing - Electrical Installation

A. Furnish and/or install equipment for the heating, ventilating, air conditioning, and plumbing Work as follows:
1. Furnish and install:
a. Complete line voltage conduit and wiring system.
b. Line voltage circuit protection devices.
c. Line voltage switches for control of small motors, where indicated on the Drawings.
d. Line voltage disconnect switches as required. Refer to Heating, Ventilating, Air Conditioning, and Plumbing Specifications for disconnects furnished with equipment.
e. Motor starters and combination motor starter and disconnect switches, except where furnished with the equipment controlled.
2. Install equipment furnished under other sections of the specifications:
a. Line voltage control equipment and disconnect switches, H.O.A. switches, time switches control transformers, relays, thermostats, etc., which are not installed as part of motor control centers.
B. The Heating, Ventilating, Air Conditioning, and Plumbing Sections will furnish and/or install electrical equipment for those systems as follows:
1. Furnish and install:
a. Motors
b. Low voltage control devices
c. Low voltage transformers
d. Conduit and wire for electronic systems (except line voltage)
e. All electrical Work under items b. through e. above shall be performed under Division 16 or by the control manufacturer but shall be paid for and coordinated under heating, ventilating, air conditioning, and/or plumbing Work.
2. Furnish only:
a. Motor Starters, combination starters, variable frequency drives, and disconnects, and disconnect switches that are furnished with equipment controlled.
b. Line voltage control equipment.

(40) ELECTRICAL SPECIFICATIONS

VENTURA COUNTY HEALTH CARE AGENCY

PUBLIC VENTURA COUNTY WORKS
ENGINEERING SERVICES

RASMUSSEN & ASSOCIATES
Architecture
Planning
Interiors
21 S. California Street
Fourth Floor
Ventura, California 93001
(805) 648-1234

JOB No. 2027-00
IRJ ENGINEERS, INC.
MECHANICAL & ELECTRICAL ENGINEERS
4517 MARKET STREET, SUITE 16 VENTURA, CALIFORNIA 93003
(805) 642-2355

FOR PLAN REVIEW ONLY

PROFESSIONAL SEALS

LICENSED ARCHITECT · JAY LOMAGNO · C-20801 · REN. 12-31-23 · STATE OF CALIFORNIA

REGISTERED PROFESSIONAL ENGINEER · JACK V. IVERS · No. 12522 · Exp. 9/23 · ELECTRICAL · STATE OF CALIFORNIA

PERMIT APPROVAL STAMP

REVIEWED IN ACCORDANCE WITH THE REQUIREMENTS OF T24, CCR
APPROVED
Department of Health Care Access and Information
FACILITIES DEVELOPMENT DIVISION
9/28/2022, 3:17:57 PM
H202495-56-00
Laura Baldrati

PERMIT NO HCAI #H202495-56-00

NO	REVISION	DATE
△		

PUBLIC WORKS PROJECT MANAGER
CONSULTANT PROJECT MANAGER: Jay Lomagno
DRAWN BY | CHECKED BY
CONSULTANT JOB NO: A000495 | DATE: 06-15-2022
PROJECT TITLE AND ADDRESS

VENTURA COUNTY MEDICAL CENTER PEDIATRIC UNIT

300 HILLMONT AVE
VENTURA, CA 93003

COUNTY SPEC NUMBER: CP21-04
COUNTY PROJECT NUMBER: P6T20009
COUNTY DWG NO | SHEET 73 OF 89
SHEET TITLE: ELECTRICAL SPECIFICATIONS
SHEET NO: E5.1

Johnson Controls

VENTURA COUNTY MEDICAL CENTER
PEDIATRIC UNIT
FIRE ALARM SYSTEM

VENTURA COUNTY HEALTH CARE AGENCY

PUBLIC WORKS VENTURA COUNTY

ENGINEERING SERVICES

RASMUSSEN & ASSOCIATES
Architecture
Planning
Interiors
21 S. California Street
Fourth Floor
Ventura, California 93001
(805) 648-1234

LEGENDS

FIRE ALARM SYMBOL LEGEND

QTY	SYMBOL	DESCRIPTION	BRAND	MODEL	BACKBOX	WIRE TYPE	CSFM #
INITIATING DEVICES							
32	S	ADDRESSABLE PHOTOELECTRIC SMOKE SENSOR W/ STANDARD BASE	SIMPLEX	4098-9714 HEAD 4098-9792 BASE	4" OCT, 1-1/2" D	M	7272-0026:0218 7300-0026:0217
3	(heat)	ADDRESSABLE STANDARD HEAT SENSOR W/ STANDARD BASE	SIMPLEX	4098-9733 HEAD 4098-9792 BASE	4" OCT, 1-1/2" D	M	7270-0026:0216 7300-0026:0217
4	S R	ADDRESSABLE PHOTOELECTRIC SMOKE SENSOR W/ 2-WIRE RELAY BASE	SIMPLEX	4098-9714 HEAD 4098-9780 BASE	4" OCT, 1-1/2" D W/ 1-1/2" EXT RING	M	7272-0026:0218 7300-0026:0217
		SUPERVISED RELAY	SIMPLEX	4098-9860	MOUNTS IN BASE BOX	R	
2	F	ADDRESSABLE NO GRIP SINGLE ACTION MANUAL PULL STATION	SIMPLEX	4099-9021	4" SQ, 2-1/8" D W/ SINGLE GANG COVER	M	7150-0026:0224
MODULES AND RELAYS							
2	AOM SIG	ADDRESSABLE SIGNAL ZAM	SIMPLEX	4090-9007	4" SQ. 2-1/8" D W/ 1-1/2" EXT RING	M V	7300-0026:0319
4	AOM	DUAL RELAY IAM	SIMPLEX	4090-9008	4" SQ. 2-1/8" D W/ DBL. GANG COVER	M R	7300-0026:0311
3	AIM	INDIVIDUAL ADDRESSABLE MODULE	SIMPLEX	4090-9001	SINGLE GANG 2-1/2" D W/COVER	M Z	7300-0026:0223
4	R	TRACK MOUNTED SINGLE RELAY SPDT W/ ENCLOSURE, APOLLO AMERICA INC MR-101/C	SIMPLEX	2088-9008	TRACK MOUNTED	R	7300-1004:0101
NOTIFICATION APPLIANCES							
5	#W # C	CONVENTIONAL MULTI-CANDELA SPEAKER/STROBE ,CEILING MOUNT, WHITE, CLEAR LENS, FIRE	SIMPLEX	4906-9154	4" SQ. 1-1/2" D W/ 1-1/2" EXT RING	S V	7320-0026:0247
1	#W #	CONVENTIONAL MULTI-CANDELA SPEAKER/STROBE ,WALL MOUNT, WHITE, CLEAR LENS, FIRE	SIMPLEX	4906-9153	4" SQ. 1-1/2" D W/ 1-1/2" EXT RING	S V	7320-0026:0247
3	# WP	CONVENTIONAL MULTI-CANDELA WEATHERPROOF STROBE ,WALL MOUNT, RED, CLEAR LENS, FIRE	SIMPLEX	4906-9105	49WPBB-AVVOWR	V	
3	#	CONVENTIONAL MULTI-CANDELA STROBE ,CEILING MOUNT, WHITE, CLEAR LENS, FIRE	SIMPLEX	4906-9104	SINGLE GANG 2-1/2" D	V	7125-0026:316
3	#	CONVENTIONAL MULTI-CANDELA STROBE ,WALL MOUNT, WHITE, CLEAR LENS, FIRE	SIMPLEX	4906-9103	SINGLE GANG 1-1/2" D	V	7125-0026:316
2	NS	CONVENTIONAL MULTI-CANDELA CHIME/STROBE ,WALL MOUNT, RED, CLEAR LENS, FIRE	SIMPLEX	4906-9133	4905-9829	V	7135-0026:0335
MISCELLANEOUS DEVICES							
	JB	JUNCTION BOX	BY OTHERS	BY OTHERS			
	S	FIRE/SMOKE DAMPER	BY OTHERS	BY OTHERS			
	Z	DOME LIGHT WALL MOUNT	BY OTHERS	BY OTHERS			
	10K	END-OF-LINE RESISTOR 10K (EOL)	SIMPLEX	4081-9008			

FIRE ALARM WIRE LEGEND

	CIRCUIT DESCRIPTION	CONSTRUCTION	GAUGE	CIRCUIT PROPERTIES	FPLR	FPLP	THHN	TFFN	OUTDOOR **	C.I.
K	REMOTE TEST SWITCH/LED	(2) 2 COND. SOLID	14 AWG		X	X				
L	REMOTE LED	2 COND. SOLID	14 AWG		X	X				
M	IDNET	UTP SOLID	18 AWG	60µF MAX TOTAL LINE CAPACITANCE	X	X				
R	RELAY	2 COND. SOLID	14 AWG		X	X	X	X		
S	AUDIO - SPEAKER	UTP SOLID	18 AWG	30pf/ft. MAX CAPACITANCE RECOMMENDED	X	X				
V	VISUAL	2 COND. SOLID	12 AWG		X	X				
Z	ZONE CIRCUIT	2 COND. SOLID	14 AWG		X	X	X	X		

(FPLR through C.I. = ACCEPTABLE CABLE TYPES)

CONDUIT SIZE	MAX CONDUCTOR AREA	CONDUIT SIZE	MAX CONDUCTOR AREA
1/2"	0.122 SQ. INCH*	1-1/4"	0.598 SQ INCH*
3/4"	0.213 SQ INCH*	1-1/2"	0.814 SQ INCH*
1"	0.346 SQ INCH*	2"	1.342 SQ INCH*

* 40% CONDUIT FILL PER C.E.C. STP = SHIELDED TWISTED PAIR

ITEMS SUCH AS CAPACITANCE BETWEEN CONDUCTORS AND WIRE GAUGE CAN BE CRUCIAL TO THE CIRCUIT DESIGN OF THIS SYSTEM INSTALLATION. THE INSTALLING CONTRACTOR IS RESPONSIBLE FOR SELECTING AND INSTALLING CABLE MANUFACTURER AND MODEL THAT MEETS OR EXCEEDS THE ABOVE REQUIREMENTS. RECOMMENDED CABLE MANUFACTURERS AND MODEL NUMBERS ARE AVAILABLE UPON REQUEST.

FIRE STOP METHODS

FLOOR OR WALL ASSEMBLY

System No. C-AJ-1473
F Rating —2 Hr
T Rating —2 Hr
L Rating at Ambient —2 CFM/sq ft
L Rating at 400°F —Less than 1 CFM/sq ft
W Rating —Class 1 (See Item 3)

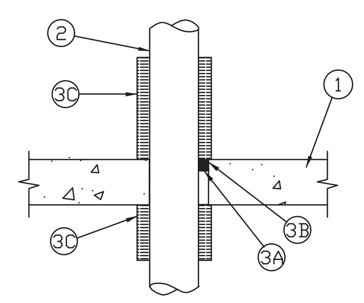

1. FLOOR OR WALL ASSEMBLY — MIN 4-1/2 IN. (114 MM) THICK REINFORCED LIGHTWEIGHT OR NORMAL WEIGHT (100-150 PCF OR 1600-2400 KG/M3) CONCRETE. WALL MAY ALSO BE CONSTRUCTED OF ANY UL CLASSIFIED CONCRETE BLOCKS*. MAX DIAM OF OPENING 12-3/4 IN. (324 MM).

   SEE CONCRETE BLOCKS (CAZT) CATEGORY IN FIRE RESISTANCE DIRECTORY FOR NAMES OF MANUFACTURERS.

1A. STEEL SLEEVE —(OPTIONAL, NOT SHOWN) - NOM 12 IN. (305 MM) DIAM (OR SMALLER) SLEEVE FABRICATED FROM NOM 0.019 IN. (0.48 MM) THICK GALV STEEL CAST OR GROUTED INTO FLOOR OR WALL ASSEMBLY FLUSH WITH FLOOR OR WALL SURFACES.

2. THROUGH-PENETRANT —THROUGH-PENETRANT-ONE METALLIC PIPE OR TUBING INSTALLED CONCENTRICALLY OR ECCENTRICALLY WITHIN OPENING. ANNULAR SPACE BETWEEN PENETRANT AND PERIPHERY OF OPENING SHALL BE MIN OF 0 IN. (0 MM) (POINT CONTACT) TO MAX 2 IN. (51 MM). PENETRANT TO BE RIGIDLY SUPPORTED ON BOTH SIDES OF FLOOR OR WALL ASSEMBLY. THE FOLLOWING TYPES AND SIZES OF PENETRANTS MAY BE USED:
   - A. STEEL PIPE —NOM 10 IN. (254 MM) DIAM (OR SMALLER) SCHEDULE 10 (OR HEAVIER) STEEL PIPE.
   - B. IRON PIPE —NOM 10 IN. (254 MM) DIAM (OR SMALLER) CAST OR DUCTILE IRON PIPE.
   - C. COPPER TUBING —NOM 4 IN. (102 MM) DIAM (OR SMALLER) TYPE L (OR HEAVIER) COPPER TUBING.
   - D. COPPER PIPE —NOM 4 IN. (102 MM) DIAM (OR SMALLER) REGULAR (OR HEAVIER) COPPER PIPE.
   - E. CONDUIT —NOM 6 IN. (152 MM) DIAM (OR SMALLER) STEEL CONDUIT OR NOM 4 IN. (102 MM) DIAM (OR SMALLER) STEEL ELECTRICAL METALLIC TUBING.

3. FIRESTOP SYSTEM —THE DETAILS OF THE FIRESTOP SYSTEM SHALL BE AS FOLLOWS:
   - A. PACKING MATERIAL —MIN 1 IN. (25 MM) THICKNESS OF MIN 4 PCF (64 KG/M3) MINERAL WOOL BATT INSULATION FIRMLY PACKED INTO OPENING AS A PERMANENT FORM. PACKING MATERIAL TO BE RECESSED FROM TOP SURFACE OF FLOOR OR FROM BOTH SURFACES OF WALL TO ACCOMMODATE THE REQUIRED THICKNESS OF FILL MATERIAL. WHEN OPTIONAL STEEL SLEEVE IS USED, PACKING MATERIAL TO EXTEND THROUGH FLOOR OR WALL THICKNESS EXCEPT FOR RECESSES NEEDED TO ACCOMMODATE FILL MATERIAL (ITEM 3B).
   - B. FILL, VOID OR CAVITY MATERIALS* - CAULK, SEALANT OR PUTTY —MIN 1 IN. (25 MM) THICKNESS OF CAULK OR PUTTY APPLIED WITHIN THE ANNULUS, FLUSH WITH TOP SURFACE OF FLOOR OR WITH BOTH SURFACES OF WALL.

     3M COMPANY —CP 25WB+ CAULK, FB-3000 WT SEALANT OR MP+ PUTTY

     (NOTE - W RATING APPLIES ONLY WHEN FB-3000 WT IS USED.)
   - C. DUCT WRAP MATERIAL* —NOM 2 IN. (51 MM) THICK DUCT WRAP TIGHTLY WRAPPED AROUND PENETRANT TO EXTEND 12 IN. (305 MM) BELOW FLOOR AND 36 IN. (914 MM) ABOVE FLOOR OR 36 IN. (914 MM) BEYOND BOTH SURFACES OF WALL. LONGITUDINAL SEAMS SEALED WITH FOIL TAPE.

     3M COMPANY —FIREBARRIER DUCT WRAP 20A, 3M FIREBARRIER DUCT WRAP 615, 3M FIREBARRIER DUCT WRAP 615+

*BEARING THE UL CLASSIFICATION MARK

CLASSIFIED c UL US
Classified by Underwriters Laboratories, Inc. to UL 1479 and CAN/ULC-S115

System No. W-L-1054
F Ratings - 1 and 2 Hr (See Items 1 and 3)
T Rating - 0 Hr
L Rating At Ambient - Less Than 1 CFM/Sq Ft
L Rating At 400 F - 4 CFM/Sq Ft

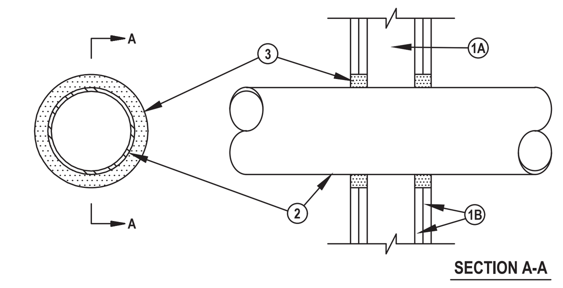

1. WALL ASSEMBLY -- THE 1 OR 2 HR FIRE-RATED GYPSUM WALLBOARD/STUD WALL ASSEMBLY SHALL BE CONSTRUCTED OF THE MATERIALS AND IN THE MANNER SPECIFIED IN THE INDIVIDUAL U300 OR U400 SERIES WALL AND PARTITION DESIGNS IN THE UL FIRE RESISTANCE DIRECTORY AND SHALL INCLUDE THE FOLLOWING CONSTRUCTION FEATURES:
   - A. STUDS -- WALL FRAMING MAY CONSIST OF EITHER WOOD STUDS OR STEEL CHANNEL STUDS. WOOD STUDS TO CONSIST OF NOM 2 BY 4 IN. LUMBER SPACED 16 IN. OC. STEEL STUDS TO BE MIN 2-1/2 IN. WIDE AND SPACED MAX 24 IN. OC. WHEN STEEL STUDS ARE USED AND THE DIAM OF OPENING EXCEEDS THE WIDTH OF STUD CAVITY, THE OPENING SHALL BE FRAMED ON ALL SIDES USING LENGTHS OF STEEL STUD INSTALLED BETWEEN THE VERTICAL STUDS AND SCREW-ATTACHED TO THE STEEL STUDS AT EACH END. THE FRAMED OPENING IN THE WALL SHALL BE 4 TO 6 IN. WIDER AND 4 TO 6 IN. HIGHER THAN THE DIAM OF THE PENETRATING ITEM SUCH THAT, WHEN THE PENETRATING ITEM IS INSTALLED IN THE OPENING, A 2 TO 3 IN. CLEARANCE IS PRESENT BETWEEN THE PENETRATING ITEM AND THE FRAMING ON ALL FOUR SIDES.
   - B. GYPSUM BOARD* -- 5/8 IN. THICK, 4 FT WIDE WITH SQUARE OR TAPERED EDGES. THE GYPSUM BOARD TYPE, THICKNESS, NUMBER OF LAYERS, FASTENER TYPE AND SHEET ORIENTATION SHALL BE AS SPECIFIED IN THE INDIVIDUAL U300 OR U400 SERIES DESIGN IN THE UL FIRE RESISTANCE DIRECTORY. MAX DIAM OF OPENING IS 32-1/4 IN. FOR STEEL STUD WALLS. MAX DIAM OF OPENING IS 14-1/2 IN. FOR WOOD STUD WALLS. THE F RATING OF THE FIRESTOP SYSTEM IS EQUAL TO THE FIRE RATING OF THE WALL ASSEMBLY.

2. THROUGH-PENETRANTS -- ONE METALLIC PIPE, CONDUIT OR TUBING TO BE INSTALLED EITHER CONCENTRICALLY OR ECCENTRICALLY WITHIN THE FIRESTOP SYSTEM. THE ANNULAR SPACE SHALL BE MIN 0 IN. TO MAX 2-1/4 IN. PIPE MAY BE INSTALLED WITH CONTINUOUS POINT CONTACT. PIPE, CONDUIT OR TUBING MAY BE INSTALLED AT AN ANGLE NOT GREATER THAN 45 DEGREES FROM PERPENDICULAR. PIPE, CONDUIT OR TUBING TO BE RIGIDLY SUPPORTED ON BOTH SIDES OF WALL ASSEMBLY. THE FOLLOWING TYPES AND SIZES OF METALLIC PIPES, CONDUITS OR TUBING MAY BE USED:
   - A. STEEL PIPE -- NOM 30 IN DIAM (OR SMALLER) SCHEDULE 10 (OR HEAVIER) STEEL PIPE.
   - B. IRON PIPE -- NOM 30 IN. DIAM (OR SMALLER) CAST OR DUCTILE IRON PIPE.
   - C. CONDUIT -- NOM 4 IN DIAM (OR SMALLER) STEEL ELECTRICAL METALLIC TUBING OR 6 IN. DIAM STEEL CONDUIT.
   - D. COPPER TUBING -- NOM 6 IN. DIAM (OR SMALLER) TYPE L (OR HEAVIER) COPPER TUBING.
   - E. COPPER PIPE -- NOM 6 IN. DIAM (OR SMALLER) REGULAR (OR HEAVIER) COPPER PIPE.

3. FILL, VOID OR CAVITY MATERIAL* -- SEALANT -- MIN 5/8 IN. THICKNESS OF FILL MATERIAL APPLIED WITHIN THE ANNULUS, FLUSH WITH BOTH SURFACES OF WALL. AT THE POINT OR CONTINUOUS CONTACT LOCATIONS BETWEEN PIPE AND WALL, A MIN 1/2 IN. DIAM BEAD OF FILL MATERIAL SHALL BE APPLIED AT THE PIPE WALL INTERFACE ON BOTH SURFACES OF WALL .

HILTI CONSTRUCTION CHEMICALS, DIV OF HILTI INC -- FS-ONE SEALANT *BEARING THE UL CLASSIFICATION MARK

HILTI
Hilti Firestop Systems

Reproduced by HILTI, Inc. Courtesy of Underwriters Laboratories, Inc. December 4, 2002

SCOPE OF WORK

INSTALL NEW FIRE ALARM DEVICES TO AN EXISTING FIRE ALARM SYSTEM ON THE SECOND FLOOR AND ROOF FLOOR, AT VENTURA COUNTY MEDICAL CENTER.

The Initiating Devices are to be wired Class “B”. The Notification Devices are to be wired Class “B”, with the entire system being power limited.

JOHNSON CONTROLS, WILL PROVIDE ALL PROGRAMMING AND SYSTEM TEST, CHECKOUT AND FINAL INSPECTION WITH THE AUTHORITY HAVING JURISDICTION. THE SEQUENCE OF OPERATIONS REMAINS THE SAME.

HCAI NOTES

THE FIRE ALARM SYSTEM SHALL CONFORM TO ARTICLE 760 OF THE CALIFORNIA ELECTRIC CODE.

INSTALLATION OF THE FIRE ALARM SYSTEM SHALL NOT BE STARTED UNTIL DETAILED PLANS AND SPECIFICATIONS. INCLUDING CALIFORNIA STATE FIRE MARSHALL LISTING NUMBERS FOR EACH COMPONENT OF THE SYSTEM HAVE BEEN APPROVED BY THE OFFICE OF STATEWIDE HEALTH PLANNING AND DEVELOPMENT.

UPON COMPLETION OF THE INSTALLATION OF THE FIRE ALARM SYSTEM A SATISFACTORY TEST OF THE SYSTEM SHALL BE MADE IN THE PRESENCE OF THE FIRE MARSHALL.

A MINIMUM OF 48 HOURS NOTICE SHALL BE REQUIRED FOR ANY INSPECTION AND/OR TESTING.

ALL DEVICES OF THE FIRE ALARM SYSTEM SHALL BE APPROVED AND LISTED BY THE CALIFORNIA STATE FIRE MARSHAL.

A STAMPED SET OF APPROVED FIRE ALARM PLANS SHALL BE ON THE JOB SITE AND USED FOR INSTALLATION. ANY DEVIATION FROM APPROVED PLANS, INCLUDING THE SUBSTITUTION OF DEVICES SHALL BE APPROVED BY HCAI ANY DISCREPANCIES BETWEEN THE DRAWINGS AND THE CODE, OR RECOGNIZED STANDARDS SHALL BE BROUGHT TO THE ATTENTION OF THE INSPECTOR OF RECORD.

A CERTIFICATE OF COMPLIANCE SHALL BE PREPARED BY THE INSTALLER AND GIVEN TO THE FIRE MARSHAL UPON COMPLETION OF THE INSTALLATION.

AN AIR VELOCITY TEST SHALL BE CONDUCTED WITH TEST REPORT SUBMITTED TO HCAI FIELD FIRE MARSHALL.

H.C.A.I. PLAN REVIEW CHECK LIST

	SCOPE OF PROJECT
	FLOOR PLAN SHOWING FIRE ALARM DEVICES
	RISER DIAGRAM
	POINT TO POINT DIAGRAM
X	CALIFORNIA STATE FIRE MARSHAL LISTING SHEET SHOWING EXPIRATION DATE FOR ALL COMPONENTS
X	MANUFACTURERS SPECIFICATION SHEET ON ALL FIRE ALARM EQUIPMENT.
X	BATTERY CALCULATION OR RECALCULATION
	VOLTAGE DROP CALCULATION OR RECALCULATION
X	ACCURATE LEGEND OF SYMBOLS FOR ALL FIRE ALARM DEVICES BEING INSTALLED
X	ELEVATION DETAIL OF MANUAL PULL STATION INSTALLATION
X	ELEVATION DETAIL OF VISUAL ALARM SIGNALING DEVICES
	LOCATION OF FIRE/SMOKE BARRIER WALLS ON FLOOR PLAN
X	IDENTIFICATION OF TYPE OF WIRING USED, INCLUDING GAUGE AND WIRE COUNTS
X	DESIGN NUMBER AND DETAIL OF THROUGH PENETRATION FIRESTOP SYSTEM
X	FLOOR PLAN SHOWING ROOM IDENTIFICATION/USE
N/A	DETAILS ON SUPPORT AND ANCHORAGE OF ANY FIRE ALARM EQUIPMENT WEIGHING OVER 20 POUNDS
X	SEQUENCE OF OPERATION/EVENTS WHEN ALARM SYSTEM IS ACTIVATED
	H.C.A.I. PROJECT NUMBER

GENERAL NOTES

1. THESE DRAWINGS DEPICT GENERAL LOCATIONS OF LIFE SAFETY EQUIPMENT & FIELD DEVICES. EXACT ROUTING OF CONDUITS IS TO BE DETERMINED IN THE FIELD BY THE INSTALLING CONTRACTOR TO SUIT CONDITIONS. ALL CHANGES SHALL BE CLEARLY INDICATED ON THE RECORD DRAWINGS.
2. SHOULD ANY CONDITIONS EXIST THAT DIFFER FROM WHAT IS INDICATED ON THESE DRAWINGS WHICH CAUSE MAJOR DEVIATIONS IN THE WORK SHOWN, THE CONTRACTOR SHALL CONTACT JOHNSON CONTROLS IN A TIMELY MANNER SO AS NOT TO IMPAIR THE CONSTRUCTION SCHEDULE.
3. CONTRACTOR IS RESPONSIBLE FOR MAKING AND OBTAINING APPROVAL FOR ALL NECESSARY ADJUSTMENTS IN CIRCUITING AS REQUIRED TO ACCOMMODATE THE RELOCATION OF EQUIPMENT AND/OR DEVICES WHICH ARE AFFECTED BY ANY AUTHORIZED CHANGE. ALL CHANGES SHALL BE CLEARLY INDICATED ON THE RECORD DRAWINGS.
4. A STAMPED SET OF APPROVED FIRE ALARM DRAWINGS SHALL BE AT THE JOB SITE AND SHALL BE USED FOR INSTALLATION.
5. THE POWER CIRCUIT TO THE FACP AND TO THE FIRE ALARM POWER SUPPLIES SHALL BE ON A DEDICATED 120V, 20A BRANCH CIRCUIT BREAKER, AND SHALL HAVE A RED MARKING, LOCK-ON PROVISION AND SHALL BE IDENTIFIED AS "FIRE ALARM CIRCUIT CONTROL." THE LOCATION OF THE CIRCUIT DISCONNECT MEANS (CIRCUIT BREAKER) SHALL BE PERMANENTLY IDENTIFIED AT THE FIRE ALARM CONTROL UNIT.
6. UPDATE THE AS-BUILT DRAWING SET DAILY WITH JOB PROGRESS. RETURN THE AS-BUILT DRAWING SET TO JOHNSON CONTROLS NO LATER THAN 7 DAYS AFTER FINAL TEST.
7. THE CONTRACTOR WILL MAINTAIN ALL AREAS OF THE BUILDING IN A NEAT AND WORKMANLIKE MANNER.
8. DO NOT APPLY POWER EXCEPT IN THE PRESENCE OF A FACTORY TRAINED JOHNSON CONTROLS TECHNICAL REPRESENTATIVE.
9. ANY SMOKE DETECTOR HEAD INSTALLED BEFORE THE BUILDING IS CLEANED AND ACCEPTED SHALL BE COVERED TO PROTECT FROM DUST. ANY FALSE ALARMS DUE TO DIRT CONTAMINATED HEADS SHALL BE THE RESPONSIBILITY OF THE FIRE ALARM INSTALLER.
10. THE FIRE ALARM INSTALLER WILL MAINTAIN THE FIRE RESISTANCE INTEGRITY OF ALL WALL, CEILING, AND ROOF ASSEMBLIES ANY TIME THAT WORK IS NOT ACTIVELY BEING PERFORMED.
11. INSTALLATION OF DEVICES SHALL BE IN ACCORDANCE WITH MANUFACTURER'S INSTRUCTIONS. POWER LIMITED AND NON-POWER LIMITED FIELD WIRING MUST BE INSTALLED WITHIN THE FACP ENCLOSURE IN ACCORDANCE WITH MANUFACTURER'S INSTRUCTIONS AND APPLICABLE ELECTRICAL CODES. REFER TO 'APPLICABLE CODES & STANDARDS' FOR SPECIFIC CODE REFERENCES.
12. ALL WIRING SHALL BE INSTALLED ACCORDING TO APPLICABLE ELECTRICAL CODES.
13. FIRE ALARM CIRCUITS SHALL BE IDENTIFIED IN ACCORDANCE WITH APPLICABLE ELECTRICAL CODES. MARK ALL FIRE ALARM WIRES IN ACCORDANCE WITH APPLICABLE ELECTRICAL CODE SECTIONS FOR POWER LIMITED AND NON-POWER LIMITED WIRE.
14. FIRE ALARM CABLE INSTALLED IN DUCTS, PLENUM, AND OTHER SPACES USED FOR ENVIRONMENTAL AIR SHALL BE TYPE FPLP.
15. FIRE ALARM CABLE INSTALLED IN THE VERTICAL RUNS AND PENETRATING MORE THAN ONE FLOOR OR CABLES INSTALLED IN VERTICAL RUNS IN SHAFTS SHALL BE TYPE FPLR.
16. FIRE ALARM CABLE INSTALLED IN UNDERGROUND CONDUIT OR OTHER WET LOCATIONS SHALL BE UL LISTED FOR WET LOCATIONS.
17. FIRE ALARM CIRCUITS EXTENDING BEYOND ONE BUILDING AND RUN OUTDOORS SHALL BE INSTALLED IN ACCORDANCE APPLICABLE ELECTRICAL CODES, WHERE APPLICABLE.
18. ALL WIRING, INCLUDING SHIELDS MUST BE DRY AND FREE OF SHORTS AND GROUNDS.
19. ALL SHIELDED WIRE MUST HAVE SHIELD CONTINUITY AT FULL LENGTH OF THE WIRE.
20. ONLY SYSTEM WIRING CAN BE RUN IN THE SAME CONDUIT.
21. 120VAC IS NOT PERMITTED IN THE SAME CONDUIT WITH LOW VOLTAGE WIRING.
22. MAINTAIN MAXIMUM CONDUIT FILL RATIO AS PER APPLICABLE ELECTRICAL CODES REQUIREMENTS.
23. EXISTING CONDUITS MAY BE USED BY THE INSTALLATION CONTRACTOR AS DEEMED NECESSARY; HOWEVER, ANY EXISTING CONDUIT WILL BE USED ONLY IF CONDUITS MEET CURRENT STANDARDS AND CODES. JOHNSON CONTROLS MAKES NO STATEMENTS WRITTEN OR VERBAL AS TO THE CONDITION OF EXISTING CONDUITS.
24. 120 VAC 60Hz INPUT POWER FOR FIRE ALARM CONTROLS SHALL BE A DEDICATED BRANCH CIRCUIT OF AN EMERGENCY SYSTEM [ECE 517.32(C)(1) WITH LOCKING BREAKER PROPERLY LABELED "FIRE ALARM CIRCUIT CONTROL" AND PERMANENTLY IDENTIFIED AT THE FIRE ALARM CONTROL PANEL AS PER NFPA 72 1-5.2.5.2.
25. ANY SMOKE DETECTOR HEAD INSTALLED BEFORE BUILDING IS CLEANED AND ACCEPTED SHALL BE COVERED TO PROTECT FROM DUST. ANY FALSE ALARMS DUE TO DIRT-CONTAMINATED HEADS SHALL BE THE RESPONSIBILITY OF THE ELECTRICAL CONTRACTOR.
26. THESE DRAWINGS ARE DIAGRAMMATIC. THEY SHOW DEVICE LOCATION, NUMBER OF CONDUCTORS, WIRE TYPE, CIRCUITING AND ROUTING. THE BACK BOX SCHEDULE LISTS THE BACK BOXES FOR THAT SPECIFIC DEVICE. IT IS THE RESPONSIBILITY OF THE ELECTRICAL CONTRACTOR TO ENSURE THAT ALL CONDUIT AND PULL BOXES ARE SIZED IN ACCORDANCE WITH THE FILL REQUIREMENTS OF THE NATIONAL ELECTRIC CODE / CALIFORNIA ELECTRICAL CODE ARTICLE #370. 3/4" MINIMUM.

SEQUENCE OF OPERATION (TO MATCH EXISTING)

	MANUAL PULL STATION AT NON AMC-11 LOCATIONS	MANUAL PULL STATION AT AMC-11 LOCATIONS	AREA SMOKE/HEAT DETECTOR	DUCT DETECTOR AHU-F1 AHU-F2	PATIENT RM. SMOKE DETECTORS & HEAT DETECTORS IN PATIENT TOILET	ELEVATOR LOBBY SMOKE DETECTOR	ELEV. RM. SMOKE DETECTOR	ELEV. RM. HEAT DETECTOR	WATER FLOW SWITCH	PIV/ TAMPER SWITCH	PREACTION SPRINKLER MONITORING ALARM	PREACTION SPRINKLER MONITORING TROUBLE	120VAC POWER FAILURE	FIRE PUMP ROOM	REFRIG DETECTION SYSTEM ***	PBX DELAYED EGRESS MUSHROOM BUTTON	EGRESS SYSTEM POWER FAILURE	EGRESS EMERGENCY LIGHTING FAILURE
ANNUNCIATE AT FIRE CONTROL PANEL (alarm & trouble)	YES	YES	YES	YES	YES	YES	YES	YES	YES	YES	YES	YES	YES	YES	YES	YES	YES**	YES**
ANNUNCIATE AT PBX	YES	YES	YES	YES	YES	YES	YES	YES	YES	YES	YES	YES	YES	YES	YES	YES	YES**	YES**
GENERAL ALARM AUDIBLE/VISUAL ALL BLDGS	YES	YES	YES	YES	YES	YES	YES	YES	YES	NO	NO	NO	NO	NO	NO	NO	NO	NO
RELEASE ALL ELECTRO-MAGNETICALLY-HELD DOORS	YES	YES	YES	YES	YES	YES	YES	NO	YES	NO	NO	NO	YES	NO	NO	NO	NO	NO
RELEASE ELEVATOR FIRE DOORS (SMOKE GUARDS)	NO	NO	NO	NO	NO	YES	NO	NO	NO	NO	NO	NO	NO	NO	NO	NO	NO	NO
*RELEASE FIRE SHUTTER DOOR	NO	NO	YES*	NO	NO	NO	NO	NO	NO	NO	NO	NO	NO	NO	NO	NO	NO	NO
RECALL ELEVATORS SERVING FLOOR OF ALARM	NO	NO	NO	NO	NO	YES	YES	NO	NO	NO	NO	NO	NO	NO	NO	NO	NO	NO
ELEVATOR POWER SHUTDOWN	NO	NO	NO	NO	NO	NO	NO	YES	NO	NO	NO	NO	NO	NO	NO	NO	NO	NO
ALL SMOKE/FIRE DAMPERS CLOSE AHU SHUT DOWN (D)	NO	NO	YES	YES	YES	YES	YES	NO	NO	NO	NO	NO	YES	NO	NO	NO	NO	NO
ACTIVATE N.S. ANNUNCIATOR AND CORRESPONDENT PATIENT ROOM CORRIDOR LIGHT	NO	NO	NO	NO	YES	NO	NO	NO	NO	NO	NO	NO	NO	NO	NO	NO	NO	NO
ACTIVATE PREACTION SOLENOID VALVE	NO	NO	YES	NO	NO	NO	NO	NO	NO	NO	NO	NO	NO	NO	NO	NO	NO	NO
DEACTIVATE DELAYED EGRESS DOORS AT NON AMC-11 LOCATIONS	NO	N/A	YES	YES	YES	YES	YES	NO	YES	NO	YES	NO	YES	NO	NO	YES	YES	YES
DEACTIVATE DELAYED EGRESS DOORS AT AMC-11 LOCATIONS	N/A	YES**	YES	YES	YES	YES	YES	NO	YES	NO	YES	NO	YES	NO	NO	YES	YES	YES
ACTIVATE FIRE SPRINKLER BELL	N/A	N/A	N/A	N/A	N/A	N/A	N/A	N/A	YES	N/A	N/A	N/A	N/A	N/A	N/A	N/A	N/A	N/A
RELEASE CHILLER ROOM SHUTTER DOORS	N/A	N/A	YES***	N/A	N/A	N/A	N/A	N/A	N/A	N/A	N/A	N/A	N/A	N/A	YES***	N/A	N/A	N/A

* ASSOCIATED SMOKE DETECTORS

** WITH 15 SECOND DELAY, BUILT INTO FIRE ALARM PROGRAMMING FOR PULL STATIONS AT THESE AMC-11 LOCATIONS ONLY.
*** THE CHILLER ROOM ROLL-DOWN DOORS HAVE THE FOLLOWING SEG OF OPERATIONS:

A. NORMAL MODE:
BOTH DOORS REMAIN IN THE NORMAL OPEN POSITION WITH MAN DOOR CLOSED.
BOTH DOORS OPTIONALLY OPEN VIA DOOR OPERATOR.

B. FIRE MODE:
IN EVENT OF SMOKE DETECTION, THE FIRE ALARM SYSTEM SHALL COMMAND THE FIRE RATED ROLL-DOWN DOOR.

C. REFRIGERANT LEAK DETECTION MODE:
IN THE EVENT OF A HIGH ALARM CONDITION AT 50 PPM, AS DETECTED BY THE CHILLER REFRIGERANT MONITORING SYSTEM, THE FIRE ALARM SYSTEM SHALL COMMAND BOTH ROLL-DOWN DOORS TO THE CLOSED POSITION.

(D) EXISTING HVAC UNIT's SERVING TO THE SCOPE OF WORK WILL MAINTAIN THEIR EXISTING SEQUENCE OF OPERATIONS, ALREADY APPROVED BY HCAI AT THE TIME IT WAS INSTALLED IN A PREVIOUS HCAI PROJECT. UNLESS A NEW SEQUENCE OF OPERATION FOR THE EXISTING HVAC UNIT's IS PROVDED. PER THE PROJECT'S MECHANICAL DRAWINGS

MOUNTING DETAILS

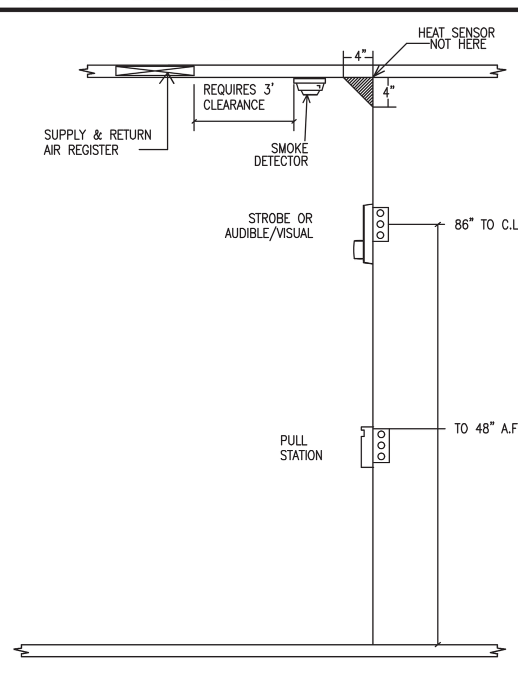

CALIFORNIA CODE OF REGULATIONS

2019 CALIFORNIA ADMINISTRATIVE CODE (CAC)
Part 1, Title 24, California Code Regulations (CCR)

2019 CALIFORNIA BUILDING CODE (CBC)
Part 2, Title 24, CCR
Based on the 2015 International Building Code (IBC)

2019 CALIFORNIA ELECTRICAL CODE (CEC)
Part 3, Title 24, CCR
Based on the 2014 National Electrical Code (NEC)

2019 CALIFORNIA MECHANICAL CODE (CMC)
Part 4, Title 24, CCR
Based on the 2015 Uniform Mechanical Code (UMC)

2019 CALIFORNIA PLUMBING CODE (CPC)
Part 5, Title 24, CCR
Based on the 2015 Uniform Plumbing Code (UPC)

2019 CALIFORNIA FIRE CODE (CFC)
Part 9, Title 24, CCR
Based on the 2015 International Fire Code (IFC)

NFPA STANDARD

72-2016 NATIONAL FIRE ALARM CODE - N.F.P.A. 72 - 2016 EDITION

BUILDING DATA

PROJECT SCOPE: REMODELING OF EXISTING NURSING UNIT TO ADD PATIENT ROOMS AND SUPPORT SPACES FOR USE AS A PEDIATRIC NURSING UNIT. ADDITION OF A PEDESTRIAN WALKWAY BRIDGE FROM THE PEDIATRIC UNIT TO EXISTING ROOFTOP PLAY YARD.

FUNCTIONAL PROGRAM: THE SCOPE OF THIS PROJECT WAS THE MAJOR PORTION OF THE SERVICES DESCRIBED IN THE FUNCTIONAL PROGRAM PREVIOUSLY SUBMITTED UNDER THIS PROJECT NUMBER. REMODELING ON THE FAINER WING FOURTH FLOOR AND IN THE NORTH TOWER(HRW) WILL BE SUBMITTED AS SEPARATE PROJECTS.

OCCUPANCY CLASSIFICATION: BUILDING 304 FLOORS 1-4 = 1-2 ACUTE CARE HOSPITAL. BUILDING 304 BASEMENT = S-2 GENERAL STORAGE.

CONSTRUCTION TYPE: TYPE 1-A.

FIRE SPRINKLERS: BUILDING 304 IS SPRINKLERED.

GROSS BUILDING AREA: NO CHANGE.

AREA OF REMODEL: 9,075 S.F.

NUMBER OF STORIES: BASEMENT + 4 STORIES (NO CHANGE).

CORRIDOR CONSTRUCTION: 1 HOUR RATED.

LICENSED BEDS: EXISTING: 25 BEDS IN SUSPENSE.
PROPOSED: 16 PEDIATRIC BEDS.
TOTAL FACILITY BED COUNT: NO CHANGE.

ACCESSIBLE PATIENT ROOMS: EXISTING: 0 OF 13 ROOMS ARE ACCESSIBLE.
PROPOSED: 2 OF 13 ROOMS WILL BE ACCESSIBLE.

EQUIPMENT STORAGE: REQUIRED: 10 S.F. PER BED=160 S.F.
PROVIDED: 172 S.F. (SEE NOTE 12, SHEET A2.2)

CURRENT SB-1953 STATUS: SPC 4, NPC 4.

SHEET INDEX

Sheet List Table

Sheet Number	Sheet Title
General Information (FA-000 Series)	
FA-001	COVER SHEET
Floorplans (FA-100 Series)	
FA-101	PARTIAL SECOND FLOOR DEVICE PLACEMENT PLAN
FA-102	PARTIAL SECOND FLOOR RCP AND ROOF FLOOR
Risers (FA-200 Series)	
FA-201	PARTIAL RISER DIAGRAM - SECOND FLOOR
Calculations (FA-600 Series)	
FA-601	CALCULATIONS AND SCHEDULES
Typical Details (FA-700 Series)	
FA-701	WIRING TYPICALS

SITE MAP

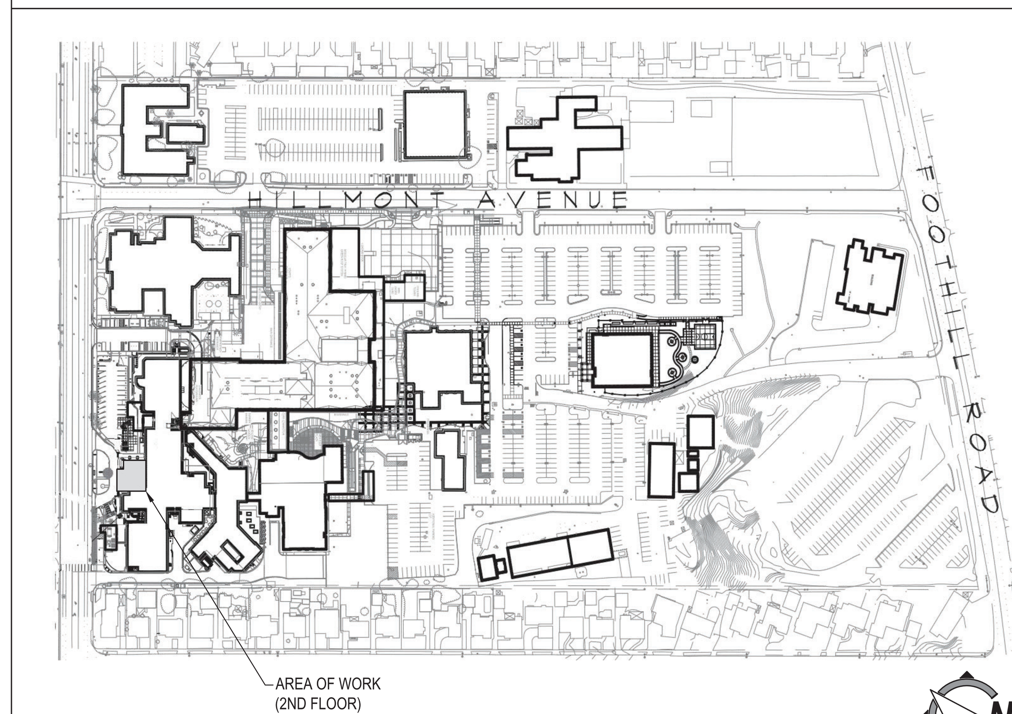

VICINITY MAP

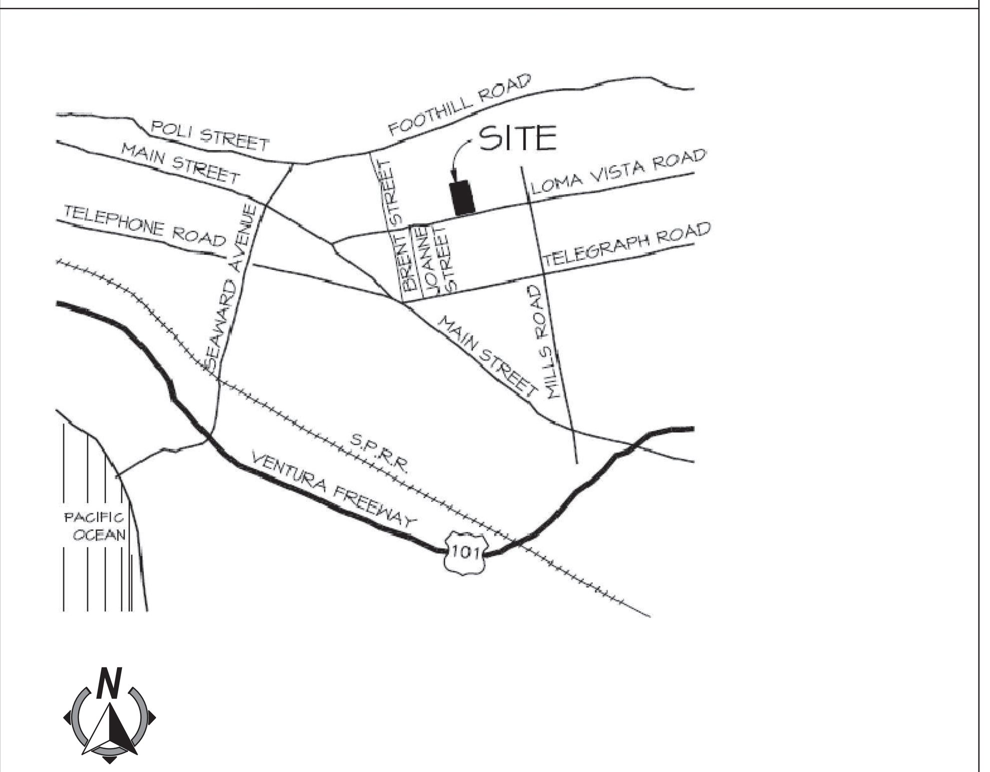

Johnson Controls
DISTRICT - 437
1868 PALMA DRIVE, SUITE M
VENTURA, CA 93003
SERVICE: 805-642-0366
PHONE: 805-642-0366
FAX: 805-654-6103

PROFESSIONAL SEALS

LICENSED ARCHITECT JAY LOMAGNO C-20801 12-31-23 STATE OF CALIFORNIA

REGISTERED PROFESSIONAL ENGINEER ROMAN U. RETCHER No. 16681 ELECTRICAL STATE OF CALIFORNIA

PERMIT APPROVAL STAMP

REVIEWED IN ACCORDANCE WITH THE REQUIREMENTS OF T24, CCR
APPROVED
Department of Health Care Access and Information
FACILITIES DEVELOPMENT DIVISION
9/28/2022, 3:17:57 PM
H202495-56-00
Laura Baldrati

PERMIT NO HCAI #H202495-56-00

NO	REVISION	DATE

PUBLIC WORKS PROJECT MANAGER

CONSULTANT PROJECT MANAGER: Jay Lomagno

DRAWN BY: S.LOAIZA | CHECKED BY: M.PAZ

CONSULTANT JOB NO | DATE: 06/20/2022

PROJECT TITLE AND ADDRESS

VENTURA COUNTY MEDICAL CENTER PEDIATRIC UNIT

300 HILLMONT AVE
VENTURA, CA 93003

COUNTY SPEC NUMBER: CP21-04

COUNTY PROJECT NUMBER: P6T20009

COUNTY DWG NO | SHEET 74 OF 89

SHEET TITLE: COVER SHEET

SHEET NO: FA-001

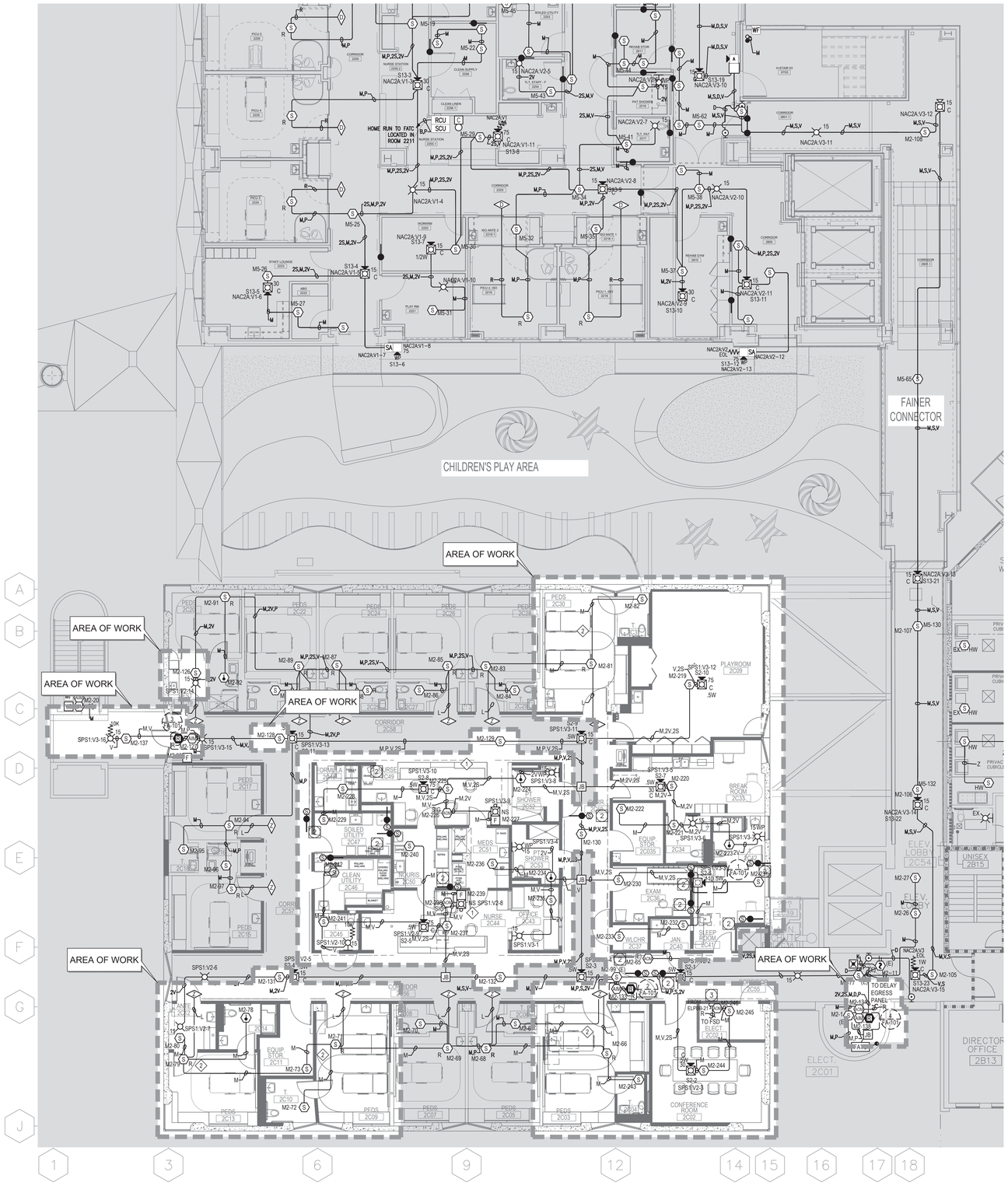

PARTIAL SECOND FLOOR DEVICE PLACEMENT PLAN

SCALE:1/8" = 1'-0"

= NOT IN CONTRACT AREA

(E) = EXISTING DEVICE TO REMAIN

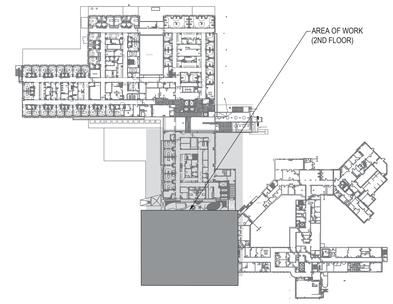

2ND FLOOR KEY PLAN

SCALE:NOT TO SCALE

= NOT IN CONTRACT AREA

GENERAL NOTES:

1. ALL CEILINGS ARE ASSUMED TO BE 10' A.F.F., SMOOTH CONSTRUCTION UNLESS NOTED OTHERWISE.
2. TAP ALL SPEAKERS AT 0.5W UNLESS NOTED OTHERWISE.
3. SET ALL SPEAKER VOLTAGE JUMPERS TO THE 70.7V SETTING.
4. ALL NOTIFICATION APPLIANCE CANDELA INTENSITY PLUGS SHALL RETAIN THEIR FACTORY SETTING OF "FACP" UNLESS OTHERWISE DIRECTED BY THE AUTHORITY HAVING JURISDICTION.
5. DO NOT CHANGE DEFAULT APPLIANCE CONFIGURATION SWITCH SETTINGS ON ADDRESSABLE A/V DEVICES (CFIG1). REFER TO DEVICE DETAILS AND INSTALLATION INSTRUCTIONS FOR MORE INFORMATION.
6. THE DEVICE ADDRESSES INDICATED ON THESE DRAWINGS ARE AN ALPHANUMERIC DESCRIPTION OF WHICH CIRCUIT THE DEVICE IS LOCATED ON. DEVICES MAY BE ASSIGNED A DIFFERENT NUMBER WITHIN THE PANEL PROGRAM. CONSULT WITH A JOHNSON CONTROLS TECHNICIAN BEFORE APPLYING A PHYSICAL LABEL TO ANY DEVICES.

1. CHIME/STROBE TO ANNUCIATE PATIENT ROOMS SMOKE DETECTOR ACTIVATION IN COMPLIANCES WITH CBC ART. (907.2.6.2.2-1).
2. TYPICAL INSTALL RELAY 4098-9860 IN BACK BOX.

NOTES:

1. 120VAC SFD WIRING PROVIDED BY ELECTRICAL CONTRACTOR.
2. SFD's CONTROLLED BY TOTAL COVERAGE SMOKE DETECTION SYSTEM PER CBC 2019 717.3.3.2 METHOD 5.
3. NFPA 72 2013, SEC. 21.2.4* EMERGENCY CONTROL FUNCTION INTERFACE DEVICES SHALL BE LOCATED WITHIN 3 ft (1m) OF THE COMPONENT CONTROLLING THE EMERGENCY CONTROL FUNCTION.

FA-101

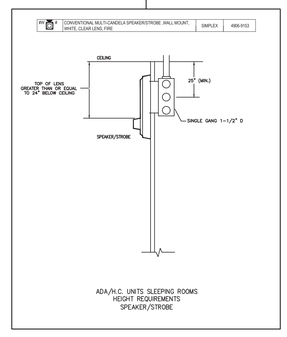

2 FA-101

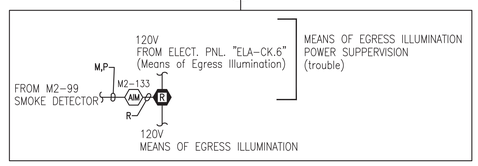

3 FA-101

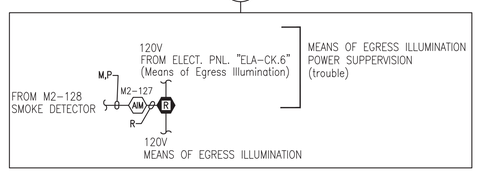

4 FA-101

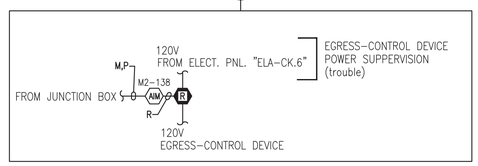

VENTURA COUNTY HEALTH CARE AGENCY

PUBLIC WORKS VENTURA COUNTY

ENGINEERING SERVICES

RASMUSSEN & ASSOCIATES
Architecture
Planning
Interiors
21 S. California Street
Fourth Floor
Ventura, California 93001
(805) 648-1234

Johnson Controls

DISTRICT - 437
1868 PALMA DRIVE, SUITE M
VENTURA, CA 93003
SERVICE: 805-642-0366
PHONE: 805-642-0366
FAX: 805-654-6103

PROFESSIONAL SEALS

PERMIT APPROVAL STAMP

REVIEWED IN ACCORDANCE WITH THE REQUIREMENTS OF T24, CCR
APPROVED
Department of Health Care Access and Information
FACILITIES DEVELOPMENT DIVISION
9/28/2022, 3:17:57 PM
H202495-56-00
Laura Baldrati

PERMIT NO HCAI #H202495-56-00

NO	REVISION	DATE

PUBLIC WORKS PROJECT MANAGER

CONSULTANT PROJECT MANAGER
Jay Lomagno

DRAWN BY	CHECKED BY
S.LOAIZA	M.PAZ
CONSULTANT JOB NO	DATE
	06/20/2022

PROJECT TITLE AND ADDRESS

VENTURA COUNTY MEDICAL CENTER PEDIATRIC UNIT

300 HILLMONT AVE
VENTURA, CA 93003

COUNTY SPEC NUMBER
CP21-04

COUNTY PROJECT NUMBER
P6T20009

COUNTY DWG NO — SHEET 75 OF 89

SHEET TITLE
PARTIAL SECOND FLOOR DEVICE PLACEMENT PLAN

SHEET NO
FA-101

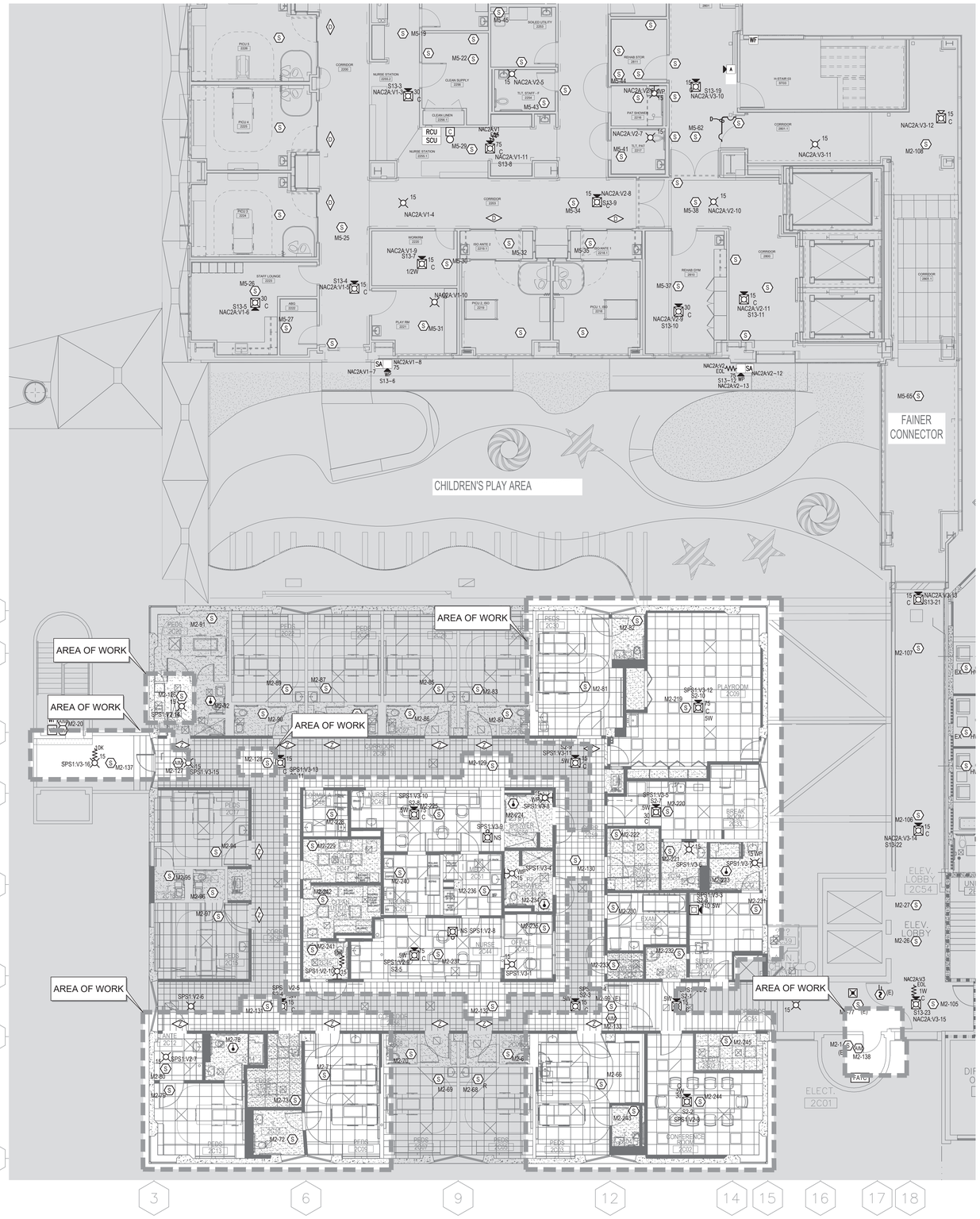

PARTIAL SECOND FLOOR RCP
SCALE:1/8" = 1'-0"

= NOT IN CONTRACT AREA

(E) = EXISTING DEVICE TO REMAIN

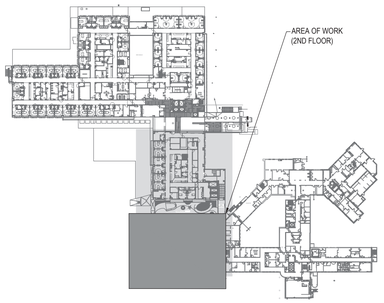

2ND FLOOR KEY PLAN
SCALE:NOT TO SCALE

= NOT IN CONTRACT AREA

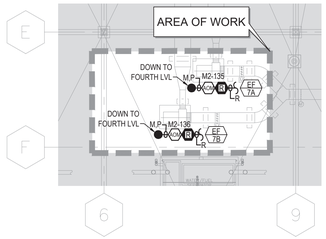

PARTIAL ROOF FLOOR DEVICE PLACEMENT PLAN
SCALE:1/8" = 1'-0"

= NOT IN CONTRACT AREA

ROOF FLOOR RCP
SCALE:NOT TO SCALE

= NOT IN CONTRACT AREA

VENTURA COUNTY HEALTH CARE AGENCY

PUBLIC WORKS VENTURA COUNTY

ENGINEERING SERVICES

RASMUSSEN & ASSOCIATES
Architecture
Planning
Interiors
21 S. California Street
Fourth Floor
Ventura, California 93001
(805) 648-1234

Johnson Controls

DISTRICT - 437
1868 PALMA DRIVE, SUITE M
VENTURA, CA 93003
SERVICE: 805-642-0366
PHONE: 805-642-0366
FAX: 805-654-6103

PROFESSIONAL SEALS

PERMIT APPROVAL STAMP

REVIEWED IN ACCORDANCE WITH THE REQUIREMENTS OF T24, CCR
APPROVED
Department of Health Care Access and Information
FACILITIES DEVELOPMENT DIVISION
9/28/2022, 3:17:57 PM
H202495-56-00
Laura Baldrati

PERMIT NO HCAI #H202495-56-00

NO	REVISION	DATE

PUBLIC WORKS PROJECT MANAGER

CONSULTANT PROJECT MANAGER
Jay Lomagno

DRAWN BY	CHECKED BY
S.LOAIZA	M.PAZ
CONSULTANT JOB NO	DATE
	06/20/2022

PROJECT TITLE AND ADDRESS

VENTURA COUNTY MEDICAL CENTER PEDIATRIC UNIT

300 HILLMONT AVE
VENTURA, CA 93003

COUNTY SPEC NUMBER
CP21-04

COUNTY PROJECT NUMBER
P6T20009

COUNTY DWG NO — SHEET 76 OF 89

SHEET TITLE
PARTIAL SECOND FLOOR RCP AND ROOF FLOOR

SHEET NO
FA-102

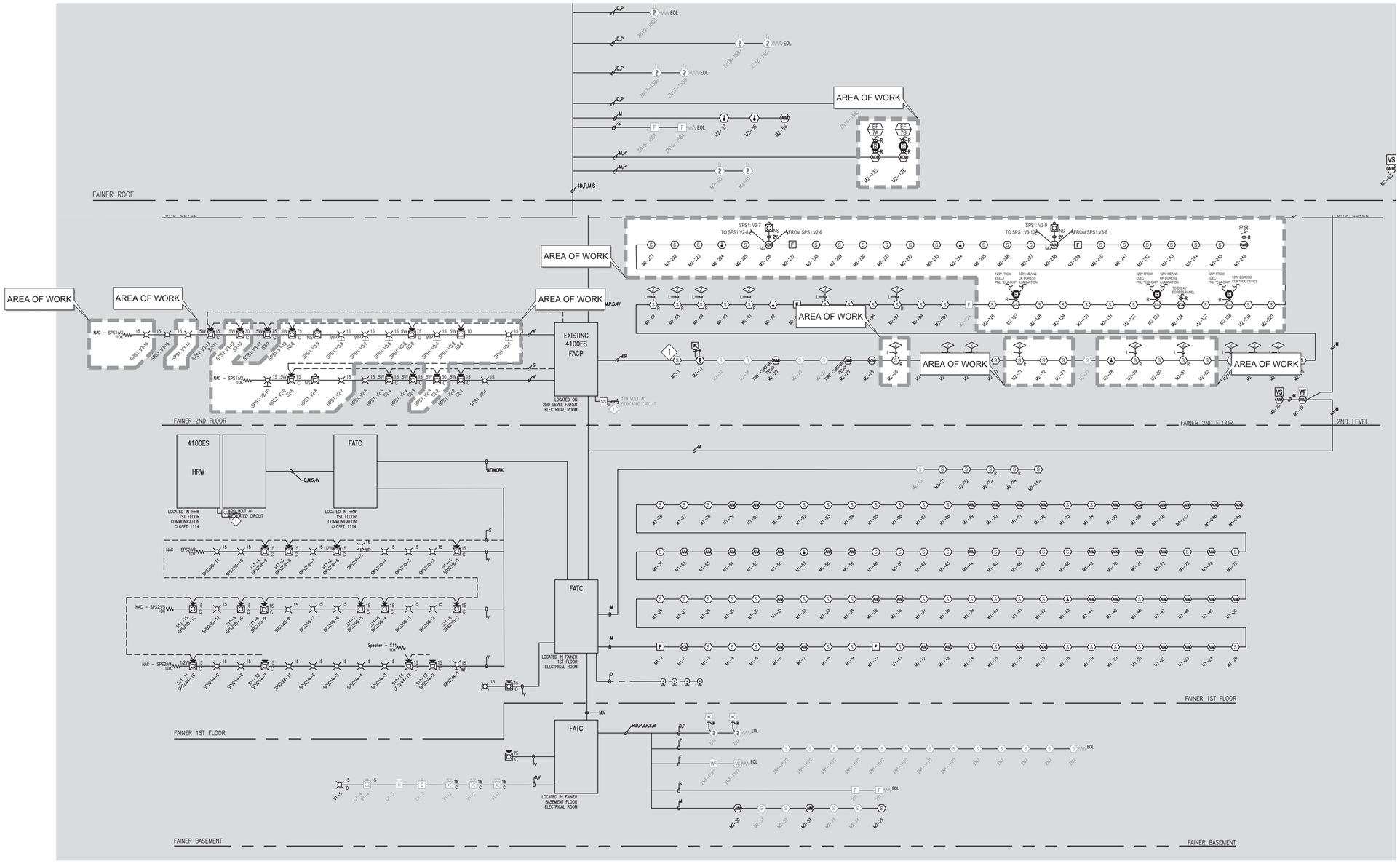

PARTIAL RISER DIAGRAM - SECOND FLOOR AND ROOF FLOOR

SCALE:N.T.S.

VENTURA COUNTY HEALTH CARE AGENCY

PUBLIC WORKS VENTURA COUNTY

ENGINEERING SERVICES

RASMUSSEN & ASSOCIATES
Architecture
Planning
Interiors
21 S. California Street
Fourth Floor
Ventura, California 93001
(805) 648-1234

Johnson Controls

DISTRICT - 437
1868 PALMA DRIVE, SUITE M
VENTURA, CA 93003
SERVICE: 805-642-0366
PHONE: 805-642-0366
FAX: 805-654-6103

PROFESSIONAL SEALS

PERMIT APPROVAL STAMP

REVIEWED IN ACCORDANCE WITH THE REQUIREMENTS OF T24, CCR
APPROVED
Department of Health Care Access and Information
FACILITIES DEVELOPMENT DIVISION
9/28/2022, 3:17:57 PM
H202495-56-00
Laura Baldrati

PERMIT NO HCAI #H202495-56-00

NO	REVISION	DATE

PUBLIC WORKS PROJECT MANAGER

CONSULTANT PROJECT MANAGER
Jay Lomagno

DRAWN BY S.LOAIZA
CHECKED BY M.PAZ
CONSULTANT JOB NO
DATE 06/20/2022

PROJECT TITLE AND ADDRESS

VENTURA COUNTY MEDICAL CENTER PEDIATRIC UNIT

300 HILLMONT AVE
VENTURA, CA 93003

COUNTY SPEC NUMBER
CP21-04

COUNTY PROJECT NUMBER
P6T20009

COUNTY DWG NO
SHEET 77 OF 89

SHEET TITLE

PARTIAL RISER DIAGRAM - SECOND FLOOR

SHEET NO

FA-201

2nd Floor FACP 4100es FACP

Module	Qty	Description		Standby Current	Total Standby	Alarm Current	Total Alarm
Panel Equipment							
4100-9111	1	4100 CONFIG. DOMESTIC 120V	*	0.3730	0.3730	0.4700	0.4700
4100-3101	1	IDNET MODULE, UP TO 250 POINTS	*	0.0750	0.0750	0.1150	0.1150
4100-1315	1	ANALOG 100W AMP W/6 B NACS 120VAC 70V		0.0850	0.0850	3.8000	3.8000
4100-5111	1	SYSTEM POWER SUPPLY (SPS) - 120VAC 60HZ		0.1750	0.1750	0.1850	0.1850
		Panel Totals			0.7080		4.5700
IDNet Addressable Devices (SLC)							
ADDED 3 → 4090-9001	36	IDNET SUPERVISED IAM	*				
4090-9002	8	IDNET RELAY IAM	*				
ADDED 2 → 4090-9007	4	IDNET ADDRESSABLE SIGNAL ZAM	*				
ADDED 4 → 4090-9008	5	ADDRESSABLE DUAL CONTACT RELAY IAM	*				
ADDED 36 → 4098-9714	179	TRUEALARM PHOTO SMOKE SENSOR					
ADDED 3 → 4098-9733	25	TRUEALARM HEAT SENSOR	*				
4098-9750	2	TRUEALARM IN-DUCT SENSOR BASE W/O RELAY	*				
4098-9751	1	TRUEALARM IN-DUCT SENSOR BASE W/ RELAY	*				
4098-9755	2	TRUEALARM DUCT SMOKE SENSOR W/O RELAY OUTPUT	*				
ADDED 4 → 4098-9780	26	TRUEALARM 2 WIRE RELAY SENSOR BASE	*				
4098-9791	16	TRUEALARM SENSOR BASE W/ RELAY DRIVER	*				
ADDED 35 → 4098-9792	162	TRUEALARM SENSOR BASE	*				
4099-9004	5	ADDRESSABLE SINGLE ACTION MANUAL STATION	*				
ADDED 2 → 4099-9021	5	ADDRESSABLE SINGLE ACTION NO GRIP PULL STATION	*				
Miscellaneous Peripheral Devices That Require (Additional) System Power							
2098-9737	16	RELAY DPDT 3 AMP		0.0000	0.0000	0.0240	0.3840
ADDED 5 → 2088-9008	4	TRACK MOUNTED SINGLE RELAY SPDT W/ ENCLOSURE		0.0000	0.0000	0.0180	0.0720
4098-9791	16	TRUEALARM SENSOR BASE W/ RELAY DRIVER		0.0003	0.0043	0.0040	0.0640
ADDED 4 → 4098-9860	26	2-WIRE RELAY FOR USE WITH 4098-9780 SENSOR BASE		0.0000	0.0000	0.0000	0.0000
Notification Appliances			Setting				
4902-9721	1	SPEAKER 25V/70VRMS WHITE CEILING		0.0000	0.0000	0.0000	0.0000
ADDED 3 → 4906-9103	3	V/O MC NON-ADDRESS, WHT, WALL	15	0.0000	0.0000	0.0600	0.1800
ADDED 3 → 4906-9104	17	V/O MC NON-ADDRESS, WHT, CEILING	15	0.0000	0.0000	0.0750	1.2750
4906-9104	2	V/O MC NON-ADDRESS, WHT, CEILING	30	0.0000	0.0000	0.1250	0.2500
ADDED 3 → 4906-9105	3	WP V/O MC NON-ADDRESS, RED, WALL	15	0.0000	0.0000	0.0770	0.2310
4906-9113	1	0	15	0.0000	0.0000	0.0000	0.0000
ADDED 2 → 4906-9133	4	0		0.0000	0.0000	0.0000	0.0000
ADDED 1 → 4906-9153	2	S/V M-C NON-ADDRESS, WHT, WALL	110	0.0000	0.0000	0.2520	0.5040
4906-9154	16	S/V M-C NON-ADDRESS, WHT, CEILING	15	0.0000	0.0000	0.0750	1.2000
ADDED 2 → 4906-9154	2	S/V M-C NON-ADDRESS, WHT, CEILING	30	0.0000	0.0000	0.1250	0.2500
ADDED 3 → 4906-9154	3	S/V M-C NON-ADDRESS, WHT, CEILING	75	0.0000	0.0000	0.2330	0.6990
		Peripheral Totals			0.0043		5.1090
		RUI Totals	0		0.0000		0.0000
		Address Totals	276 Addresses		0.2208		0.2760
		System Totals*:	Standby		0.9331	Alarm	9.9550

Constant current draw of .8mA standby and 1mA alarm per address used. Devices requiring additional current are accounted for in the section labeled "Miscellaneous Peripheral Devices Requiring Additional System Power".

* Device Address current draw included below (See Additional Current Draws):

2. Backup Amplifier assumes Main Amplifier alarm current on failure.

Battery Set #1 (Cabinet/Charger #1)			Standby Current	Standby Total	Alarm Current	Alarm Total
Select ALL Power Supplies on this battery set:						
SPS-1				0.4523		3.4740
SPS-2				0.1750		2.3370
Amp-1				0.0850		3.8000
			Sub Total	0.7123		9.6110
Additional Current Draws:						
IDNac Current Boost for 29vdc Regulated Output **						0.0000
RUI Connected Peripheral Devices		0	x 0.0035	= 0.0000	x 0.0035	= 0.0000
MAPNET/IDNet Device Address Communication Current		276	x 0.000800	= 0.2208	x 0.001000	= 0.2760
			Sub Total	0.9331		9.8870
Spare addressable point capacity	0%	0	x 0.0008	= 0.0000	x 0.001	= 0.0000
			Total	0.9331		9.8870
Standby Time =	4	Hrs	x 0.9331	= 3.7325	Standby Ah	
Alarm Time =	15	Min	0.25 x 9.887	= 2.4718	Alarm Ah	
				6.2042		
Additional Spare Battery Capacity =	0%		+	0.0000		
				6.2042		
Battery Discharge Factor =	20%		+	1.2408		
Minimum Battery Required	2081-9274 10AH (2x)			7.4451		
Battery Supplied	2081-9276 33AH (2x)					

* System Totals represent total system current requirements. Those currents may be distributed between multiple battery sets or power supplies as shown above.

VOLTAGE DROP SUMMARY

Plan Circuit	Description		Load	% Drop	Class B Spare Circuit Capacity
SPS1:V1	SPARE	SIG1	0.000A	0.00%	100.00%
SPS1:V2	CKT V2 - SOUTH	SIG2	0.870A	3.59%	71.00%
SPS1:V3	CKT V3 - NORTH	SIG3	1.571A	10.17%	43.34%
			2.441A	Total	

SPS1:V2 — Distributed Load Voltage Drop

Allowable % Drop: 17.9% — Wire Gauge: 12ga — Starting Voltage: 19.5vdc — Ckt Capacity: 3.A

Wire Res. Per Ft.: 0.001930 @ 75° Celsius — Min. Device Voltage: 16.vdc — % Voltage Drop: 3.59%

Device #	PID	Setting	Distance (Feet)	Device Current	Normal Operation Voltage Drop	Voltage At Device
SPS1:V2-1	4906-9104	15cd	23	0.075	0.077	19.42
SPS1:V2-2	4906-9154	15cd	21	0.075	0.142	19.36
SPS1:V2-3	4906-9154	30cd	43	0.125	0.261	19.24
SPS1:V2-4	4906-9154	15cd	18	0.075	0.303	19.20
SPS1:V2-5	4906-9154	15cd	49	0.075	0.401	19.10
SPS1:V2-6	4906-9104	15cd	107	0.075	0.585	18.92
SPS1:V2-7	4906-9104	15cd	10	0.075	0.599	18.90
SPS1:V2-8	4906-9133		66	0.002	0.674	18.83
SPS1:V2-9	4906-9154	75cd	21	0.233	0.698	18.80
SPS1:V2-10	4906-9103	15cd	12	0.060	0.701	18.80
		Totals:	370 Ft.	0.870A		

SPS1:V3 — Distributed Load Voltage Drop

Allowable % Drop: 17.9% — Wire Gauge: 12ga — Starting Voltage: 19.5vdc — Ckt Capacity: 3.A

Wire Res. Per Ft.: 0.001930 @ 75° Celsius — Min. Device Voltage: 16.vdc — % Voltage Drop: 10.17%

Device #	PID	Setting	Distance (Feet)	Device Current	Normal Operation Voltage Drop	Voltage At Device
SPS1:V3-1	4906-9103	15cd	87	0.060	0.528	18.97
SPS1:V3-3	4906-9153	110cd	26	0.252	0.679	18.82
SPS1:V3-4	4906-9105	15cd	47	0.077	0.908	18.59
SPS1:V3-5	4906-9154	30cd	47	0.125	1.122	18.38
SPS1:V3-6	4906-9103	15cd	18	0.060	1.196	18.30
SPS1:V3-7	4906-9105	15cd	25	0.077	1.292	18.21
SPS1:V3-8	4906-9105	15cd	55	0.077	1.487	18.01
SPS1:V3-9	4906-9133		34	0.002	1.598	17.90
SPS1:V3-10	4906-9154	75cd	21	0.233	1.666	17.83
SPS1:V3-11	4906-9154	15cd	38	0.075	1.755	17.74
SPS1:V3-12	4906-9154	75cd	39	0.233	1.835	17.66
SPS1:V3-13	4906-9154	15cd	79	0.075	1.927	17.57
SPS1:V3-14	4906-9104	15cd	40	0.075	1.961	17.54
SPS1:V3-15	4906-9104	15cd	25	0.075	1.976	17.52
SPS1:V3-16	4906-9104	15cd	25	0.075	1.983	17.52
		Totals:	606 Ft.	1.571A		

EXISTING FACP - BATTERY AND VOLTAGE DROP CALCULATION

IDNET CHANNEL M2 — ADDRESSES IN USE: 195 (78%) | SPARE ADDRESSES: 55 (22%) — SWITCH SETTINGS

Address	Device Type	Point Type	Location Description		1	2	3	4	5	6	7	8	
M2-1	PHOTO	SMOKE			X								ON
M2-2	PHOTO	SMOKE				X							ON
M2-3	PHOTO	SMOKE			X	X							ON
M2-4	PHOTO	SMOKE					X						ON
M2-5	PHOTO	SMOKE			X		X						ON
M2-6	PHOTO	SMOKE				X	X						ON
M2-7	PHOTO	SMOKE			X	X	X						ON
M2-8	PHOTO	SMOKE						X					ON
M2-9	PHOTO	LSDUCT	4 FL BY ELECT. 4C01	2-9	X			X					ON
M2-10	PHOTO	LSDUCT	4 FL BY ELECT. 4C01	2-10		X		X					ON
M2-11	PHOTO	SMOKE			X	X		X					ON
M2-12	PHOTO	SMOKE					X	X					ON
M2-13	PHOTO	SMOKE			X		X	X					ON
M2-14	PHOTO	SMOKE				X	X	X					ON
M2-15	PHOTO	SMOKE			X	X	X	X					ON
M2-16	PHOTO	SMOKE							X				ON
M2-17	PHOTO	SMOKE			X				X				ON
M2-18	PHOTO	SMOKE				X			X				ON
M2-19	PHOTO	SMOKE			X	X			X				ON
M2-20	PHOTO	SMOKE					X		X				ON
M2-21	PHOTO	SMOKE			X		X		X				ON
M2-22	PHOTO	SMOKE				X	X		X				ON
M2-23	PHOTO	SMOKE			X	X	X		X				ON
M2-24	PHOTO	SMOKE						X	X				ON
M2-25	PHOTO	SMOKE			X			X	X				ON
M2-26	PHOTO	SMOKE				X		X	X				ON
M2-27	PHOTO	SMOKE			X	X		X	X				ON
M2-28	PHOTO	SMOKE					X	X	X				ON
M2-29	PHOTO	SMOKE			X		X	X	X				ON
M2-30	PHOTO	SMOKE				X	X	X	X				ON
M2-31	PHOTO	SMOKE			X	X	X	X	X				ON
M2-32	PHOTO	SMOKE								X			ON
M2-33	IAM	SUPERV	4 FL BY STAIR	2-33	X					X			ON
M2-34	PHOTO	SMOKE	4 FL BY STAIR	2-34		X				X			ON
M2-35	PHOTO	SMOKE	4 FL BY STAIR	2-35	X	X				X			ON
M2-36	IAM	SUPERV	4 FL BY STAIR	2-36			X			X			ON
M2-37	PHOTO	SMOKE			X		X			X			ON
M2-38	PHOTO	SMOKE				X	X			X			ON
M2-39	PHOTO	SMOKE			X	X	X			X			ON
M2-40	PHOTO	SMOKE						X		X			ON
M2-41	PHOTO	SMOKE			X			X		X			ON
M2-42	PHOTO	SMOKE				X		X		X			ON
M2-43	RIAM	RELAY			X	X		X		X			ON
M2-44	RIAM	RELAY					X	X		X			ON
M2-45	RIAM	RELAY			X		X	X		X			ON
M2-46	RIAM	RELAY				X	X	X		X			ON
M2-47	HEAT	HEAT			X	X	X	X		X			ON
M2-48	HEAT	HEAT							X	X			ON
M2-49	HEAT	HEAT			X				X	X			ON
M2-50	ADRPUL	PULL				X			X	X			ON
M2-51			SPARE	2-51	X	X			X	X			ON
M2-52			SPARE	2-52			X		X	X			ON
M2-53			SPARE	2-53	X		X		X	X			ON
M2-54			SPARE	2-54		X	X		X	X			ON
M2-55			SPARE	2-55	X	X	X		X	X			ON
M2-56			SPARE	2-56				X	X	X			ON
M2-57			SPARE	2-57	X			X	X	X			ON
M2-58			SPARE	2-58		X		X	X	X			ON
M2-59			SPARE	2-59	X	X		X	X	X			ON
M2-60			SPARE	2-60			X	X	X	X			ON
M2-61			SPARE	2-61	X		X	X	X	X			ON
M2-62			SPARE	2-62		X	X	X	X	X			ON
M2-63			SPARE	2-63	X	X	X	X	X	X			ON
M2-64			SPARE	2-64							X		ON
M2-65			SPARE	2-65	X						X		ON
M2-66	RPHOTO	SMOKE	2 FL PEDS 2C03	2-66		X					X		ON
M2-67	PHOTO	SMOKE			X	X					X		ON
M2-68	RPHOTO	SMOKE					X				X		ON
M2-69	RPHOTO	SMOKE			X		X				X		ON
M2-70	PHOTO	SMOKE				X	X				X		ON
M2-71	RPHOTO	SMOKE	2 FL PEDS 2C09	2-71	X	X	X				X		ON
M2-72	PHOTO	SMOKE	2 FL T 2C10	2-72				X			X		ON
M2-73	RPHOTO	SMOKE	2 FL EQUIP. STOR. 2C11	2-73	X			X			X		ON
M2-74			SPARE	2-74		X		X			X		ON
M2-75			SPARE	2-75	X	X		X			X		ON
M2-76			SPARE	2-76			X	X			X		ON
M2-77	PHOTO	SMOKE			X		X	X			X		ON
M2-78	HEAT	HEAT	2 FL T 2C10	2-78		X	X	X			X		ON
M2-79	RPHOTO	SMOKE	2 FL PEDS 2C13	2-79	X	X	X	X			X		ON
M2-80	PHOTO	SMOKE	2 FL PEDS 2C13	2-80					X		X		ON
M2-81	RPHOTO	SMOKE	2 FL PEDS 2C30	2-81	X				X		X		ON
M2-82	PHOTO	SMOKE	2 FL T 2C31	2-82		X			X		X		ON
M2-83	RPHOTO	SMOKE			X	X			X		X		ON
M2-84	PHOTO	SMOKE					X		X		X		ON
M2-85	RPHOTO	SMOKE			X		X		X		X		ON
M2-86	RPHOTO	SMOKE				X	X		X		X		ON
M2-87	RPHOTO	SMOKE			X	X	X		X		X		ON
M2-88	RPHOTO	SMOKE						X	X		X		ON
M2-89	RPHOTO	SMOKE			X			X	X		X		ON
M2-90	RPHOTO	SMOKE				X		X	X		X		ON
M2-91	PHOTO	SMOKE			X	X		X	X		X		ON
M2-92	RPHOTO	SMOKE					X	X	X		X		ON
M2-93	RPHOTO	SMOKE			X		X	X	X		X		ON
M2-94	RPHOTO	SMOKE				X	X	X	X		X		ON
M2-95	RPHOTO	SMOKE			X	X	X	X	X		X		ON
M2-96	RPHOTO	SMOKE								X	X		ON
M2-97	PHOTO	SMOKE			X					X	X		ON
M2-98	RPHOTO	SMOKE				X				X	X		ON
M2-99	RPHOTO	SMOKE			X	X				X	X		ON
M2-100	HEAT	HEAT					X			X	X		ON
M2-101	HEAT	HEAT			X		X			X	X		ON
M2-102	ADRPUL	PULL				X	X			X	X		ON
M2-103	ADRPUL	PULL			X	X	X			X	X		ON
M2-104	RPHOTO	SMOKE						X		X	X		ON
M2-105	RPHOTO	SMOKE			X			X		X	X		ON
M2-106	PHOTO	SMOKE				X		X		X	X		ON
M2-107	PHOTO	SMOKE			X	X		X		X	X		ON
M2-108	RPHOTO	SMOKE					X	X		X	X		ON
M2-109	RPHOTO	SMOKE			X		X	X		X	X		ON
M2-110	PHOTO	SMOKE				X	X	X		X	X		ON
M2-111	PHOTO	SMOKE			X	X	X	X		X	X		ON
M2-112	PHOTO	SMOKE							X	X	X		ON
M2-113	PHOTO	SMOKE			X				X	X	X		ON
M2-114	PHOTO	SMOKE				X			X	X	X		ON
M2-115	PHOTO	SMOKE			X	X			X	X	X		ON
M2-116	PHOTO	SMOKE					X		X	X	X		ON
M2-117	PHOTO	SMOKE			X		X		X	X	X		ON
M2-118	PHOTO	SMOKE				X	X		X	X	X		ON
M2-119	PHOTO	SMOKE			X	X	X		X	X	X		ON
M2-120	PHOTO	SMOKE						X	X	X	X		ON
M2-121	PHOTO	SMOKE			X			X	X	X	X		ON
M2-122			SPARE	2-122		X		X	X	X	X		ON
M2-123			SPARE	2-123	X	X		X	X	X	X		ON
M2-124			SPARE	2-124			X	X	X	X	X		ON
M2-125			SPARE	2-125	X		X	X	X	X	X		ON

IDNET CHANNEL M2 — ADDRESSES IN USE: 195 (78%) | SPARE ADDRESSES: 55 (22%) — SWITCH SETTINGS

Address			Location Description		1	2	3	4	5	6	7	8	
M2-126	PHOTO	SMOKE	2 FL VEST 2C19	2-126		X	X	X	X	X	X		ON
M2-127	IAM	SUPERV	2 FL CORRIDOR 2C58 BY PEDS 2C17	2-127	X	X	X	X	X	X	X		ON
M2-128	PHOTO	SMOKE	2 FL CORRIDOR 2C58 BY PEDS 2C22	2-128								X	ON
M2-129	PHOTO	SMOKE	2 FL CORRIDOR 2C58 BY T. 2C29	2-129	X							X	ON
M2-130	PHOTO	SMOKE	2 FL CORRIDOR 2C59 BY EQUIP.STOR 2C035	2-130		X						X	ON
M2-131	PHOTO	SMOKE	2 FL CORRIDOR 2C56 BY EQUIP.STOR 2C11	2-131	X	X						X	ON
M2-132	PHOTO	SMOKE	2 FL CORRIDOR 2C56 BY T.2C06	2-132			X					X	ON
M2-133	IAM	SUPERV	2 FL CORRIDOR 2C55 BY WLCHR 2C37	2-133	X		X					X	ON
M2-134	RIAM	RELAY	2 FL ELECT. 2C01	2-134		X	X					X	ON
M2-135	RIAM	AHUF	ROOF LEVEL	2-135	X	X	X					X	ON
M2-136	RIAM	AHUF	ROOF LEVEL	2-136				X				X	ON
M2-137	PHOTO	SMOKE	2 FL CORRIDOR 2C58 BY PEDS 2C17	2-137	X			X				X	ON
M2-138	IAM	SUPERV	2 FL ELECT. 2C01	2-138		X		X				X	ON
M2-139			SPARE	2-139	X	X		X				X	ON
M2-140			SPARE	2-140			X	X				X	ON
M2-141			SPARE	2-141	X		X	X				X	ON
M2-142			SPARE	2-142		X	X	X				X	ON
M2-143			SPARE	2-143	X	X	X	X				X	ON
M2-144			SPARE	2-144					X			X	ON
M2-145			SPARE	2-145	X				X			X	ON
M2-146			SPARE	2-146		X			X			X	ON
M2-147			SPARE	2-147	X	X			X			X	ON
M2-148			SPARE	2-148			X		X			X	ON
M2-149			SPARE	2-149	X		X		X			X	ON
M2-150			SPARE	2-150		X	X		X			X	ON
M2-151			SPARE	2-151	X	X	X		X			X	ON
M2-152			SPARE	2-152				X	X			X	ON
M2-153			SPARE	2-153	X			X	X			X	ON
M2-154			SPARE	2-154		X		X	X			X	ON
M2-155			SPARE	2-155	X	X		X	X			X	ON
M2-156			SPARE	2-156			X	X	X			X	ON
M2-157			SPARE	2-157	X		X	X	X			X	ON
M2-158			SPARE	2-158		X	X	X	X			X	ON
M2-159			SPARE	2-159	X	X	X	X	X			X	ON
M2-160			SPARE	2-160						X		X	ON
M2-161	PHOTO	SMOKE	4 FL CORRIDOR 4C60 BY DUMBWAITER 4C38	2-161	X					X		X	ON
M2-162	RIAM	SUPERV	4 FL CORRIDOR 4C60 BY TOILET 4C03	2-162		X				X		X	ON
M2-163	RPHOTO	SMOKE	4 FL PATIENT ROOM 4C02	2-163	X	X				X		X	ON
M2-164	HEAT	HEAT	4 FL TOILET 4C03	2-164			X			X		X	ON
M2-165	RPHOTO	SMOKE	4 FL PATIENT ROOM 4C04	2-165	X		X			X		X	ON
M2-166	HEAT	HEAT	4 FL TOILET 4C05	2-166		X	X			X		X	ON
M2-167	RPHOTO	SMOKE	4 FL PATIENT ROOM 4C06	2-167	X	X	X			X		X	ON
M2-168	HEAT	HEAT	4 FL TOILET 4C07	2-168				X		X		X	ON
M2-169	RPHOTO	SMOKE	4 FL PATIENT ROOM	2-169	X			X		X		X	ON
M2-170	HEAT	HEAT	4 FL TOILET 4C09	2-170		X		X		X		X	ON
M2-171	RPHOTO	SMOKE	4 FL PATIENT ROOM 4C10	2-171	X	X		X		X		X	ON
M2-172	HEAT	HEAT	4 FL TOILET 4C11	2-172			X	X		X		X	ON
M2-173	RPHOTO	SMOKE	4 FL PATIENT ROOM 4C12	2-173	X		X	X		X		X	ON
M2-174	HEAT	HEAT	4 FL TOILET 4C13	2-174		X	X	X		X		X	ON
M2-175	RPHOTO	SMOKE	4 FL PATIENT ROOM 4C14	2-175	X	X	X	X		X		X	ON
M2-176	HEAT	HEAT	4 FL TOILET 4C15	2-176					X	X		X	ON
M2-177	RPHOTO	SMOKE	4 FL PATIENT ROOM 4C16	2-177	X				X	X		X	ON
M2-178	HEAT	HEAT	4 FL TOILET 4C17	2-178		X			X	X		X	ON
M2-179	RPHOTO	SMOKE	4 FL PATIENT ROOM 4C18	2-179	X	X			X	X		X	ON
M2-180	HEAT	HEAT	4 FL TOILET 4C19	2-180			X		X	X		X	ON
M2-181	RPHOTO	SMOKE	4 FL PATIENT ROOM 4C20	2-181	X		X		X	X		X	ON
M2-182	HEAT	HEAT	4 FL TOILET 4C21	2-182		X	X		X	X		X	ON
M2-183	ADRPUL	PULL	4 FL CORRIDOR 4C64 BY VACANT 4C22	2-183	X	X	X		X	X		X	ON
M2-184	PHOTO	SMOKE	4 FL SOLIED LINEN 4C43	2-184				X	X	X		X	ON
M2-185	PHOTO	SMOKE	4 FL TOILET 4C44	2-185	X			X	X	X		X	ON
M2-186	PHOTO	SMOKE	4 FL NURSE STATION 4C52	2-186		X		X	X	X		X	ON
M2-187	PHOTO	SMOKE	4 FL SLEEP ROOM 4C48	2-187	X	X		X	X	X		X	ON
M2-188	PHOTO	SMOKE	4 FL STAFF 4C47	2-188			X	X	X	X		X	ON
M2-189	PHOTO	SMOKE	4 FL NURSE STATION 4C40	2-189	X		X	X	X	X		X	ON
M2-190	RPHOTO	SMOKE	4 FL PATIENT ROOM 4C34	2-190		X	X	X	X	X		X	ON
M2-191	RPHOTO	SMOKE	4 FL EXAM 4C36	2-191	X	X	X	X	X	X		X	ON
M2-192	HEAT	HEAT	4 FL TOILET 4C35	2-192							X	X	ON
M2-193	RPHOTO	SMOKE	4 FL PATIENT ROOM 4C33	2-193	X						X	X	ON
M2-194	HEAT	HEAT	4 FL TOILET 4C31	2-194		X					X	X	ON
M2-195	RPHOTO	SMOKE	4 FL PATIENT ROOM 4C30	2-195	X	X					X	X	ON
M2-196	HEAT	HEAT	4 FL TOILET 4C29	2-196			X				X	X	ON
M2-197	RPHOTO	SMOKE	4 FL PATIENT ROOM 4C27	2-197	X		X				X	X	ON
M2-198	HEAT	HEAT	4 FL TOILET 4C28	2-198		X	X				X	X	ON
M2-199	PHOTO	SMOKE	4 FL EQUIPMENT STORAGE 4C24	2-199	X	X	X				X	X	ON
M2-200	SIGIAM	SIGNAL	4 FL NURSE STATION 4C52	2-200				X			X	X	ON
M2-201	ADRPUL	PULL	4 FL NURSE STATION 4C52	2-201	X			X			X	X	ON
M2-202	SIGIAM	SIGNAL	4 FL NURSE STATION 4C40	2-202		X		X			X	X	ON
M2-203	ADRPUL	PULL	4 FL NURSE STATION 4C40	2-203	X	X		X			X	X	ON
M2-204	PHOTO	LSDUCT	4 FL SLEEP ROOM 4C48	2-204			X	X			X	X	ON
M2-205	PHOTO	LSDUCT	4 FL NURSE STATION 4C52	2-205	X		X	X			X	X	ON
M2-206	RIAM	RELAY	2 FL NURSE STATION 4C52	2-206		X	X	X			X	X	ON
M2-207			SPARE	2-207	X	X	X	X			X	X	ON
M2-208			SPARE	2-208					X		X	X	ON
M2-209			SPARE	2-209	X				X		X	X	ON
M2-210			SPARE	2-210		X			X		X	X	ON
M2-211			SPARE	2-211	X	X			X		X	X	ON
M2-212			SPARE	2-212			X		X		X	X	ON
M2-213			SPARE	2-213	X		X		X		X	X	ON
M2-214			SPARE	2-214		X	X		X		X	X	ON
M2-215			SPARE	2-215	X	X	X		X		X	X	ON
M2-216			SPARE	2-216				X	X		X	X	ON
M2-217			SPARE	2-217	X			X	X		X	X	ON
M2-218			SPARE	2-218		X		X	X		X	X	ON
M2-219	PHOTO	SMOKE	2 FL PLAYROOM 2C32	2-219	X	X		X	X		X	X	ON
M2-220	PHOTO	SMOKE	2 FL BREAK ROOM 2C33	2-220			X	X	X		X	X	ON
M2-221	PHOTO	SMOKE	2 FL T. 2C34	2-221	X		X	X	X		X	X	ON
M2-222	PHOTO	SMOKE	2 FL EQUIP. STOR. 2C35	2-222		X	X	X	X		X	X	ON
M2-223	HEAT	HEAT	2 FL T. 2C42	2-223	X	X	X	X	X		X	X	ON
M2-224	HEAT	HEAT	2 FL PT SHOWER 2C52	2-224						X	X	X	ON
M2-225	PHOTO	SMOKE	2 FL NURSE 2C49	2-225	X					X	X	X	ON
M2-226	SIGIAM	SIGNAL	2 FL NURSE 2C49	2-226		X				X	X	X	ON
M2-227	ADRPUL	PULL	2 FL NURSE 2C49	2-227	X	X				X	X	X	ON
M2-228	PHOTO	SMOKE	2 FL FORMULA 2C48	2-228			X			X	X	X	ON
M2-229	PHOTO	SMOKE	2 FL SOILED UTILITY 2C47	2-229	X		X			X	X	X	ON
M2-230	PHOTO	SMOKE	2 FL EXAM 2C36	2-230		X	X			X	X	X	ON
M2-231	PHOTO	SMOKE	2 FL SLEEP ROOM 2C41	2-231	X	X	X			X	X	X	ON
M2-232	PHOTO	SMOKE	2 FL JAN. 2C40	2-232				X		X	X	X	ON
M2-233	PHOTO	SMOKE	2 FL WLCHR 2C37	2-233	X			X		X	X	X	ON
M2-234	HEAT	HEAT	2 FL PT SHOWER 2C53	2-234		X		X		X	X	X	ON
M2-235	PHOTO	SMOKE	2 FL OFFICE 2C43	2-235	X	X		X		X	X	X	ON
M2-236	PHOTO	SMOKE	2 FL MEDS. 2C51	2-236			X	X		X	X	X	ON
M2-237	PHOTO	SMOKE	2 FL NURSE 2C44	2-237	X		X	X		X	X	X	ON
M2-238	SIGIAM	SIGNAL	2 FL NURSE 2C44	2-238		X	X	X		X	X	X	ON
M2-239	ADRPUL	PULL	2 FL NURSE 2C44	2-239	X	X	X	X		X	X	X	ON
M2-240	PHOTO	SMOKE	2 FL NOURISH 2C50	2-240					X	X	X	X	ON
M2-241	PHOTO	SMOKE	2 FL T. 2C45	2-241	X				X	X	X	X	ON
M2-242	PHOTO	SMOKE	2 FL CLEAN UTILITY 2C46	2-242		X			X	X	X	X	ON
M2-243	PHOTO	SMOKE	2 FL T. 2C04	2-243	X	X			X	X	X	X	ON
M2-244	PHOTO	SMOKE	2 FL CONFERENCE ROOM 2C02	2-244			X		X	X	X	X	ON
M2-245	PHOTO	SMOKE	2 FL ELECT. 2C02.1	2-245	X		X		X	X	X	X	ON
M2-246	RIAM	RELAY	2 FL SLEEP ROOM 2C41	2-246		X	X		X	X	X	X	ON
M2-247			SPARE	2-247	X	X	X		X	X	X	X	ON
M2-248			SPARE	2-248				X	X	X	X	X	ON
M2-249			SPARE	2-249	X			X	X	X	X	X	ON
THRU			SPARE	2-									ON
M2-250			SPARE	2-250		X		X	X	X	X	X	ON

VENTURA COUNTY HEALTH CARE AGENCY

PUBLIC WORKS VENTURA COUNTY

ENGINEERING SERVICES

RASMUSSEN & ASSOCIATES
Architecture
Planning
Interiors
21 S. California Street
Fourth Floor
Ventura, California 93001
(805) 648-1234

Johnson Controls
DISTRICT - 437
1868 PALMA DRIVE, SUITE M
VENTURA, CA 93003
SERVICE: 805-642-0366
PHONE: 805-642-0366
FAX: 805-654-6103

PROFESSIONAL SEALS

LICENSED ARCHITECT JAY LOMAGNO C-20891 12-31-23 STATE OF CALIFORNIA

REGISTERED PROFESSIONAL ENGINEER ROMAN U. REICHER NO. 16681 ELECTRICAL STATE OF CALIFORNIA

PERMIT APPROVAL STAMP

REVIEWED IN ACCORDANCE WITH THE REQUIREMENTS OF T24, CCR
APPROVED
Department of Health Care Access and Information
FACILITIES DEVELOPMENT DIVISION
9/28/2022, 3:17:57 PM
H202495-56-00
Laura Baldrati

PERMIT NO HCAI #H202495-56-00

NO	REVISION	DATE

PUBLIC WORKS PROJECT MANAGER

CONSULTANT PROJECT MANAGER: Jay Lomagno

DRAWN BY: S.LOAIZA — CHECKED BY: M.PAZ

CONSULTANT JOB NO — DATE: 06/20/2022

PROJECT TITLE AND ADDRESS

VENTURA COUNTY MEDICAL CENTER PEDIATRIC UNIT

300 HILLMONT AVE
VENTURA, CA 93003

COUNTY SPEC NUMBER: CP21-04

COUNTY PROJECT NUMBER: P6T20009

COUNTY DWG NO — SHEET 78 OF 89

SHEET TITLE: CALCULATIONS AND SCHEDULES

SHEET NO: FA-601

STANDARD SENSOR BASE

SIMPLEX 4098-9792

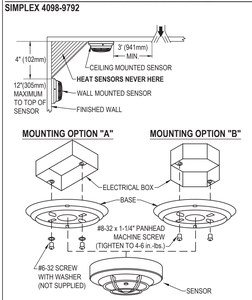

WIRING NOTES

1. MAINTAIN CORRECT POLARITY ON TERMINAL CONNECTIONS.
2. ALWAYS CUT CONDUCTORS AND SECURE UNDER TERMINALS. NEVER LOOP WIRES UNDER TERMINALS.
3. ANY WIRE SPLICES TO BE MADE BY LISTED AND AHJ APPROVED METHODS.

MOUNTING OPTIONS

OPTION [1]	DESCRIPTION	NOTE
A	SINGLE GANG BOX, 2-1/8" (54mm) DEEP - FLUSH MOUNT	BY OTHERS
B	4" (102mm) OCTAGONAL BOX, 1-1/2" (38mm) DEEP, MINIMUM - FLUSH MOUNT	BY OTHERS
C	4" (102mm) SQUARE BOX, 1-1/2" DEEP (MIN) W/ SIMPLEX 4098-9832 ADAPTER KIT	BOX BY OTHERS, 4098-9832 ORDERED SEPARATELY
D	4" (102mm) SQUARE BOX, 1-1/2" DEEP (MIN) W/ SINGLE GANG COVER PLATE 3/4" (19mm) EXTENSION	BY OTHERS

1. FOR ADDITIONAL MOUNTING OPTIONS, DOWNLOAD DATA SHEET 4098-0019 FROM HTTP://WWW.SIMPLEX-FIRE.COM

SENSOR BASE WITH RELAY

SIMPLEX 4098-9780

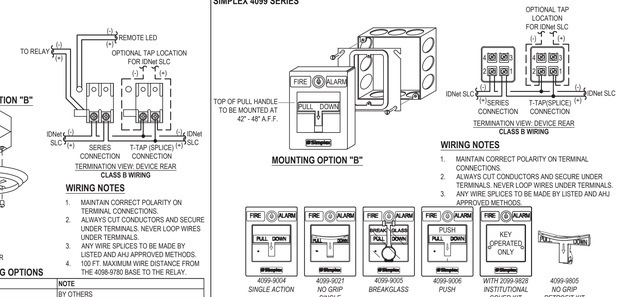

WIRING NOTES

1. MAINTAIN CORRECT POLARITY ON TERMINAL CONNECTIONS.
2. ALWAYS CUT CONDUCTORS AND SECURE UNDER TERMINALS. NEVER LOOP WIRES UNDER TERMINALS.
3. ANY WIRE SPLICES TO BE MADE BY LISTED AND AHJ APPROVED METHODS.
4. 100 FT. MAXIMUM WIRE DISTANCE FROM THE 4098-9780 BASE TO THE RELAY.

MOUNTING OPTIONS

OPTION [1]	DESCRIPTION	NOTE
A	SINGLE GANG BOX, 2-1/8" (54mm) DEEP - FLUSH MOUNT	BY OTHERS
B	4" (102mm) OCTAGONAL BOX, 1-1/2" (38mm) DEEP, MINIMUM - FLUSH MOUNT	BY OTHERS
C	4" (102mm) SQUARE BOX, 1-1/2" DEEP (MIN) W/ SIMPLEX 4098-9832 ADAPTER KIT	BOX BY OTHERS, 4098-9832 ORDERED SEPARATELY
D	4" (102mm) SQUARE BOX, 1-1/2" DEEP (MIN) W/ SINGLE GANG COVER PLATE 3/4" (19mm) EXTENSION	BY OTHERS

1. FOR ADDITIONAL MOUNTING OPTIONS, DOWNLOAD DATA SHEET 4098-0019 FROM HTTP://WWW.SIMPLEX-FIRE.COM
2. SENSOR BASES WITH RELAY MODULES 2098-9737 AND 4098-9822 REQUIRE A 1.5 INCH EXTENSION RING MOUNTED TO THE 4-INCH SQUARE OR OCTAGONAL ELECTRICAL BOX (RELAY MODULE(S) CANNOT BE USED IN SINGLE-GANG ELECTRICAL BOX INSTALLATIONS) TO MEET THE SPACE REQUIREMENT OF THE RELAY CUBE AND ITS WIRES. THE RELAY MODULE 4098-9822 MUST BE INSTALLED IN THE ELECTRICAL BOX DIRECTLY.

ADDRESSABLE PULL STATIONS

SIMPLEX 4099 SERIES

WIRING NOTES

1. MAINTAIN CORRECT POLARITY ON TERMINAL CONNECTIONS.
2. ALWAYS CUT CONDUCTORS AND SECURE UNDER TERMINALS. NEVER LOOP WIRES UNDER TERMINALS.
3. ANY WIRE SPLICES TO BE MADE BY LISTED AND AHJ APPROVED METHODS.

MOUNTING OPTIONS

OPTION [1]	DESCRIPTION	NOTE
A	SINGLE GANG BOX, 2-1/2" (64mm) DEEP	BY OTHERS
B	4" (102mm) SQUARE BOX, 2-1/8" DEEP (MIN) W/ SINGLE GANG COVER PLATE 3/4" (19mm) EXTENSION	BY OTHERS
C	SIMPLEX 2975-9022 - 5H x 3-7/8"W x 2-3/16"D (127mm x 98mm x 56mm)	ORDERED SEPARATELY
D	SIMPLEX 2975-9178 - 5-3/4"H x 3-7/8"W x 2-3/16"D (132mm x 102mm x 56mm)	ORDERED SEPARATELY

1. FOR ADDITIONAL MOUNTING OPTIONS, DOWNLOAD DATA SHEET 4099-0005 FROM HTTP://WWW.SIMPLEX-FIRE.COM

IN-DUCT SMOKE DETECTOR

SIMPLEX 4098-9750 ANALOG 2-WIRE IN-DUCT HOUSING

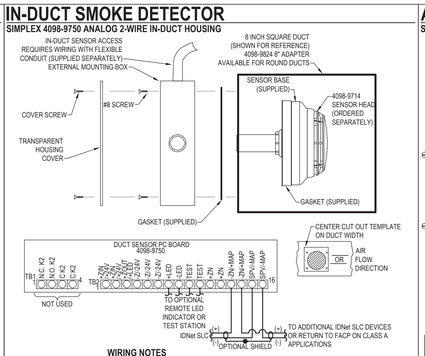

WIRING NOTES

1. MAINTAIN CORRECT POLARITY ON TERMINAL CONNECTIONS.
2. ALWAYS CUT CONDUCTORS AND SECURE UNDER TERMINALS. NEVER LOOP WIRES UNDER TERMINALS.
3. ANY WIRE SPLICES TO BE MADE BY LISTED AND AHJ APPROVED METHODS. CLASS B APPLICATIONS ONLY.

FOR ADDITIONAL DETAILS SEE DATA SHEET 4098-0021 ON HTTP://WWW.SIMPLEX-FIRE.COM

ADDRESSABLE SIGNAL IAM

SIMPLEX 4090-9007

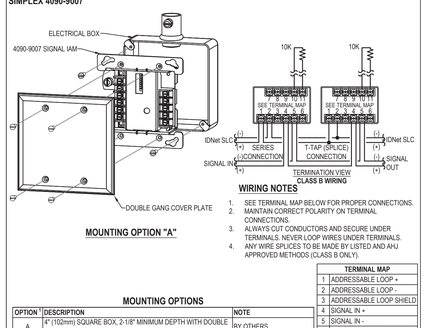

WIRING NOTES

1. SEE TERMINAL MAP BELOW FOR PROPER CONNECTIONS.
2. MAINTAIN CORRECT POLARITY ON TERMINAL CONNECTIONS.
3. ALWAYS CUT CONDUCTORS AND SECURE UNDER TERMINALS. NEVER LOOP WIRES UNDER TERMINALS.
4. ANY WIRE SPLICES TO BE MADE BY LISTED AND AHJ APPROVED METHODS (CLASS B ONLY).

TERMINAL MAP	
1	ADDRESSABLE LOOP +
2	ADDRESSABLE LOOP -
3	ADDRESSABLE LOOP SHIELD
4	SIGNAL IN +
5	SIGNAL IN -
6	SIGNAL IN SHIELD
7	SIGNAL RETURN -
8	SIGNAL RETURN +
9	SIGNAL OUT -
10	SIGNAL OUT +
11	SHIELD

MOUNTING OPTIONS

OPTION [1]	DESCRIPTION	NOTE
A	4" (102mm) SQUARE BOX, 2-1/8" MINIMUM DEPTH WITH DOUBLE GANG COVER PLATE.	BY OTHERS
B	4" (102mm) SQUARE BOX, 2-1/8" MINIMUM DEPTH WITH SIMPLEX 4090-9801 TRIM PLATE FOR SEMI-FLUSH MOUNTED BOX	BOX BY OTHERS, PLATES ORDERED SEPARATELY
C	4" (102mm) SQUARE BOX, 2-1/8" MINIMUM DEPTH WITH SIMPLEX 4090-9802 TRIM PLATE FOR SURFACE MOUNTED BOX	BOX BY OTHERS, PLATES ORDERED SEPARATELY

1. FOR ADDITIONAL MOUNTING OPTIONS, DOWNLOAD DATA SHEET 4090-0010 FROM HTTP://WWW.SIMPLEX-FIRE.COM

DUAL CONTACT RELAY IAM

SIMPLEX 4090-9008

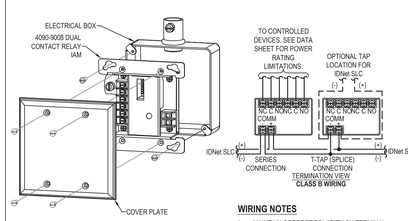

WIRING NOTES

1. MAINTAIN CORRECT POLARITY ON TERMINAL CONNECTIONS.
2. ALWAYS CUT CONDUCTORS AND SECURE UNDER TERMINALS. NEVER LOOP WIRES UNDER TERMINALS.
3. ANY WIRE SPLICES TO BE MADE BY LISTED AND AHJ APPROVED METHODS (CLASS B ONLY).

MOUNTING OPTIONS

OPTION [1]	DESCRIPTION	NOTE
A	4" (102mm) SQUARE BOX, 2-1/8" MINIMUM DEPTH WITH DOUBLE GANG COVER PLATE.	BY OTHERS
B	4" (102mm) SQUARE BOX, 2-1/8" MINIMUM DEPTH WITH SIMPLEX 4090-9801 TRIM PLATE FOR SEMI-FLUSH MOUNTED BOX	BOX BY OTHERS, PLATES ORDERED SEPARATELY
C	4" (102mm) SQUARE BOX, 2-1/8" MINIMUM DEPTH WITH SIMPLEX 4090-9802 TRIM PLATE FOR SURFACE MOUNTED BOX	BOX BY OTHERS, PLATES ORDERED SEPARATELY

1. FOR ADDITIONAL MOUNTING OPTIONS, DOWNLOAD DATA SHEET S4090-0014 FROM HTTP://WWW.SIMPLEX-FIRE.COM

ADDRESSABLE INPUT MODULE

SIMPLEX 4090-9001 (IAM)

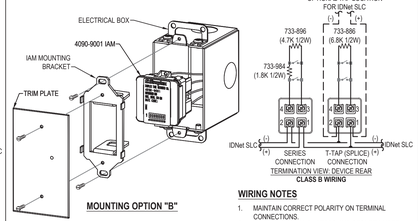

WIRING NOTES

1. MAINTAIN CORRECT POLARITY ON TERMINAL CONNECTIONS.
2. ALWAYS CUT CONDUCTORS AND SECURE UNDER TERMINALS. NEVER LOOP WIRES UNDER TERMINALS.
3. ANY WIRE SPLICES TO BE MADE BY LISTED AND AHJ APPROVED METHODS.

MOUNTING OPTIONS

OPTION [1]	DESCRIPTION	NOTE
A	SINGLE GANG BOX, 2-1/2" (64mm) DEEP WITH SINGLE GANG COVER PLATE	BY OTHERS
B	SINGLE GANG BOX, 2-1/2" (64mm) DEEP WITH SIMPLEX 4090-9810 IAM MOUNTING BRACKET AND SIMPLEX 4090-9806 TRIM PLATE FOR SEMI-FLUSH MOUNTED BOX	BOX BY OTHERS, PLATES ORDERED SEPARATELY
C	SINGLE GANG BOX, 2-1/2" (64mm) DEEP WITH SIMPLEX 4090-9810 IAM MOUNTING BRACKET AND SIMPLEX 4090-9807 TRIM PLATE FOR SURFACE MOUNTED BOX	BOX BY OTHERS, PLATES ORDERED SEPARATELY

1. FOR ADDITIONAL MOUNTING OPTIONS, DOWNLOAD DATA SHEET 4090-0001 FROM HTTP://WWW.SIMPLEX-FIRE.COM

SPDT CONTROL RELAY

SIMPLEX 2088-9008 / APOLLO AMERICA MR-101/C

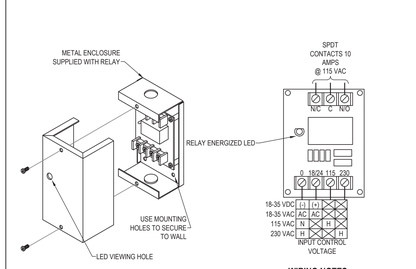

WIRING NOTES

1. MAINTAIN CORRECT POLARITY ON CONNECTIONS.
2. ANY WIRE SPLICES TO BE MADE BY LISTED AND AHJ APPROVED METHODS. CLASS B APPLICATIONS ONLY.

FOR ADDITIONAL DETAILS SEE DATA SHEET 2088-0010 ON HTTP://WWW.SIMPLEX-FIRE.COM

True*Alert* CONVENTIONAL APPLIANCES

SIMPLEX 4906 SERIES CEILING MOUNTED SPEAKER / VISUAL

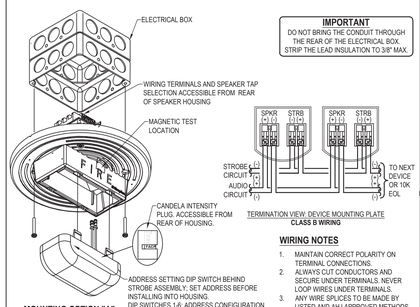

WIRING NOTES

1. MAINTAIN CORRECT POLARITY ON TERMINAL CONNECTIONS.
2. ALWAYS CUT CONDUCTORS AND SECURE UNDER TERMINALS. NEVER LOOP WIRES UNDER TERMINALS.
3. ANY WIRE SPLICES TO BE MADE BY LISTED AND AHJ APPROVED METHODS.

MOUNTING OPTIONS

OPTION [1]	DESCRIPTION	NOTE
A	4" (102mm) SQUARE BOX, 1-1/2" (38mm) DEEP, WITH 1-1/2" (38mm) EXTENSION RING - FLUSH MOUNTING	BY OTHERS

1. FOR ADDITIONAL MOUNTING OPTIONS, DOWNLOAD DATA SHEET 4906-0003 FROM HTTP://WWW.SIMPLEX-FIRE.COM

True*Alert* CONVENTIONAL APPLIANCES

SIMPLEX 4906 SERIES WALL MOUNTED SPEAKER / VISUAL

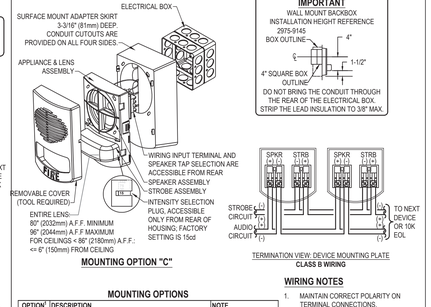

WIRING NOTES

1. MAINTAIN CORRECT POLARITY ON TERMINAL CONNECTIONS.
2. ALWAYS CUT CONDUCTORS AND SECURE UNDER TERMINALS. NEVER LOOP WIRES UNDER TERMINALS.
3. ANY WIRE SPLICES TO BE MADE BY LISTED AND AHJ APPROVED METHODS.

MOUNTING OPTIONS

OPTION [1]	DESCRIPTION	NOTE
A	4" (102mm) SQUARE BOX, 1-1/2" (38mm) DEEP. WITH 1-1/2" (38mm) EXTENSION RING - FLUSH MOUNTING	BY OTHERS
B	SIMPLEX 2975-9145 SURFACE MOUNT BOX WITH SIMPLEX 4905-9903 ADAPTER PLATE	ORDERED SEPARATELY
C	4" (102mm) SQUARE BOX, 1-1/2" (38mm) DEEP, WITH 1-1/2" (38mm) EXTENSION RING - SURFACE MOUNTING	SIMPLEX ADAPTER SKIRT REQUIRED

1. FOR ADDITIONAL MOUNTING OPTIONS, DOWNLOAD DATA SHEET 4906-0003 FROM HTTP://WWW.SIMPLEX-FIRE.COM

True*Alert* CONVENTIONAL APPLIANCES

SIMPLEX 4906 SERIES WEATHERPROOF MULTI-CANDELA VISUAL

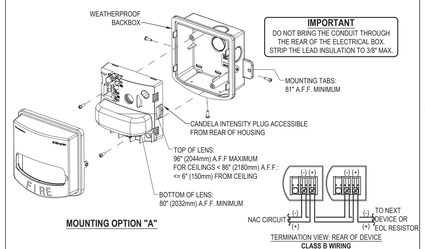

WIRING NOTES

1. MAINTAIN CORRECT POLARITY ON TERMINAL CONNECTIONS.
2. ALWAYS CUT CONDUCTORS AND SECURE UNDER TERMINALS. NEVER LOOP WIRES UNDER TERMINALS.
3. ANY WIRE SPLICES TO BE MADE BY LISTED AND AHJ APPROVED METHODS.

MOUNTING OPTIONS

OPTION [1]	DESCRIPTION	NOTE
A	WEATHERPROOF BOX 1-1/2" DEEP	SIMPLEX 49WPBB-AVVOWR (RED) OR SIMPLEX 49WPBB-AVVOWW (WHITE)

1. FOR ADDITIONAL MOUNTING OPTIONS, DOWNLOAD DATA SHEET 4906-0002 FROM HTTP://WWW.SIMPLEX-FIRE.COM

True*Alert* CONVENTIONAL APPLIANCES

SIMPLEX 4906 SERIES CEILING MOUNTED VISUAL

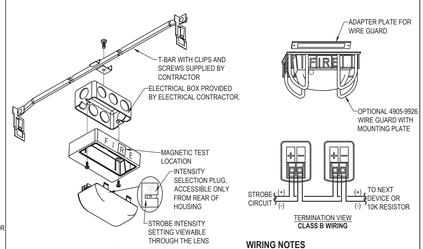

WIRING NOTES

1. MAINTAIN CORRECT POLARITY ON TERMINAL CONNECTIONS.
2. ALWAYS CUT CONDUCTORS AND SECURE UNDER TERMINALS. NEVER LOOP WIRES UNDER TERMINALS.
3. ANY WIRE SPLICES TO BE MADE BY LISTED AND AHJ APPROVED METHODS.

MOUNTING OPTIONS

OPTION [1]	DESCRIPTION	NOTE
A	SINGLE GANG BOX, 2-1/4" (57mm) DEEP (MINIMUM)	BY OTHERS
B	HANDY BOX, 1-1/2" (38mm) DEEP, OR SINGLE GANG BOX 2-1/2" (64mm) DEEP	4905-9910 ADAPTER PLATE REQURED FOR SURFACE MOUNT (WITH HANDY BOX UNLESS USING 4905-9926 WIRE GUARD

1. FOR ADDITIONAL MOUNTING OPTIONS, DOWNLOAD DATA SHEET 4090-0001 FROM HTTP://WWW.SIMPLEX-FIRE.COM

True*Alert* CONVENTIONAL APPLIANCES

SIMPLEX 4906 SERIES WALL MOUNTED VISUAL

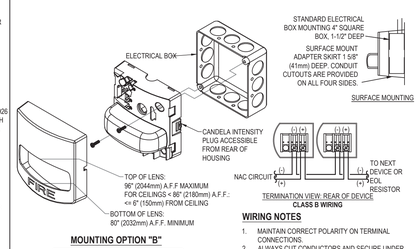

WIRING NOTES

1. MAINTAIN CORRECT POLARITY ON TERMINAL CONNECTIONS.
2. ALWAYS CUT CONDUCTORS AND SECURE UNDER TERMINALS. NEVER LOOP WIRES UNDER TERMINALS.
3. ANY WIRE SPLICES TO BE MADE BY LISTED AND AHJ APPROVED METHODS.

MOUNTING OPTIONS

OPTION [1]	DESCRIPTION	NOTE
A	SINGLE GANG BOX, 1-1/2" (64mm) DEEP	BY OTHERS. WHEN SURFACE MOUNTING USE 4905-9937 (RED) OR 4906-9940 (WHITE) SKIRT
B	4" (102mm) SQUARE BOX, 1-1/2" (38mm) DEEP, MINIMUM	
C	2 GANG BOX, 1-1/2" (38mm) DEEP	
D	SIMPLEX 2975-9145, 7-7/8"H x 5-1/8"W x 2-3/4"D (127mm x 98mm x 56mm) REQUIRES 4905-9931 PLATE	ORDERED SEPARATELY

1. FOR ADDITIONAL MOUNTING OPTIONS, DOWNLOAD DATA SHEET 4906-0002 FROM HTTP://WWW.SIMPLEX-FIRE.COM

REMOTE ALARM INDICATOR / KEY SWITCH

SIMPLEX 2098-9806

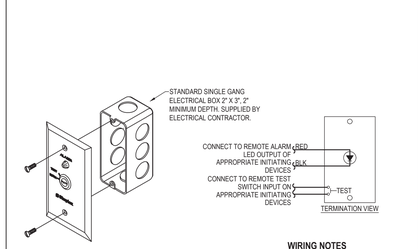

WIRING NOTES

1. MAINTAIN CORRECT POLARITY ON TERMINAL CONNECTIONS.
2. ALWAYS CUT CONDUCTORS AND SECURE UNDER TERMINALS. NEVER LOOP WIRES UNDER TERMINALS.
3. ONE INDICATOR MAY BE INSTALLED PER DETECTOR.

WIRING DETAILS

VENTURA COUNTY HEALTH CARE AGENCY

PUBLIC WORKS VENTURA COUNTY

ENGINEERING SERVICES

RASMUSSEN & ASSOCIATES
Architecture
Planning
Interiors
21 S. California Street
Fourth Floor
Ventura, California 93001
(805) 648-1234

Johnson Controls

DISTRICT - 437
1868 PALMA DRIVE, SUITE M
VENTURA, CA 93003
SERVICE: 805-642-0366
PHONE: 805-642-0366
FAX: 805-654-6103

PROFESSIONAL SEALS

PERMIT APPROVAL STAMP

REVIEWED IN ACCORDANCE WITH THE REQUIREMENTS OF T24, CCR
APPROVED
Department of Health Care Access and Information
FACILITIES DEVELOPMENT DIVISION
9/28/2022, 3:17:57 PM
H202495-56-00
Laura Baldrati

PERMIT NO HCAI #H202495-56-00

NO	REVISION	DATE

PUBLIC WORKS PROJECT MANAGER

CONSULTANT PROJECT MANAGER
Jay Lomagno

DRAWN BY	CHECKED BY
S.LOAIZA	M.PAZ
CONSULTANT JOB NO	DATE
	06/20/2022

PROJECT TITLE AND ADDRESS

VENTURA COUNTY MEDICAL CENTER PEDIATRIC UNIT

300 HILLMONT AVE
VENTURA, CA 93003

COUNTY SPEC NUMBER
CP21-04

COUNTY PROJECT NUMBER
P6T20009

COUNTY DWG NO — SHEET 79 OF 89

SHEET TITLE
WIRING TYPICALS

SHEET NO
FA-701

FAINER PEDIATRIC UNIT NURSE CALL

NURSE CALL SYSTEM

DRAWING INDEX

Sheet List Table

Sheet Number	Sheet Title
NC-001	COVER SHEET
NC-101	2ND FLOOR PARTIAL PLAN

GENERAL NOTES

1. THESE DRAWINGS DEPICT GENERAL LOCATIONS OF LIFE SAFETY EQUIPMENT & FIELD DEVICES. EXACT ROUTING OF CONDUITS IS TO BE DETERMINED IN THE FIELD BY THE INSTALLING CONTRACTOR TO SUIT CONDITIONS. ALL CHANGES SHALL BE CLEARLY INDICATED ON THE RECORD DRAWINGS.
2. SHOULD ANY CONDITIONS EXIST THAT DIFFER FROM WHAT IS INDICATED ON THESE DRAWINGS WHICH CAUSE MAJOR DEVIATIONS IN THE WORK SHOWN, THE CONTRACTOR SHALL CONTACT TYCO JOHNSON CONTROLS IN A TIMELY MANNER SO AS NOT TO IMPAIR THE CONSTRUCTION SCHEDULE.
3. CONTRACTOR IS RESPONSIBLE FOR MAKING AND OBTAINING APPROVAL FOR ALL NECESSARY ADJUSTMENTS IN CIRCUITING AS REQUIRED TO ACCOMMODATE THE RELOCATION OF EQUIPMENT AND/OR DEVICES WHICH ARE AFFECTED BY ANY AUTHORIZED CHANGE. ALL CHANGES SHALL BE CLEARLY INDICATED ON THE RECORD DRAWINGS.
4. THE POWER CIRCUIT TO THE NURSE CALL NCT LOCATIONS SHALL BE ON A DEDICATED 120V, 20A CRITICAL BRANCH CIRCUIT .
5. UPDATE THE AS-BUILT DRAWING SET DAILY WITH JOB PROGRESS. RETURN THE AS-BUILT DRAWING SET TO TYCO JOHNSON CONTROLS NO LATER THAN 7 DAYS AFTER FINAL TEST.
6. THE CONTRACTOR WILL MAINTAIN ALL AREAS OF THE BUILDING IN A NEAT AND WORKMANLIKE MANNER.
7. THE NURSE CALL SYSTEM INSTALLER WILL MAINTAIN THE FIRE RESISTANCE INTEGRITY OF ALL WALL, CEILING, AND ROOF ASSEMBLIES ANY TIME THAT WORK IS NOT ACTIVELY BEING PERFORMED.
8. NURSE CALL CABLE INSTALLED IN THE VERTICAL RUNS AND PENETRATING MORE THAN ONE FLOOR OR CABLES INSTALLED IN VERTICAL RUNS IN SHAFTS SHALL BE TYPE FPLR.
9. NURSE CALL CABLE INSTALLED IN UNDERGROUND CONDUIT OR OTHER WET LOCATIONS SHALL BE UL LISTED FOR WET LOCATIONS.
10. ONLY SYSTEM WIRING CAN BE RUN IN THE SAME CONDUIT.
11. 120VAC IS NOT PERMITTED IN THE SAME CONDUIT WITH LOW VOLTAGE WIRING.
12. MAINTAIN MAXIMUM CONDUIT FILL RATIO AS PER APPLICABLE ELECTRICAL CODES REQUIREMENTS

IMPORTANT NOTICE TO USER: This information may not be sold or transferred to any third party, used on other projects or additions to the project for which it was prepared, or used for completion of this project by any third party. Johnson Controls disclaims all liability for the use or reuse of altered files by the user or any third party and such use will be a user's sole risk. User shall, to the fullest extent permitted by law, defend, indemnify, and hold Johnson Controls harmless from any and all claims for loss, damage or injury arising directly or indirectly from any such unauthorized use.

LEGENDS

NURSE CALL SYMBOL LEGEND

SYMBOL	DESCRIPTION	POWER	MODEL #	BACKBOX TYPE	SUGGESTED MOUNTING
NM	TOUCH CONTROL STATION (TCS) DESK BRACKET (120.3840)	NONE	130.3680	1 Gang	COUNTERTOP (DESK) FLATS 18" AFF
DS	LCD DUTY STATION, 3 BUTTON	NONE	5009-9108	2 Gang	48" AFF
SS	STAFF STATION, AUDIO VISUAL WITH CODE BLUE & EMERG	NONE	5009-9109	3 Gang	48" AFF
D	ROOM CONTROLLER WITH CORRIDOR LIGHT, AUDIO/VISUAL SUB-SCRIPT 'P' INDICATES VANDAL RESISTANT COVER	NONE	130.1230	1 Gang	CEILING OR ABOVE DOOR
D T	ROOM CONTROLLER WITH CORRIDOR LIGHT, TONE/VISUAL SUB-SCRIPT 'P' INDICATES VANDAL RESISTANT COVER	NONE	5009-9801	1 Gang	CEILING OR ABOVE DOOR
C	CORRIDOR ZONE LIGHT SUB-SCRIPT 'P' INDICATES VANDAL RESISTANT COVER	NONE	5009-9803	1 Gang	CEILING OR ABOVE DOOR
SP	SINGLE PATIENT STATION AUDIO/VISUAL W/ CODE BLUE, EMERG, & PILLOW SPEAKER	NONE	5009-9315	3 Gang	48" AFF
DP	DUAL PATIENT STATION AUDIO/VISUAL WITH PILLOW SPEAKER	NONE	5009-9316	3 Gang	48" AFF
EP	EMERGENCY STATION WITH PULLCORD	NONE	5009-9311	1 Gang	72" AFF
EP	EMERGENCY STATION WITH PULLCORD	NONE	5009-9311	1 Gang	30" AFF
A	AUXILIARY INPUT STATION	NONE	5009-9306	1 Gang	48" AFF
NCT	NURSE CALL TERMINAL & CONTROL EQUIPMENT (1 BAY) (INCLUDES P GATEWAY & POWER SUPPLY)	120 VAC (EMERGENCY)	5009-9703	24"W x 22"H x 9.5"D*Deep	48" AFF
RC	PATIENT BED SIDECOM RECEPTACLE	NONE	36963-1 & 5009-9314	1 Gang	18" AFF
TV	TELEVISION CONTROL RECEPTACLE	PER SPEC	PER SPEC	PER SPEC	PER SPEC
	INDICATES END-OF-LINE DEVICE TERMINATED WITH 470-OHM LINE HARNESS ASSEMBLY 120 RESISTOR	NONE		N/A	N/A

ABBREVIATIONS LEGEND

AC = ABOVE CEILING
AFF = ABOVE FINISHED FLOOR
AHJ = AUTHORITY HAVING JURISDICTION
ALM = ALARM
ANN = ANNUNCIATOR
BMS = BUILDING MANAGEMENT SYSTEM
C = CEILING MOUNTED
CD = CANDELA RATING
DET = DETECTOR
DGP = DATA GATHERING PANEL
E = EXISTING TO REMAIN
EOL = END OF LINE
EPO = EMERGENCY POWER OFF
ER = ELEVATOR RECALL
FAA = FIRE ALARM ANNUNCIATOR
FACP = FIRE ALARM CONTROL PANEL
FATC = FIRE ALARM TERMINAL CABINET
FBO = FURNISHED BY OTHERS
FCC = FIRE COMMAND CENTER
FSD = FIRE SMOKE DAMPER
FTR = FIRE ALARM TRANSPONDER
H = HIGH HUMIDITY
HT = HEIGHT
HVAC = HEATING VENTILATION & AIR CONDITIONING
IMS = INFORMATION MANAGEMENT SYSTEM
MAX = MAXIMUM
MIN = MINIMUM
N/A = NOT APPLICABLE
NAC = NOTIFICATION APPLIANCE CIRCUIT
NDU = NETWORK DISPLAY UNIT
NEC = NATIONAL ELECTRIC CODE
NFPA = NATIONAL FIRE PROTECTION ASSOCIATION
NIC = NOT IN CONTRACT
NPU = NETWORK PROCESSING UNIT
NTS = NOT TO SCALE
PAP = PRE-ACTION PANEL
RC = EXISTING TO REMOVE AND COVER
RD = EXISTING DEVICE TO BE RELOCATED
RL = RELOCATED DEVICE
RR = REMOVE EXISTING & REPLACE WITH NEW
SCC = STATUS COMMAND CENTER
SLC = SIGNALING LINE CIRCUIT
SMK = SMOKE
SUPV = SUPERVISORY
TAC = TRUEALERT ADDRESSABLE CONTROLLER
TOS = TOP OF SHAFT
TRBL = TROUBLE
TS = TAMPER SWITCH
TYP = TYPICAL
UON = UNLESS OTHERWISE NOTED
VCC = VOICE COMMAND CENTER
VT = VALVE TAMPER
W = WATTAGE
W/ = WITH
W/O = WITHOUT
WF = WATERFLOW
WG = WIRE GUARD
WP = WEATHERPROOF
XP = EXPLOSION PROOF

JOHNSON CONTROLS CONTACTS

Sales Representative

ROBERT CLINTON
ROBERT.CLINTON@JCI.COM
PHONE:805-642-0366

Drawings Prepared By

ROBBIE SCOTT
ROBBIE.SCOTT@JCI.COM
PHONE:336-841-8550

Drawings Reviewed By

JEFFERY SOMERVILLE
JEFFERY.SOMERVILLE@JCI.COM
PHONE:336-841-8550

PROJECT DIRECTORY

Site

VENTURA COUNTY MEDICAL CENTER
3291 LOMA VISTA RD.
VENTURA, CA

Johnson Controls District - 437

1868 PALMA DRIVE, SUITE M
VENTURA, CA 93003
PHONE: 805-642-0366
FAX: 805-654-8103
SERVICE: 805-642-0366

Owner

VENTURA COUNTY MEDICAL CENTER
3291 LOMA VISTA RD.
VENTURA, CA

SITE MAP

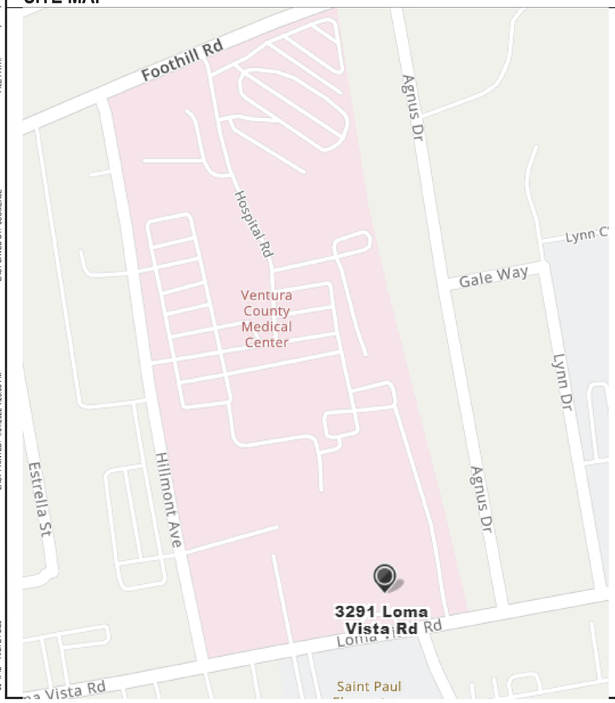

VICINITY MAP

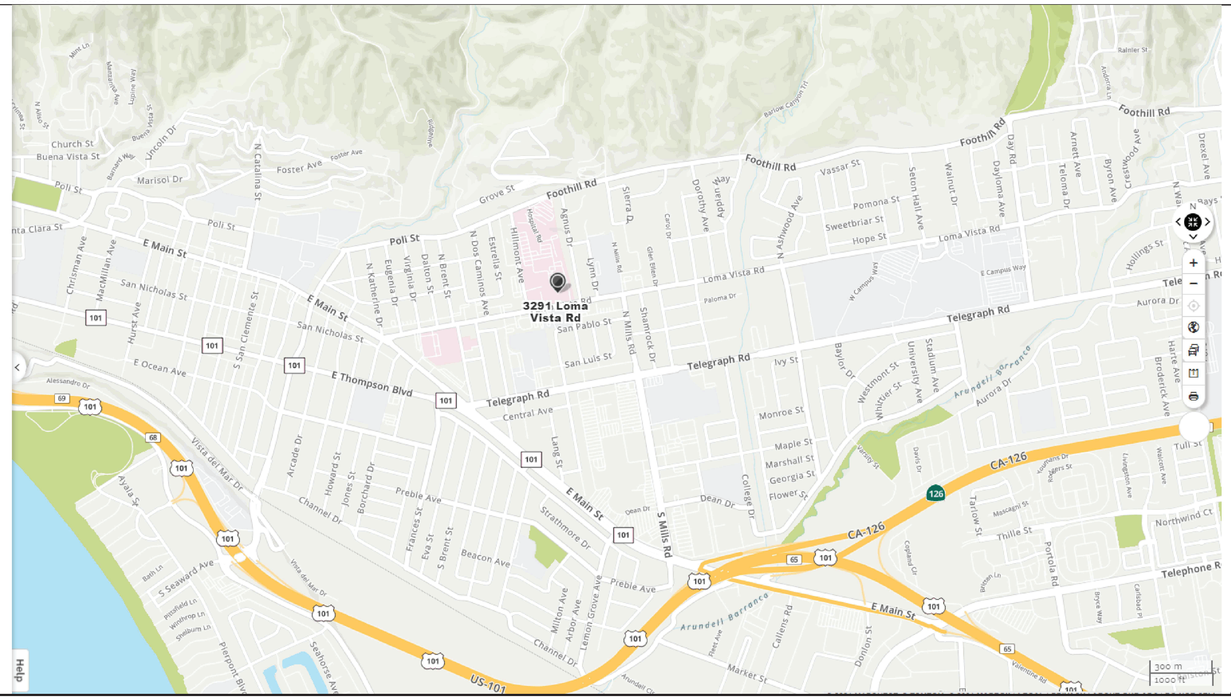

FOR INFORMATION ONLY
DEFERRED APPROVAL
REQUIRED

HCAI PROJECT NUMBER H202495-56-00

REVIEWED IN ACCORDANCE WITH THE REQUIREMENTS OF CBC 1224
Department of Health Care Access and Information
FACILITIES DEVELOPMENT DIVISION
APPROVED
9/28/2022, 3:17:57 PM
H202495-56-00
Laura Baldrati

Johnson Controls
DISTRICT - 437
1868 PALMA DRIVE, SUITE M
VENTURA, CA 93003
SERVICE: 805-642-0366
PHONE: 805-642-0366
FAX: 805-654-8103

REGISTERED PROFESSIONAL ENGINEER
ROHAN REFFERTY
NO. 24681
Exp. 12-31-2022
ELECTRICAL
STATE OF CALIFORNIA

LICENSED ARCHITECT
JAY LOMAGNO
C-20801
Exp. 12-31-22
STATE OF CALIFORNIA

FAINER PEDIATRIC UNIT NURSE CALL
VENTURA COUNTY MEDICAL CENTER
3291 LOMA VISTA RD.
VENTURA, CA

Revisions shown with ▲symbol

ISSUE LOG:

MARK	DATE	CAD	CHK	DESCRIPTION

SUBMITTAL

DRAWN BY:	R.SCOTT
CHECKED BY:	J.SOMERVILLE
ISSUE DATE:	11/23/21
JOB #:	437132899
PROJECT #:	437-650132899

JOHNSON CONTROLS © 2022

SYSTEM:
NURSE CALL SYSTEM

SHEET:
COVER SHEET
89

SHEET 80 of 89

NC-001

FILE PATH: C:\Users\jsomerv\Johnson Controls\Project Electronics - Ventura County Medical Center\VCMC_PEDs_Unit_FAS_NC_Design_650132899\Nurse Call\VCMC_Peds_Unit-650132899 - 2nd\X_System_Dwg\NC-001.dwg
LAST SAVED BY: JSOMERVE
LAST PRINTED: 1/31/2022 4:28:03 PM
30" x 42" Arch E1 Size

© Johnson Controls 2022. All rights reserved. Reuse, copying, modification or alteration of the drawings and other information contained herein is strictly prohibited.

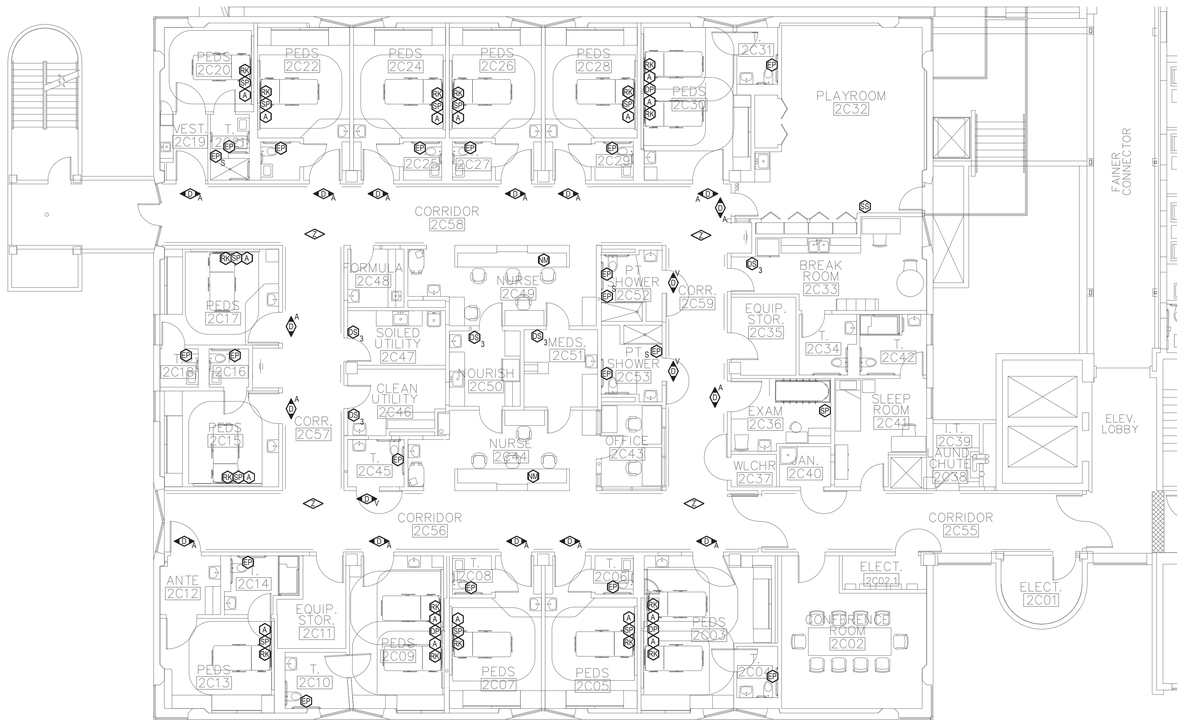

2ND FLOOR PARTIAL PLAN

SCALE:1/8" = 1'-0"

NURSE CALL SYMBOL LEGEND

SYMBOL	DESCRIPTION	POWER	MODEL #	BACKBOX TYPE	SUGGESTED MOUNTING
NM	TOUCH CONTROL STATION (TCS) DESK BRACKET (130.3680)	NONE	130.3680	1 Gang	COUNTERTOP (DESK) PLATE 18" AFF
DS	LCD DUTY STATION, 3 BUTTON	NONE	5009-9106	2 Gang	48" AFF
SS	STAFF STATION, AUDIO VISUAL WITH CODE BLUE & EMERG	NONE	5009-9109	3 Gang	48" AFF
D A	ROOM CONTROLLER WITH CORRIDOR LIGHT, AUDIO/VISUAL SUB-SCRIPT "P" INDICATES VANDAL RESISTANT COVER	NONE	130.1200	1 Gang	CEILING OR ABOVE DOOR
D V	ROOM CONTROLLER WITH CORRIDOR LIGHT, VISUAL SUB-SCRIPT "P" INDICATES VANDAL RESISTANT COVER	NONE	5009-9801	1 Gang	CEILING OR ABOVE DOOR
C	CORRIDOR ZONE LIGHT SUB-SCRIPT "P" INDICATES VANDAL RESISTANT COVER	NONE	5009-9803	1 Gang	CEILING OR ABOVE DOOR
SP	SINGLE PATIENT STATION AUDIO/VISUAL W/ CODE BLUE, EMERG, & PILLOW SPEAKER	NONE	5009-9316	3 Gang	48" AFF
DP	DUAL PATIENT STATION AUDIO/VISUAL WITH PILLOW SPEAKER	NONE	5009-9316	3 Gang	48" AFF
EP	EMERGENCY STATION WITH PULLCORD	NONE	5009-9311	1 Gang	72" AFF
EP	EMERGENCY STATION WITH PULLCORD	NONE	5009-9311	1 Gang	30" AFF
A	AUXILIARY INPUT STATION	NONE	5009-9306	1 Gang	48" AFF
NCT	NURSE CALL TERMINAL & CONTROL EQUIPMENT (1 MAY) (INCLUDES IP GATEWAY & POWER SUPPLY)	120 VAC (EMERGENCY)	5009-9720	24"W x 22"H x 8-0/16"Deep	48" AFF
RN	PATIENT BED SIDECOM RECEPTACLE	NONE	369653-1 & 5009-9314	1 Gang	18" AFF
TV	TELEVISION CONTROL RECEPTACLE	PER SPEC	PER SPEC	PER SPEC	PER SPEC
	INDICATES END-OF-LINE DEVICE TERMINATED WITH END-OF-LINE HARNESS ASSEMBLY 120 RESISTOR	NONE		N/A	N/A

FOR INFORMATION ONLY
DEFERRED APPROVAL
REQUIRED

KEYPLAN

OSHPD-XXX

SCALE:1/8" = 1'-0" IN FEET
0 4' 8' 16'

2ND FLOOR PARTIAL PLAN

SCALE:##########

Johnson Controls
DISTRICT 1-427
1555 HALL AVENUE, SUITE M
VENTURA, CA 93003
SERVICE: 805-642-0366
PHONE: 805-642-0366
FAX: 805-654-8103

REGISTERED PROFESSIONAL ENGINEER
JOHN RETTOLA
No. E-18981
Exp. 12-31-22
ELECTRICAL
STATE OF CALIFORNIA

LICENSED ARCHITECT
JAY LOMAGNO
C-20801
Exp. 12-31-22
STATE OF CALIFORNIA

FAINER PEDIATRIC UNIT NURSE CALL

VENTURA COUNTY MEDICAL CENTER
3291 LOMA VISTA RD.
VENTURA, CA

REVIEWED IN ACCORDANCE WITH THE REQUIREMENTS OF CBC 1224
APPROVED
Department of Health Care Access and Information
FACILITIES DEVELOPMENT DIVISION
9/26/2022 3:17:57 PM
PROJECT: 05-56-00
Lynne Baldrati

ISSUE LOG				
MARK	DATE	CAD	CHK	DESCRIPTION
Revisions shown with △ symbol				

SUBMITTAL

DRAWN BY:	R.SCOTT
CHECKED BY:	J.SOMERVILLE
ISSUE DATE:	11/23/21
JOB #:	437132899
PROJECT #:	437.650132899

JOHNSON CONTROLS © 2022

SYSTEM:
NURSE CALL SYSTEM

SHEET:
2ND FLOOR PARTIAL PLAN

SHEET 81 of 89

NC-101

© Johnson Controls 2022. All rights reserved. Reuse, copying, modification or alteration of the drawings and other information contained herein is strictly prohibited.

FILE PATH: C:\Users\jsomerv\Johnson Controls\Project Electronics - Ventura County Medical Center\VCMC_PEDs_Unit_FAS_NC_Design_650132899\Nurse Call\VCMC_Peds_Unit-650132899 - 2nd X_System_Dwg\NC-101.dwg
LAST SAVED BY: JSOMERVLE
LAST PRINTED: 10/31/2022 1:28:12 PM
30" x 42" - Arch E1 Size

swisslog healthcare

CTS-630
COMPUTERIZED PNEUMATIC TUBE DELIVERY SYSTEM

VENTURA COUNTY MEDICAL CENTER
VENTURA, CA

V05190

☐ APPROVED
☐ APPROVED AS NOTED

Approval of drawings is for concept and compliance with contract documents. Owner has reviewed drawings and is familiar with the project and scope of work. Owner understands that conditions may exist that may require changes in routing and/or equipment locations which may not be shown or reflected in as-built drawings. Approval by Owner does not relieve TransLogic Corp. of its responsibility to meet the requirements of the specifications or contract.

Owners Rep.: _____ Date: _____

DRAWING INDEX:

PT-1.00	MECHANICAL RISER DIAGRAM
PT-2.02	SECOND FLOOR PLAN
PT-3.00	STANDARD SUPPORT DETAILS
PT-3.01	STANDARD STATION DETAILS

VENTURA COUNTY
HEALTH CARE AGENCY

PUBLIC WORKS
VENTURA COUNTY

ENGINEERING SERVICES

RASMUSSEN & ASSOCIATES
Architecture
Planning
Interiors
21 S. California Street
Fourth Floor
Ventura, California 93001
(805) 648-1234

PROFESSIONAL SEALS

LICENSED ARCHITECT JAY LOMAGNO C-20801 STATE OF CALIFORNIA

PROFESSIONAL ENGINEER SANJIV GUPTA E-22-3133 STATE OF CALIFORNIA

PERMIT APPROVAL STAMP

REVIEWED IN ACCORDANCE WITH THE REQUIREMENTS OF T24, CCR
APPROVED
Department of Health Care Access and Information
FACILITIES DEVELOPMENT DIVISION
9/28/2022, 3:17:57 PM
H202495-56-00
Laura Baldrati

PERMIT NO HCAI #H202495-56-00

NO	REVISION	DATE
△		

PUBLIC WORKS PROJECT MANAGER

CONSULTANT PROJECT MANAGER
Jay Lomagno

DRAWN BY	CHECKED BY
R&A	JJL

CONSULTANT JOB NO	DATE
A000495	06/15/2022

PROJECT TITLE AND ADDRESS

VENTURA COUNTY MEDICAL CENTER PEDIATRIC UNIT

300 HILLMONT AVE
VENTURA, CA 93003

COUNTY SPEC NUMBER
CP21-04

COUNTY PROJECT NUMBER
P6T20009

COUNTY DWG NO	SHEET
	82 OF 89

SHEET TITLE

COVER SHEET

SHEET NO
PT-0.00

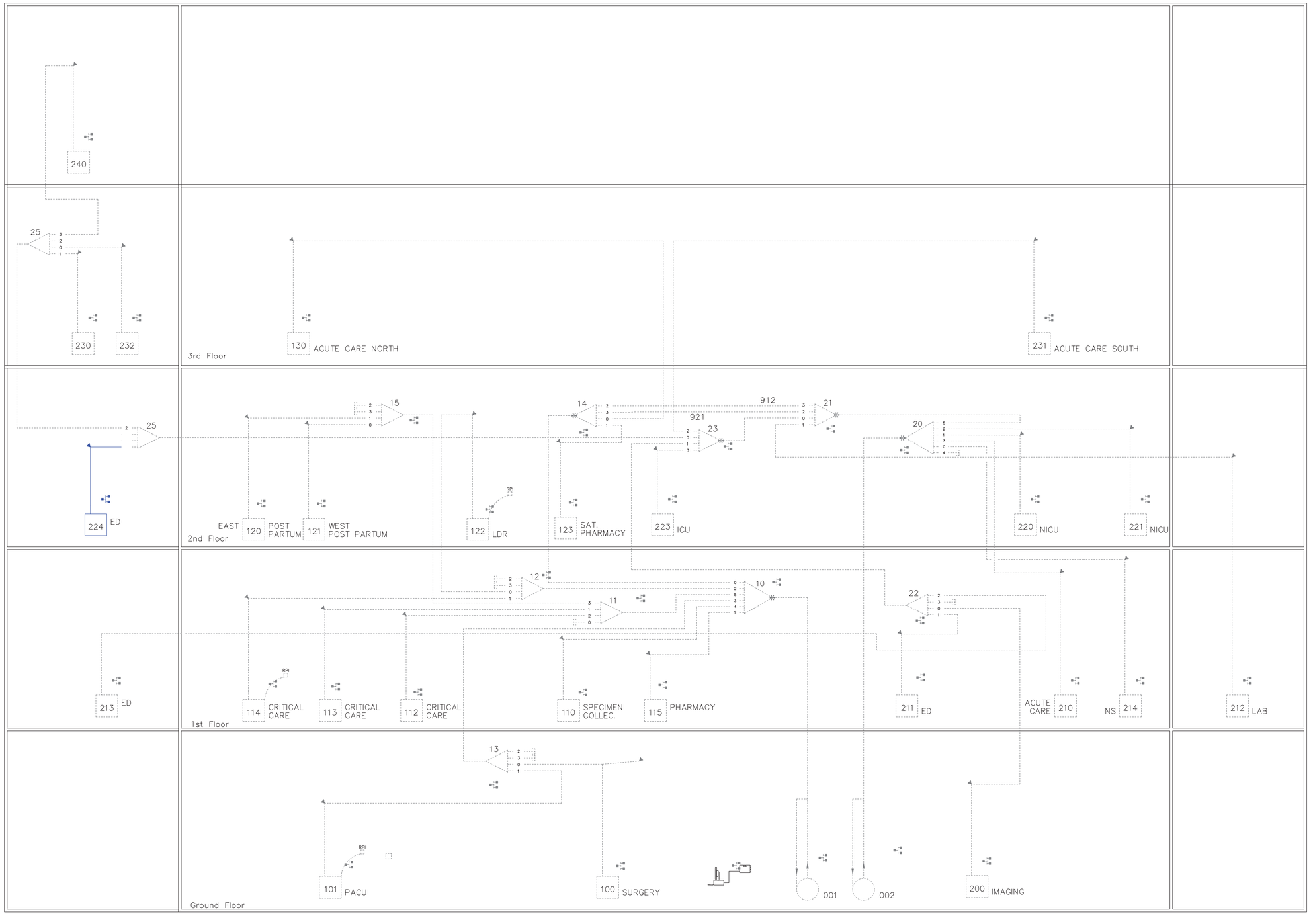

VENTURA COUNTY
HEALTH CARE AGENCY

PUBLIC
VENTURA COUNTY
WORKS

ENGINEERING SERVICES

RASMUSSEN & ASSOCIATES
Architecture
Planning
Interiors

21 S. California Street
Fourth Floor
Ventura, California 93001
(805) 648-1234

PROFESSIONAL SEALS

PERMIT APPROVAL STAMP

REVIEWED IN ACCORDANCE WITH THE REQUIREMENTS OF T24, CCR
APPROVED
Department of Health Care Access and Information
FACILITIES DEVELOPMENT DIVISION
9/28/2022, 3:17:57 PM
H202495-56-00
Laura Baldrati

PERMIT NO HCAI #H202495-56-00

NO	REVISION	DATE
△		

PUBLIC WORKS PROJECT MANAGER

CONSULTANT PROJECT MANAGER
Jay Lomagno

DRAWN BY P&A | CHECKED BY JJL

CONSULTANT JOB NO A000495 | DATE 06/15/2022

PROJECT TITLE AND ADDRESS

VENTURA COUNTY MEDICAL CENTER PEDIATRIC UNIT

300 HILLMONT AVE
VENTURA, CA 93003

COUNTY SPEC NUMBER
CP21-04

COUNTY PROJECT NUMBER
P6T20009

COUNTY DWG NO | SHEET 83 OF 89

SHEET TITLE

MECHANICAL RISER DIAGRAM

SHEET NO
PT-1.00

R:\California\Ventura\Ventura County MC\V05190-V003551E_2nd Floor Station Add\Pre-Sale\Drawings\Proposed Routing\V05190_PT-1.00.dwg Jun 15, 2022-9:12am

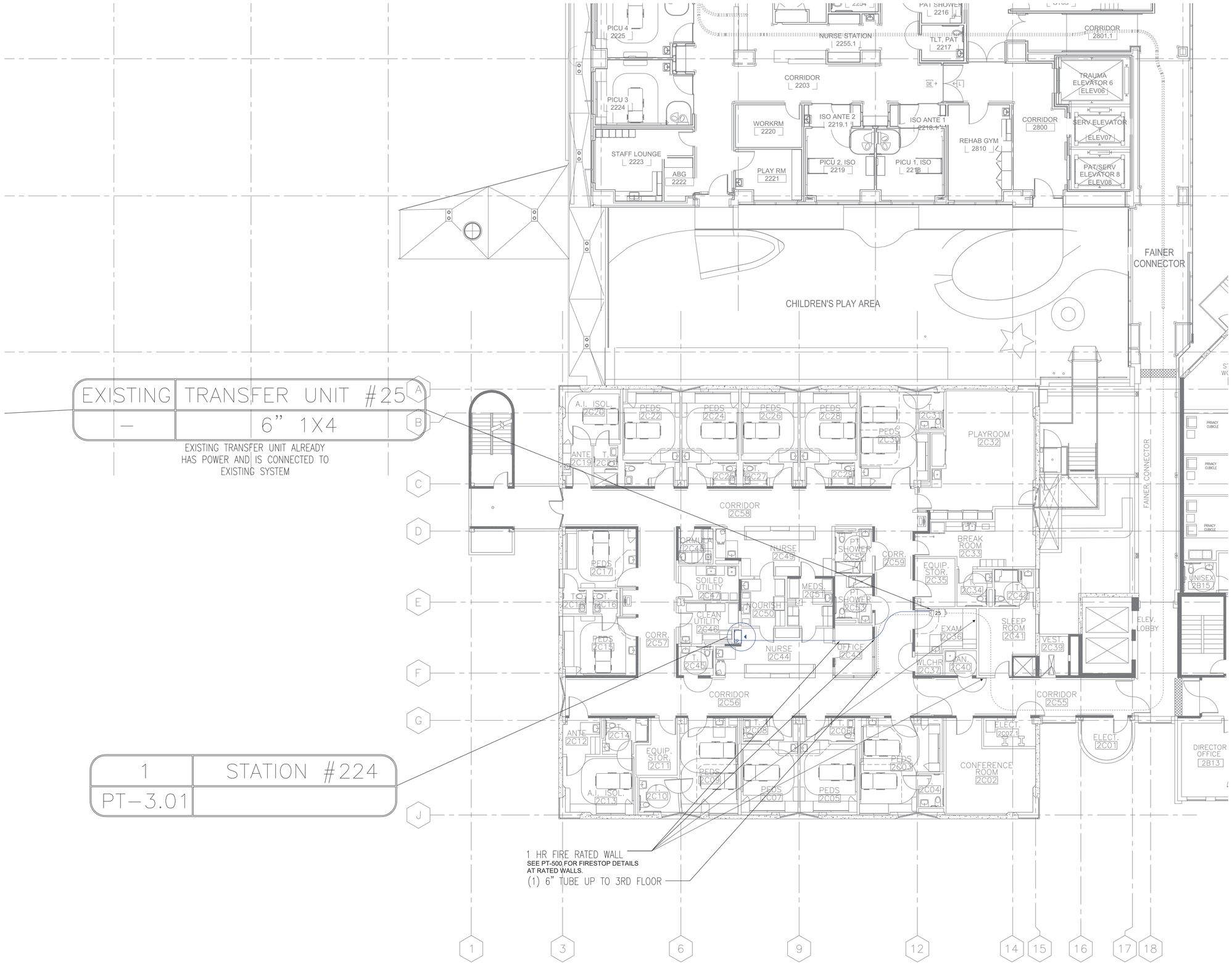

VENTURA COUNTY HEALTH CARE AGENCY

PUBLIC WORKS VENTURA COUNTY

ENGINEERING SERVICES

RASMUSSEN & ASSOCIATES
Architecture
Planning
Interiors
21 S. California Street
Fourth Floor
Ventura, California 93001
(805) 648-1234

PROFESSIONAL SEALS

PERMIT APPROVAL STAMP

REVIEWED IN ACCORDANCE WITH THE REQUIREMENTS OF T24, CCR
APPROVED
Department of Health Care Access and Information
FACILITIES DEVELOPMENT DIVISION
9/28/2022, 3:17:57 PM
H202495-56-00
Laura Baldrati

PERMIT NO HCAI #H202495-56-00

NO	REVISION	DATE

PUBLIC WORKS PROJECT MANAGER

CONSULTANT PROJECT MANAGER
Jay Lomagno

DRAWN BY	CHECKED BY
R&A	JJL
CONSULTANT JOB NO	DATE
A000495	06/15/2022

PROJECT TITLE AND ADDRESS

VENTURA COUNTY MEDICAL CENTER PEDIATRIC UNIT

300 HILLMONT AVE
VENTURA, CA 93003

COUNTY SPEC NUMBER
CP21-04

COUNTY PROJECT NUMBER
P6T20009

COUNTY DWG NO — SHEET 84 OF 89

SHEET TITLE
SECOND FLOOR PLAN

SHEET NO
PT-2.02

R:\California\Ventura\Ventura County MC\V05190-V003551E_2nd Floor Station Add\Pre-Sale\Drawings\Proposed Routing\V05190_PT-2.02.dwg Jun 15, 2022-9:12am

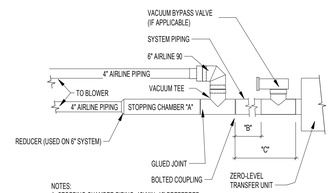

NOTES:
A. STOPPING CHAMBER PIPING: 12' MIN, 15' PREFERRED
1. WHEN USING 4" SYSTEM, 15' REQUIRED BEFORE USING 4" AIRLINE FITTINGS
B. 6' BETWEEN VBV AND VACUUM TEE
C. 6' BETWEEN VACUUM TEE AND ZERO LEVEL TU

9 System Piping

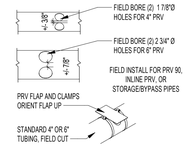

7 Field Bore PRV

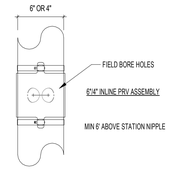

6 Inline PRV

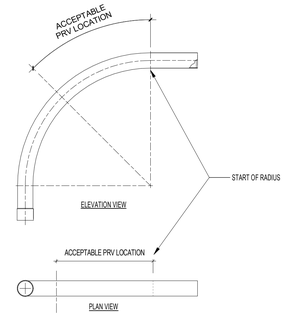

PRV 90

WHEN PRV IS REQUIRED TO BE RELOCATED DUE TO FIELD CONDITIONS, RELOCATE IN UPPER HALF OF BEND.

4 PRV 90

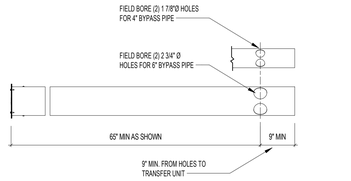

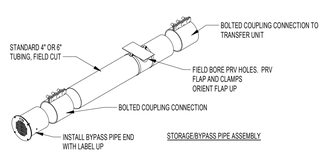

STORAGE/BYPASS PIPE ASSEMBLY

8 Storage/Bypass Pipe

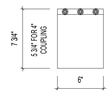

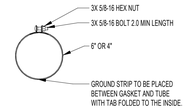

4" & 6" BOLTED COUPLING

5 Bolted Coupling

JOINT INSTALLATION NOTES:

- ENSURE TUBING JOINTS ARE STRAIGHT AND PROVIDE A GOOD SEAL. GAPS BETWEEN PIECES OF TUBING INDICATE THE TUBING IS NOT POSITIONED PROPERLY, AND CAN CAUSE THE OTHER END TO BE OUT OF ALIGNMENT OR CAN CAUSE CARRIERS TO BECOME LODGED.
- ENSURE ALL JOINTS ARE PARALLEL AND COMPLETELY STRAIGHT, AND NO EDGES REMAIN THAT MAY DAMAGE CARRIERS OR INTERFERE IN ANY WAY WITH CARRIER TRAVEL.
- REMOVE ANY BURRS FROM THE ENDS OF THE TUBING WITH A FILE.
- IF FLARING IS REQUIRED FOR A JOINT, ENSURE THE FLARE IS PREPARED BEFORE THE INSTALLATION.
- DRY-FIT EACH JOINT BEFORE APPLYING ADHESIVES OR TAPE, AND MARK THE POINT WHERE THE JOINT IS PROPERLY SEATED. IF A BOLTED COUPLING OR DRIVE SLEEVE IS USED, MARK THE LOCATION OF EITHER END OF THE COUPLING OR SLEEVE TO ENSURE THE JOINT IS PROPERLY CENTERED.
- APPLY ADHESIVES PER MANUFACTURER INSTRUCTIONS. OBSERVE ALL WARNINGS AND INSTRUCTIONS ON THE ADHESIVE LABEL.
- DO NOT PERMIT EXCESS ADHESIVE TO COLLECT ON THE INSIDE OF THE TUBING (AFTER THE JOINT IS SECURED)
- AFTER SECURING THE JOINT, USE A GLUE BRUSH TO WIPE AWAY EXCESS ADHESIVE ON THE OUTSIDE OF THE JOINT
- GLUE AND TAPE ALL SYSTEM TUBE JOINTS FOR A PROPER AIR SEAL. DO NOT GLUE JOINTS WHERE TUBING MEETS EQUIPMENT. ALL EQUIPMENT MUST BE ATTACHED WITH A BOLTED COUPLING TO ENSURE IT IS REMOVABLE FOR SERVICE.
- ENSURE TUBING REMAINS FREE OF ALL OBSTRUCTIONS. CHECK TUBING OR DEBRIS BEFORE MAKING FINAL CONNECTIONS.
- USE METALLIZED TAPE TO HOLD JOINTS TOGETHER WHILE THE ADHESIVE CURES.
- WARNING: NEVER USE HEAT TO RELEASE ADHESIVES. HEATING ADHESIVES MAY EMIT TOXIC FUMES. ONLY USE ADHESIVE REMOVAL METHODS APPROVED BY THE ADHESIVE MANUFACTURER.

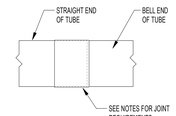

3 Adhesive Joint Connection Detail

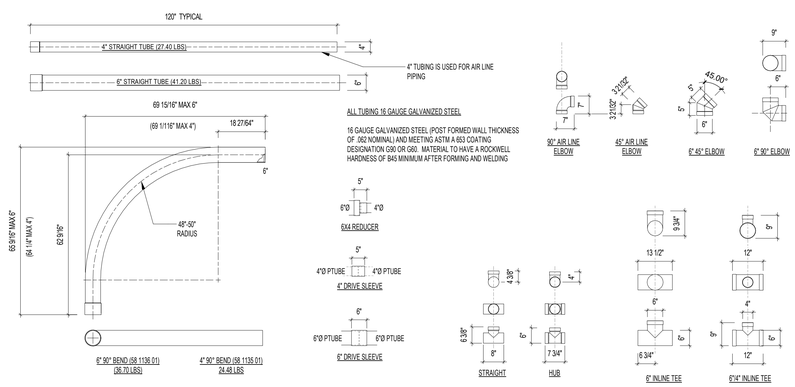

1 Transmission Components

VENTURA COUNTY HEALTH CARE AGENCY

PUBLIC WORKS VENTURA COUNTY WORKS

ENGINEERING SERVICES

RASMUSSEN & ASSOCIATES
Architecture
Planning
Interiors
21 S. California Street
Fourth Floor
Ventura, California 93001
(805) 648-1234

PROFESSIONAL SEALS

LICENSED ARCHITECT JAY LOMAGNO C-20801 REGISTERED PROFESSIONAL ENGINEER STRUCTURAL STATE OF CALIFORNIA

PERMIT APPROVAL STAMP

REVIEWED IN ACCORDANCE WITH THE REQUIREMENTS OF T24, CCR
APPROVED
Department of Health Care Access and Information
FACILITIES DEVELOPMENT DIVISION
9/28/2022, 3:17:57 PM
H202495-56-00
Laura Baldrati

PERMIT NO OSHPD H202495-56-00

NO	REVISION	DATE

PUBLIC WORKS PROJECT MANAGER

CONSULTANT PROJECT MANAGER
Jay Lomagno

DRAWN BY R&A	CHECKED BY JJL
CONSULTANT JOB NO A000495	DATE 06/15/2022

PROJECT TITLE AND ADDRESS

VENTURA COUNTY MEDICAL CENTER PEDIATRIC UNIT

300 HILLMONT AVE
VENTURA, CA 93003

COUNTY SPEC NUMBER
CP21-04

COUNTY PROJECT NUMBER
P6T20009

COUNTY DWG NO — SHEET 85 OF 89

SHEET TITLE
TUBING & SUPPORT DETAILS

SHEET NO
PT-3.00

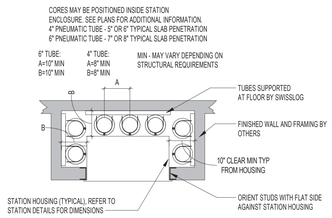

5 Station Furring Options

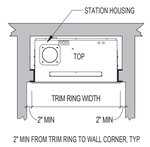

4 Trim Ring Inside Corner Detail

SIZE	A	B	C	D	E	F
4"	26 1/8"	4 7/8"	28 3/4"	11' 10 1/8"	28"	26 1/4"
6"	32 1/8"	5 7/8"	34 3/4"	11' 8 1/8"	36"	32 1/2"

A = STATION HOUSING WIDTH
B = STATION HOUSING EDGE TO CENTER OF NIPPLE
C = TRIM RING WIDTH
D = FLOOR TO TOP OF PRV BEND *NOTE 1
E = CLEAR STATION ENCLOSURE WIDTH
F = ENCLOSURE ROUGH OPENING WIDTH

NOTE 1: VARIES PER FIELD CONDITIONS/CEILING HEIGHT
X'-X" MIN, X'-X" PREFERRED

CORES MAY BE POSITIONED INSIDE STATION ENCLOSURE. SEE PLANS FOR ADDITIONAL INFORMATION.

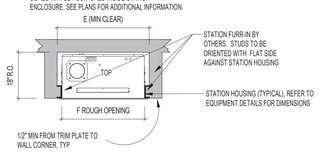

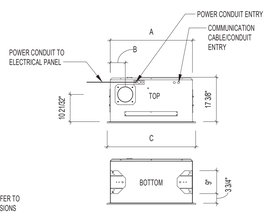

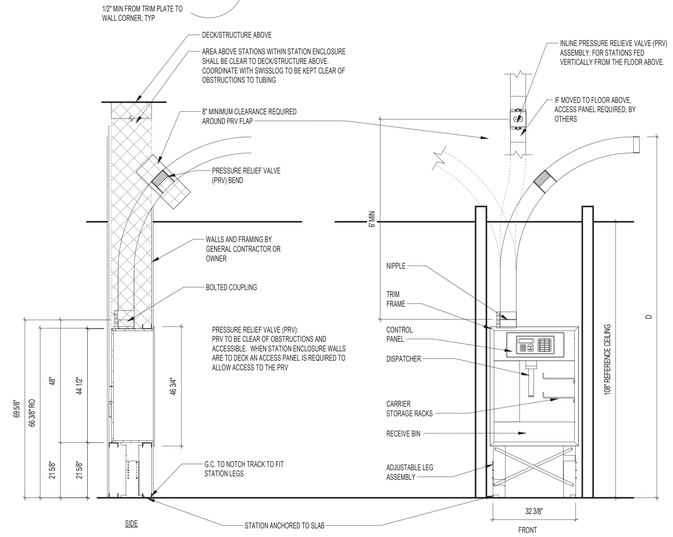

1 Recessed Station

STATION SPECIFICATIONS

Power provided to the station by others.

POWER REQUIREMENTS

110 VAC, 1 Ph, 3A, dedicated unswitched circuit, terminated inside the station-supplied duplex outlet.

Ultra Station: (2) station-supplied duplex outlets. (2) Data drops Swisslog recommends that each Ultra Station Port be placed on separate circuits.

CONTROL REQUIREMENTS

Ethernet Standard Protocol. Data drop required landed in each station housing, by others.

ENVIRONMENTAL REQUIREMENTS

Operating Temperature: 0° to 100° F
Storage Temperature: -20° to 180° F
Relative Humidity: 0% to 90%

Ultra Stations may have two (2) 6" nipples, two (2) 4" nipples, or one each of 6" and 4" nipples.

Weights:
Recessed/Nexus Station: 6" 240 lbs / 4" 200 lbs
Nexus Station: 6" 500 lbs
Ultra Station: 375 lbs
Countertop Station: 150 lbs transmitted to countertop
Wall Mount: 150 lbs transmitted to floor through vertical supports

Station Enclosure Framing:
Wall framing and GWB around station enclosure to stop above ceiling to allow access to Pressure Relief Valve (PRV). If wall(s) are required to go to deck, stop GWB above ceiling. If GWB also needs to go to deck, access panel required to access PRV. Access panel provided and installed by others

VENTURA COUNTY HEALTH CARE AGENCY

PUBLIC VENTURA COUNTY WORKS

ENGINEERING SERVICES

RASMUSSEN & ASSOCIATES
Architecture
Planning
Interiors
21 S. California Street
Fourth Floor
Ventura, California 93001
(805) 648-1234

PROFESSIONAL SEALS

PERMIT APPROVAL STAMP

REVIEWED IN ACCORDANCE WITH THE REQUIREMENTS OF T24, CCR
APPROVED
Department of Health Care Access and Information
FACILITIES DEVELOPMENT DIVISION
9/28/2022, 3:17:57 PM
H202495-56-00
Laura Baldrati

PERMIT NO HCAI #H202495-56-00

NO	REVISION	DATE
△		

PUBLIC WORKS PROJECT MANAGER

CONSULTANT PROJECT MANAGER Jay Lomagno

DRAWN BY	CHECKED BY
R&A	JJL
CONSULTANT JOB NO A000495	DATE 06/15/2022

PROJECT TITLE AND ADDRESS

VENTURA COUNTY MEDICAL CENTER PEDIATRIC UNIT

300 HILLMONT AVE
VENTURA, CA 93003

COUNTY SPEC NUMBER CP21-04

COUNTY PROJECT NUMBER P6T20009

COUNTY DWG NO | SHEET 86 OF 89

SHEET TITLE

STATION DETAILS

SHEET NO PT-3.01

NOTE TO FIRE MARSHALL:

1. THE TRANSLOGIC PNEUMATIC TUBE STATION DESIGN INCORPORATES A UNIQUE SLIDE PLATE WHICH RESTS IN A CLOSED POSITION. THE SLIDE PLATE SEALS OFF THE END OF THE TUBE TO CREATE AN AIR CUSHION FOR ANY INCOMING CARRIER. UPON RECEIPT OF A CARRIER, THE PLATE IS PULLED BACK BY AN ELECTRIC MOTOR AND IS THEN CLOSED AFTER THE CARRIER DROPS INTO THE RECEIVING BIN IN THE STATION.
2. THE SLIDE PLATE MOTOR IS DRIVEN BY A CIRCUIT BOARD MOUNTED IN THE LOGIC CONTROL COMPARTMENT OF THE STATION. IF THERE IS A POWER LOSS, THE PTS COMPUTER CONTROL CENTER WOULD DETECT A COMMUNICATIONS FAILURE AND TRIGGER AN ALARM.
3. WHEN A CARRIER IS BEING TRANSPORTED TO A STATION, THE STATION IS UNDER POSITIVE PRESSURE, FORCING THE CARRIER INTO THE STATION. NEGATIVE PRESSURE OR VACUUM IS ONLY PRESENT FOR A MATTER OF SECONDS WHEN A CARRIER IS BEING DISPATCHED. THIS TRANSACTION REQUIRES THAT THE USER PHYSICALLY PLACE THE CARRIER IN THE DISPATCHER AND PRESS THE SEND BUTTON TO ACTIVATE THE SYSTEM.
4. NO AIR FLOWS THROUGH THE STATION EXCEPT AS DESCRIBED ABOVE.
5. THE SYSTEM CAN BE AUTOMATICALLY SHUT DOWN IF DESIRED, WHEN A SMOKE DETECTOR IS ACTIVATED. TO DO SO REQUIRES THE FACILITY TO LINK THE DRY CONTACTS AT THE BLOWER MOTOR TO A SMOKE DETECTOR. THIS SAFETY MEASURE ENSURES THAT NO SMOKE WILL BE VACUUMED INTO THE SYSTEM.

System No. C-AJ-1597

CAJ 1597

Classified by Underwriters Laboratories, Inc. to UL 1479 and CAN/ULC-S115

ANSI/UL1479 (ASTM E814)	CAN/ULC S115
F Rating — 3Hr	F Rating — 3 Hr
T Ratings — 2 and 2-3/4 Hr (See Item 3C)	FT Ratings — 2 and 2-3/4 Hr (See Item 3C)
L Rating At Ambient — Less Than 1 CFM/sq ft	FH Rating — 3 Hr
L Rating At 400 F — Less Than 1 CFM/sq ft	FTH Ratings — 2 and 2-3/4 Hr (See Item 3C)
	L Rating At Ambient — Less Than 1 CFM/sq ft
	L Rating At 400 F — Less Than 1 CFM/sq ft

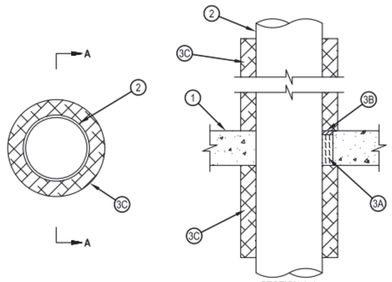

SECTION A-A

1. Floor or Wall Assembly — Min 4-1/2 in. (114 mm) thick reinforced lightweight or normal weight (100-150 pcf or 1600-2400 kg/m3) concrete. Wall may also be constructed of any UL Classified Concrete Blocks*. Floor may also be constructed of any UL Classified Precast Concrete Units*. Max diam of opening 10 in. (254 mm). Max diam of opening in floor constructed of hollow-core precast concrete units is 7 in. (178 mm).
See Concrete Blocks (CAZT) and Precast Concrete Units (CFTV) categories in Fire Resistance Directory for names of manufacturers.
2. Through-Penetrant — One metallic pipe, conduit or tubing installed concentrically or eccentrically within opening. Annular space between penetrant and periphery of opening shall be min 0 in. (0 mm, point contact) to max 2 in. (51 mm). Penetrant to be rigidly supported on both sides of floor or wall assembly. The following types and sizes of penetrants may be used:
   A. Steel Pipe — Nom 8 in. (203 mm) diam (or smaller) Schedule 10 (or heavier) steel pipe.
   B. Iron Pipe — Nom 8 in. (203 mm) diam (or smaller) cast or ductile iron pipe.
   C. Copper Tubing — Nom 4 in. (102 mm) diam (or smaller) Type L (or heavier) copper tubing.
   D. Copper Pipe — Nom 4 in. (102 mm) diam (or smaller) Regular (or heavier) copper pipe.
   E. Conduit — Nom 6 in. (152 mm) diam (or smaller) steel conduit or nom 4 in. (102 mm) diam (or smaller) steel electrical metallic tubing (EMT).

Hilti Firestop Systems

Reproduced by HILTI, Inc. Courtesy of Underwriters Laboratories, Inc. January 08, 2015

UL/cUL SYSTEM NO. W-L-7130
MECHANICAL SUPPORT MEMBERS THROUGH GYPSUM WALL SSEMBLY

F-RATING = 1-HR. OR 2-HR.
T-RATING = 0-HR.

WL7130b 011415

FRONT VIEW — SECTION A-A

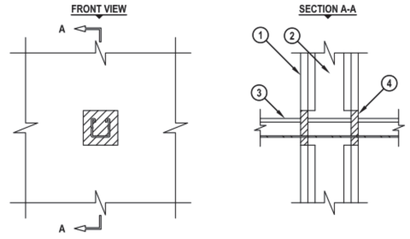

1. GYPSUM WALL ASSEMBLY (UL CLASSIFIED U300, U400 OR V400 SERIES) (1-HR. OR 2-HR. FIRE-RATING) (2-HR. SHOWN).
2. [NOT SHOWN] WOOD STUDS TO CONSIST OF NOMINAL 2" x 4" LUMBER. STEEL STUDS TO BE MINIMUM 2-1/2" WIDE.
3. PENETRATING ITEM TO BE ONE OF THE FOLLOWING :
   A. MAXIMUM 1-5/8" x 1-5/8" GALVANIZED OR PAINTED STEEL CHANNEL STRUT (MINIMUM 0.105" THICK).
   B. MAXIMUM 3-1/4" x 1-5/8" GALVANIZED OR PAINTED STEEL "H" STRUT (MINIMUM 0.105" THICK).
   C. MAXIMUM 3/8" DIAMETER UNJACKETED GALVANIZED STEEL CABLE.
   D. MAXIMUM 1" DIAMETER GALVANIZED THREADED STEEL ROD.
   E. MAXIMUM 2" x 2" x 1/8" THICK STEEL ANGLE.
4. MINIMUM 5/8" DEPTH HILTI FS-ONE MAX OR FS-ONE INTUMESCENT FIRESTOP SEALANT OR HILTI CP 606 FLEXIBLE FIRESTOP SEALANT.

NOTES : 1. MAXIMUM SIZE OF OPENING = 5" x 3" [OR MAXIMUM 3" DIAMETER].
2. ANNULAR SPACE = MINIMUM 1/8", MAXIMUM 7/8".
3. PENETRANT MAY BE INSTALLED AT AN ANGLE NOT GREATER THAN 45° FROM PERPENDICULAR.
4. WHEN HILTI CP 606 FLEXIBLE FIRESTOP SEALANT IS USED ON AN ANGLED PENETRANT THROUGH A 2-HR FIRE RATED WALL, FIRMLY PACK 1/2" THICKNESS OF MINERAL WOOL (MIN. 4 PCF DENSITY) INTO OPENING AS A PERMANENT FORM.

Hilti Firestop Systems — HILTI, Inc. Tulsa, Oklahoma USA (800) 879-8000

Sheet	1 of 1
Scale	3/16" = 1"
Date	Jan. 14, 2015
Drawing No.	WL 7130b

Saving Lives through Innovation and Education

5 Unistrut W-L-7130b
12" = 1'-0"

System No. C-AJ-1597

CAJ 1597

3. Firestop System — The details of the firestop system shall be as follows:
   A. Packing Material — Min 4 in. (102 mm) thickness of min 4 pcf (64 kg/m3) mineral wool batt insulation firmly packed into opening as a permanent form. In floors constructed of precast concrete units, packing material to be flush with bottom of floor. Packing material to be recessed from top surface of floor or from both surfaces of wall to accommodate the required thickness of fill material.
   B. Fill, Void or Cavity Materials* - Sealant — Min 1/2 in. (13 mm) thickness of sealant or putty applied within the annulus, flush with top surface of floor or with both surfaces of wall. At point contact, apply min 1/4 in. (6 mm) bead at penetrant/concrete interface on top surface of floor or both surfaces of wall.
   HILTI CONSTRUCTION CHEMICALS, DIV OF HILTI INC — FS-ONE Intumescent Sealant, FS-ONE MAX Intumescent Sealant, CFS-S SIL GG Sealant, CFS-S SIL SL Sealant (floors only) or CP 604 Sealant (floors only).
   C. Duct Wrap Materials** — Nom 1-1/2 in. or 2 in. (38 or 51 mm) thick blanket, faced on one side or two with a foil facing. The pipes shall be wrapped with one layer of duct wrap. Duct wrap is to extend a minimum of 36 in. (914 mm) from top surface of floor or both sides of wall assembly and a min of 12 in. (305 mm) from the bottom of the floor. The ends are to be tightly butted together and taped on top side of floor and both sides of wall. The exposed edges of the faced blankets are taped with 4 in. (102 mm) wide pressure-sensitive aluminum foil tape. On the bottom surface of the floor ends are to be tightly butted together and wire bound. The T, FT and FTH Ratings are 2 hr when nom 1-1/2 in. (38 mm) thick blanket is used. The T, FT and FTH Ratings are 2 3/4 hr when nom 2 in. (51 mm) thick blanket is used.
   THERMAL CERAMICS INC — FireMaster FastWrap XL
   UNIFRAX I L L C — FyreWrap Duct Insulation, FyreWrap Duct 1.5 Insulation

* Indicates such products shall bear the UL or cUL Certification Mark for jurisdictions employing the UL or cUL Certification (such as Canada), respectively.

Hilti Firestop Systems

Reproduced by HILTI, Inc. Courtesy of Underwriters Laboratories, Inc. January 08, 2015

8 C-AJ-1597
12" = 1'-0"

SYSTEM NO. C-AJ-1380

ANSI/UL1479 (ASTM E814)	CAN/ULC S115
F Rating - 2 Hr	F Rating - 2 Hr
T Rating - 0 Hr	FT Rating - 0 Hr
L Rating at Ambient - Less Than 1 CFM/sq ft	FH Rating - 2 Hr
L Rating at 400 F - 4 CFM/sq ft	FTH Rating - 0 Hr
	L Rating at Ambient - Less Than 1 CFM/sq ft
	L Rating at 400 F - 4 CFM/sq ft

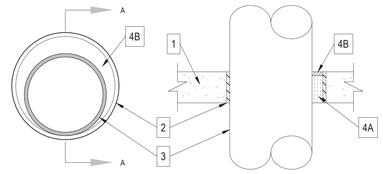

SECTION A-A

1. Floor or Wall Assembly — Min 21/2 in. (64 mm) thick reinforced lightweight or normal weight (100150 pcf or 16002400 kg/m3) concrete. Wall may also be constructed of any UL Classified Concrete Blocks*. Max diam of opening is 31-7/8 in. (810 mm).
See Concrete Blocks (CAZT) in the Fire Resistance Directory for names of manufacturers.
2. Metallic Sleeve — (Optional) Nom 32 in. (813 mm) diam (or smaller) Schedule 40 steel pipe cast or grouted into floor or wall assembly, flush with floor or wall surfaces.
3. ThroughPenetrant — One metallic pipe or conduit to be installed either concentrically or eccentrically within the firestop system. Pipe or conduit to be rigidly supported on both sides of floor assembly. The annular space between pipe or conduit and periphery of opening shall be min 0 in. (point contact) to max 1-7/8 in. (48 mm). The following types and sizes of metallic pipes or conduits may be used:
A. Steel Pipe — Nom 30 in. (762 mm) diam (or smaller) Schedule 10 (or heavier) steel pipe.
B. Cast Iron Pipe — Nom 30 in. (762 mm) diam (or smaller) cast or ductile iron pipe.
C. Copper Pipe — Nom 6 in. (152 mm) diam (or smaller) Regular (or heavier) copper pipe.
D. Copper Tubing — Nom 6 in. (152 mm) diam (or smaller) Type L (or heavier) copper tubing.
E. Conduit — Nom 6 in. (152 mm) diam (or smaller) steel conduit.
F. Conduit — Nom 4 in. (102 mm) (or smaller) steel electrical metallic tubing (EMT).
4. Firestop System — The firestop system shall consist of the following:
A. Packing Materials — Min 2 in. (51 mm) thickness of min 4 pcf (64 kg/m3) mineral wool batt insulation firmly packed into opening as a permanent form. Packing material to be recessed from top surface of floor to accommodate the required thickness of fill material.
B. Fill Void or Cavity Materials* Sealant — Min 1/2 in. (13 mm) thickness of fill material applied within annulus, flush with top surface of floor. At point contact, a min 1/2 in. (13 mm) diam bead of fill material shall be applied at the concrete/sleeve/pipe interface on the top surface of the floor and both surfaces of wall.
HILTI CONSTRUCTION CHEMICALS, DIV OF HILTI INC — FSONE Sealant or FSONE MAX Intumescent Sealant

* Indicates such products shall bear the UL or cUL Certification Mark for jurisdictions employing the UL or cUL Certification (such as Canada), respectively.

4 Floor Penetration System C-AJ-1380
Not to Scale

Note: According to Underwriter's Laboratories, The F and T Ratings of a firestop system are not jeopardized if the metallic pipe penetrant passes through the opening at an angle not to exceed 45 degrees from the perpendicular and the annular spaces are within the requirements that have been established in the individual firestop system. this is applicable to firestop systems incorporating fill materials (such as sealants, putty, or mortar and packing materials.

SYSTEM NO. W-L-1054

ANSI/UL1479 (ASTM E814)	CAN/ULC S115
F Rating - 1 & 2 Hr (See Item 1 and 3)	F Rating - 1 & 2 Hr (See Item 1 and 3)
T Rating - 0 Hr	FT Rating - 0 Hr
L Rating at Ambient - Less Than 1 CFM/sq ft	FH Rating - 1 & 2 Hr (See Item 1 and 3)
L Rating at 400 F - Less Than 1 CFM/sq ft	FTH Rating - 0 Hr
	L Rating at Ambient - Less Than 1 CFM/sq ft
	L Rating at 400 F - Less Than 1 CFM/sq ft

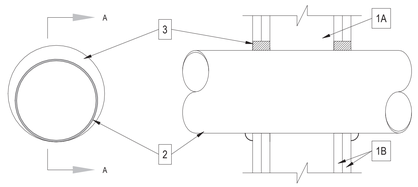

SECTION A-A

1. Wall Assembly — The 1 or 2 hr fire-rated gypsum wallboard/stud wall assembly shall be constructed of the materials and in the manner specified
in the individual U300 or U400 Series Wall and Partition Designs in the UL Fire Resistance Directory and shall include the following construction
features:
A. Studs — Wall framing may consist of either wood studs or steel channel studs. Wood studs to consist of nom 2 by 4 in. (51 by 102 mm) lumber spaced 16 in. (406 mm) OC. Steel studs to be min 2-1/2 in. (64 mm) wide and spaced max 24 in. (610 mm) OC. When steel studs are used and the diam of opening exceeds the width of stud cavity, the opening shall be framed on all sides using lengths of steel stud installed between the vertical studs and screw-attached to the steel studs at each end. The framed opening in the wall shall be 4 to 6 in. (102 to 152 mm) wider and 4 to 6 in. (102 to 152 mm) higher than the diam of the penetrating item such that, when the penetrating item is installed in the opening, a 2 to 3 in. (51 to 76 mm) clearance is present between the penetrating item and the framing on all four sides.
B. Gypsum Board* — 5/8 in. (16 mm) thick, 4 ft (122 cm) wide with square or tapered edges. The gypsum board type, thickness, number of layers, fastener type and sheet orientation shall be as specified in the individual U300 or U400 Series Design in the UL Fire Resistance Directory. Max diam of opening is 32-1/4 in. (819 mm) for steel stud walls. Max diam of opening is 14-1/2 in. (368 mm) for wood stud walls. The F and FH Ratings of the firestop system are equal to the fire rating of the wall assembly.
2. Through-Penetrants — One metallic pipe, conduit or tubing to be installed either concentrically or eccentrically within the firestop system. The
annular space shall be min 0 in. to max 2-1/4 in. (57 mm). Pipe may be installed with continuous point contact. Pipe, conduit or tubing to be rigidly
supported on both sides of wall assembly. The following types and sizes of metallic pipes, conduits or tubing may be used:
A. Steel Pipe — Nom 30 in. (762 mm) diam (or smaller) Schedule 10 (or heavier) steel pipe.
B. Iron Pipe — Nom 30 in. (762 mm) diam (or smaller) cast or ductile iron pipe.
C. Conduit — Nom 4 in. (102 mm) diam (or smaller) steel electrical metallic tubing or 6 in. (152 mm) . diam steel conduit.
D. Copper Tubing — Nom 6 in. (152 mm) diam (or smaller) Type L (or heavier) copper tubing.
E. Copper Pipe — Nom 6 in. (152 mm) diam (or smaller) regular (or heavier) copper pipe.
3. Fill, Void or Cavity Material* — Sealant — Min 5/8 in. (16 mm) thickness of fill material applied within the annulus, flush with both surfaces of wall.
At the point or continuous contact locations between pipe and wall, a min 1/2 in. (13 mm) diam bead of fill material shall be applied at the pipe wall
interface on both surfaces of wall.
HILTI CONSTRUCTION CHEMICALS, DIV OF HILTI INC — FS-One Sealant or FS-ONE MAX Intumescent Sealant
* Indicates such products shall bear the UL or cUL Certification Mark for jurisdictions employing the UL or cUL Certification (such as Canada),
respectively.

3 Wall Penetration Fire WL1054
Not to Scale

Note: According to Underwriter's Laboratories, The F and T Ratings of a firestop system are not jeopardized if the metallic pipe penetrant passes through the opening at an angle not to exceed 45 degrees from the perpendicular and the annular spaces are within the requirements that have been established in the individual firestop system. this is applicable to firestop systems incorporating fill materials (such as sealants, putty, or mortar and packing materials.

SYSTEM NO. C-AJ-8081

ANSI/UL1479 (ASTM E814)	CAN/ULC S115
F Rating - 2 Hr	F Rating - 2 Hr
T Rating - 2 Hr	FT Rating - 0 Hr
	FH Rating - 2 Hr
	FTH Rating - 0 Hr

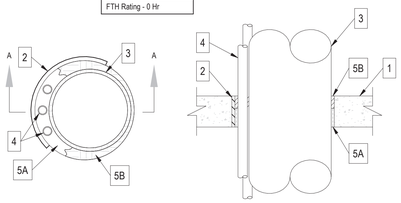

SECTION A-A

1. Floor or wall assembly - min 2-1/2" (64mm) thick reinforced lightweight or normal weight (100-150 pcf or 1600-2400 kg/m3) concrete floor or minimum 3-1/2" (89mm) reinforced lightweight or normal weight concrete wall. Wall may also be constructed of any UL classified concrete blocks*.
Maximum diameter of opening equals 8" (203mm).
See concrete blocks (CAZT) category in the fire resistance directory for names of manufacturers.
2. Metallic sleeve - (optional) nom 8" (203mm) diam (or smaller) schedule 40 (or heavier) steel sleeve cast or grouted into floor or wall assembly, flush with floor or wall surfaces or extending a max of 3" (76mm) above floor or beyond both surfaces of wall.
2a. Sheet metal sleeve - (optional, not shown) - max 6" (152mm) diam, min 26 ga galv steel provided with a no. 26 ga galv steel square flange spot welded to the sleeve at approx mid height, or flush with bottom of sleeve in floors, and sized to be a min of 2" (51mm) larger than the sleeve diam. The sleeve is to be cast in place and may extend a max of 4" (102mm) below the bottom of the floor and a max of 1" (25mm) above the top surface of the concrete floor.
2b. Sheet metal sleeve - (optional, not shown) - max 8" (203mm) diam, min 24 ga galv steel provided with a no. 24 ga galv steel square flange spot welded to the sleeve at approx mid height, or flush with bottom of sleeve in floors, and sized to be a min of 2" (51mm) larger than the sleeve diam. The sleeve is to be cast in place and may extend a max of 4" (102mm) below the bottom of the floor and a max of 1" (25mm) above the top surface of the concrete floor.
3. Steel tube - nom 6" (152mm) diam or smaller no. 16 ga steel tube installed eccentrically within the opening.
The annular space between the tube and the periphery of the opening shall be min 1/4" (6mm) to max 1-3/4" (45mm). Tube to be rigidly supported on both sides of floor or wall assembly.
4. Cables - max four 3/8" (10mm) diam two pair no. 22 awg foil shielded plenum rated cables with polyvinyl chloride (PVC) insulation and jacket. Min separation between cables and periphery of opening shall be 1/4" (6mm). Separation between cables and tube shall be min 0" (point of contact) to max 1" (25mm). Cables to be rigidly supported on both sides of floor or wall assembly.
5. Firestop system - the firestop system shall consist of the following:
a.Packing material - min 1-1/2" (38mm) thickness of min 4 pcf (64 kg/m3) mineral wool batt insulation, firmly packed into opening as a permanent form. Packing material to be recessed from top surface of floor or from both surfaces of wall as required to accommodate the required thickness of fill material.
b.Fill void or cavity material* - sealant - min 1" (25mm) thickness of fill material applied within annulus, flush with top surface of floor or both surfaces of wall.
Hilti Construction Chemicals, div of Hilti Inc - FS-ONE Sealant or FS-ONE MAX Intumescent Sealant.

* indicates such products shall bear the UL or cUL certification mark for jurisdictions employing the UL or cUL certification (such as Canada), respectively.

2 Floor Penetration System CAJ8081
Not to Scale

SYSTEM NO. W-L-8023

ANSI/UL1479 (ASTM E814)	CAN/ULC S115
F Rating - 1 & 2 Hr (See Item 1)	F Rating - 1 & 2 Hr (See Item 1)
T Rating - 0 Hr	FT Rating - 0 Hr
	FH Rating - 1 & 2 Hr (See Item 1)
	FTH Rating - 0 Hr

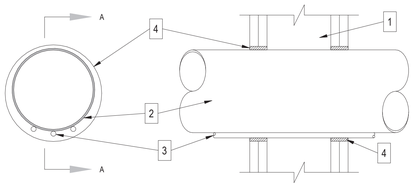

SECTION A-A

1. Wall assembly - The 1 or 2 hour fire-rated board/stud wall assembly shall be constructed of the materials and in the manner specified in the individual U300 or W400 series wall and partition designs in the UL fire resistance directory and shall include the following construction features:
   A. Studs - wall framing may consist of either wood studs or steel channel studs. Woods studs to consist of nom 2" by 4" (51 by 102mm lumber spaced 16" (406mm) oc. Steel studs to be min 2-1/2" (64mm) wide and spaced max 24" (610mm) oc.
   B. Gypsum board* - one or two layers of 5/8" (16mm) thick gypsum board as specified in the individual wall and partition design. Max diam of opening is 7" (178mm).
2. Steel tube, nominal 6" (152mm) dia (or smaller) 16 gauge steel tube installed eccentrically within the opening. The tube may be installed at an angle not greater than 45 degrees from perpendicular. The annular space between the tube and the periphery of the opening shall be min 1/4" (6mm) to max 3/4" (19mm). Tube to be rigidly supported on both sides of wall assembly.

3. Cables - max three 3/8" (10mm) diam two pair no. 22 awg foil shielded plenum rated cables with polyvinly chloride (PVC) insulation and jacket. The cables may be installed at an angle not greater than 45 degrees from perpendicular in line with steel tube (item 2). Min seperation between cables and periphery of opening shall be 1/4" (6mm). Seperation between cables and tube shall be min 0" (point of contact) to max 1" (25mm). Cables to be rigidly supported on both sides of floor or wall assembly.
4. Fill void or cavity material* - sealant - min 5/8" (16mm) thickness of fill material applied within annulus for 1 hr rated walls. Min 1-1/4" (32mm) thickness of fill material applied within annulus for 2 hr rated walls. Fill material applied flush with both surfaces of wall.

Hilti Construction Chemicals, div of Hilti Inc - FS-ONE Sealant or FS-ONE MAX Intumescent Sealant.

* Indicates such products shall bear the UL or cUL certification mark for jurisdictinos employing the UL or cUL certification (such as Canada), respectively.

1 Wall Penetration Fire WL8023
Not to Scale

EXCEPTIONS TO 0 T RATING

"THROUGH PENETRATION FIRESTOP SYSTEM"
PENETRATIONS THROUGH FIRE RATED FLOORS AND WALLS SHALL BE PROTECTED IN ACCORDANCE WITH **CBC 2019 SECTION 714**. SYSTEMS SHALL BE INSTALLED IN ACCORDANCE WITH MANUFACTURERS INSTALLATION INSTRUCTIONS AND APPROVED LISTING. MANUFACTURERS INSTALLATION INSTRUCTIONS AND APPROVED LISTING SHALL BE PROVIDED FOR REVIEW BY INSPECTION AUTHORITIES. SUBSTITUTIONS OF REVISIONS OR ADDITIONS TO APPROVED UL SYSTEMS SHALL BE SUBMITTED TO THE INSPECTOR OF RECORD AND THE OSHPD FIRE MARSHALL FOR FIELD REVIEW AND APPROVAL.

714.5.1 THROUGH PENETRATIONS. THROUGH PENETRATIONS OF HORIZONTAL ASSEMBLIES SHALL COMPLY WITH SECTION **714.5.1.1** OR **714.5.1.2**.

EXCEPTION: 2 PENETRATIONS IN A SINGLE CONCRETE FLOOR BY STEEL, FERRIS OR COPPER CONDUITS, PIPES, TUBES OR VENTS WITH A MAXIMUM 6-INCH (152 MM) NOMINAL DIAMETER, PROVIDED THE CONCRETE, GROUT OR MORTAR IS INSTALLED THE FULL THICKNESS OF THE FLOOR OR THE THICKNESS REQUIRED TO MAINTAIN THE FIRE RESISTANCE RATING. THE PENETRATING ITEMS SHALL NOT BE LIMITED TO THE PENETRATION OF A SINGLE CONCRETE FLOOR, PROVIDED THE AREA OF THE OPENING THROUGH EACH FLOOR DOES NOT EXCEED 144 SQUARE INCHES (92 900 MM²).

714.5.1.1 FIRE-RESISTANCE-RATED ASSEMBLIES. THROUGH PENETRATIONS SHALL BE PROTECTED USING SYSTEMS INSTALLED AS TESTED IN THE APPROVED FIRE RESISTANCE RATED ASSEMBLY.

714.5.1.2 THROUGH-PENETRATION FIRESTOP SYSTEM. THROUGH PENETRATIONS SHALL BE PROTECTED BY AN APPROVED THROUGH-PENETRATION FIRE STOP SYSTEM INSTALLED AND TESTED IN ACCORDANCE WITH ASTM E814 OR UL1479, WITH A MINIMUM POSITIVE PRESSURE DIFFERENTIAL OF 0.01 INCH OF WATER (2.49 Pa). THE SYSTEM SHALL HAVE AN F RATING/T RATING OF NOT LESS THAN ONE HOUR BUT NOT LESS THAN THE REQUIRED RATING OF THE FLOOR PENETRATED.

EXCEPTION:
1. FLOOR PENETRATIONS CONTAINED IN LOCATED WITHIN THE CAVITY OF A WALL ABOVE THE FLOOR OR BELOW THE FLOOR DO NOT REQUIRE A T RATING.

VENTURA COUNTY HEALTH CARE AGENCY

PUBLIC VENTURA COUNTY WORKS

ENGINEERING SERVICES

RASMUSSEN & ASSOCIATES
Architecture
Planning
Interiors
21 S. California Street
Fourth Floor
Ventura, California 93001
(805) 648-1234

PROFESSIONAL SEALS

PERMIT APPROVAL STAMP

REVIEWED IN ACCORDANCE WITH THE REQUIREMENTS OF T24, CCR
APPROVED
Department of Health Care Access and Information
FACILITIES DEVELOPMENT DIVISION
9/28/2022, 3:17:57 PM
H202495-56-00
Laura Baldrati

PERMIT NO HCAI #H202495-56-00

NO	REVISION	DATE
△		

PUBLIC WORKS PROJECT MANAGER

CONSULTANT PROJECT MANAGER Jay Lomagno

DRAWN BY	CHECKED BY
R&A	JJL
CONSULTANT JOB NO A000495	DATE 06/15/2022

PROJECT TITLE AND ADDRESS

VENTURA COUNTY MEDICAL CENTER PEDIATRIC UNIT

300 HILLMONT AVE
VENTURA, CA 93003

COUNTY SPEC NUMBER CP21-04

COUNTY PROJECT NUMBER P6T20009

COUNTY DWG NO — SHEET 87 OF 89

SHEET TITLE

FIRESTOP DETAILS

SHEET NO PT- 500

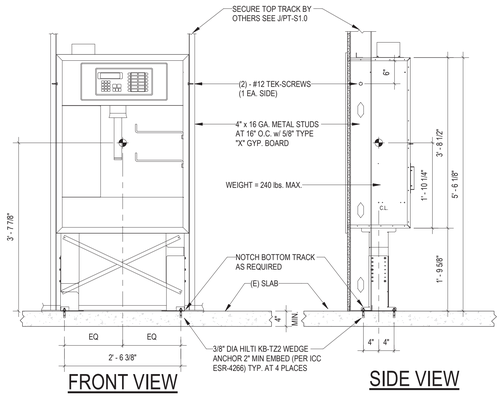

NOTE: STATION FOOT SECURES TRACK WITHOUT ADDED ANCHORS REQUIRED

A1 NEXUS/RECESSED STATION ANCHORAGE DETAIL

GENERAL NOTES

PNEUMATIC TUBE ANCHORAGE GENERAL NOTES:

1. THE CONTRACTOR SHALL VERIFY DIMENSIONS, CONDITIONS AND ELEVATIONS BEFORE STARTING WORK. THE ARCHITECT SHALL BE NOTIFIED IMMEDIATELY IF ANY DISCREPANCIES ARE FOUND.
2. UNLESS SPECIFICALLY DETAILED ELSEWHERE. WHERE NO DETAIL IS SHOWN, CONSTRUCTION SHALL BE AS SHOWN FOR OTHER SIMILAR WORK, AND AS REQUIRED BY THE BUILDING CODE.
3. GOVERNING CODE: THE CALIFORNIA BUILDING CODE, 2019 EDITION, TITLE 24, PART 2. A COPY OF TITLE 24 PARTS 1, 2, 3, 4 AND 5 SHALL BE KEPT ON SITE.
4. REFER TO MECHANICAL AND ELECTRICAL DRAWINGS FOR LOCATION OF OPENINGS OR SUPPORTS FOR THEIR RESPECTIVE ITEMS. NOTIFY ARCHITECT, PRIOR TO CONSTRUCTION OF ANY INTERFERENCE OR INCOMPATIBILITY.
5. EARTHQUAKE DESIGN DATA:
   RISK CATEGORY IV: I_e = 1.5
   SITE CLASS = D - DEFAULT;
   SEISMIC DESIGN CATEGORY = D
   a_p & R_p = AS PER TABLE 13.6-1 OF ASCE/SEI 7-16
   MAPPED SPECTRAL ACCELERATIONS: S_s = 1.993g
   DESIGN SPECTRAL RESPONSE COEFFICIENTS: S_{DS} = 1.594g

ERECTION NOTES:

1. THE CONTRACTOR SHALL BE RESPONSIBLE FOR COMPLIANCE WITH CALIFORNIA CONSTRUCTION SAFETY ORDERS.
2. APPROVAL OF SHOP DRAWINGS BY THE STRUCTURAL ENGINEER OF RECORD SHALL NOT BE CONSTRUED AS ACCEPTING THIS RESPONSIBILITY.
3. ALL STRUCTURAL FRAMING MEMBERS SHALL BE ADEQUATELY SHORED AND BRACED DURING ERECTION AND UNTIL FULL VERTICAL AND LATERAL SUPPORT IS PROVIDED BY ADJOINING MEMBERS.

EQUIPMENT ACHORAGE NOTES:

1. SUPPORTS AND ATTACHMENTS OF ALL EQUIPMENT TO BE INSTALLED AS A PART OF THIS PROJECT SHALL BE DETAILED ON CONSTRUCTION DOCUMENTS, EXCEPT THOSE EXEMPT BY THE 2019 CBC SECTION 1617A.1.18:
   A. FURNITURE (EXCEPT STORAGE CABINETS AS NOTED IN ASCE 7-16 TABLE 13.5-1).
   B. TEMPORARY OR MOVEABLE (MOBILE) EQUIPMENT.
2. THE ENFORCEMENT AGENCY SHALL BE PERMITTED TO REQUIRE ATTACHMENTS FOR EQUIPMENT WITH HAZARDOUS CONTENTS TO BE SHOWN ON CONSTRUCTION DOCUMENTS IRRESPECTIVE OF WEIGHT.

MATERIALS:

1. STRUCTURAL STEEL:
   A. ALL SHOP WELDING SHALL BE DONE BY A QUALIFIED, AWS CERTIFIED WELDER IN THE SHOP OF AN APPROVED FABRICATOR.
   B. ALL SHOP AND FIELD WELDING SHALL HAVE CONTINUOUS INSPECTION BY AN AWS CERTIFIED WELDING INSPECTOR.
   C. MATERIAL SPECIFICATIONS:
      a. BARS, PLATES, ANGLES, AND MISC. STEEL: ASTM A36 (UNO.)
      b. BOLTS: ASTM A307 (UNO.)
      c. WELDING ELECTRODES - E70XX.
   D. LIGHT GA. STEEL - AS PER SSMA ICC-ESR-3064P . ALL WELDING TO BE PERFORMED BY CERTIFIED LIGHT GAUGE WELDERS FOR ALL APPROPRIATE DIRECTION COMPLYING WITH AWS D1.3 WELDING RODS TO CONFORM TO THE FOLLOWING:
      a. 43 MIL AND LIGHTER ---------- E60xx
      b. 54 MIL AND HEAVIER ---------- E70xx
      c. LIGHT GAUGE TO STRUCTURAL STEEL -- E70xx LOW HYDROGEN
2. CONCRETE (VERIFIED BY SEOR):
   A. STRUCTURAL FLOORS ARE 10" MIN. LIGHT WEIGHT CONCRETE SLABS (SEOR TO VERIFY).
   B. SLAB ON GRADE IS MINIMUM 4" THICK (3,000 PSI MIN.) UNO.

POST-INSTALLED ANCHOR NOTES:

1. ANCHORS SHALL BE PER CBC 1617A.1.19 & TESTED PER CBC 1910A.5.
2. WHEN INSTALLING DRILLED-IN ANCHORS AND/OR POWDER DRIVEN PINS IN EXISTING NON-PRESTRESSED REINFORCED CONCRETE, USE CARE AND CAUTION TO AVOID CUTTING OR DAMAGING THE THE EXISTING REINFORCING BARS. MAINTAIN A MINIMUM CLEARANCE OF ONE INCH BETWEEN THE REINFORCEMENT AND THE DRILLED-IN ANCHOR AND/OR PIN.
3. WHEN POST-INSTALLED ANCHORS ARE USED FOR NONSTRUCTURAL APPLICATIONS SUCH AS EQUIPMENT ANCHORAGE, 50 PERCENT OR ALTERNATE BOLTS IN A GROUP, INCLUDING AT LEASE ONE-HALF THE ANCHORS IN EACH GROUP, SHALL BE TESTED. IF THERE ARE ANY FAILURES, ALL ANCHORS OF THE SAME TYPE SHALL BE TESTED, WHICH ARE INSTALLED BY THE SAME TRADE, NOT PREVIOUSLY TESTED UNTIL TWENTY (20) CONSECUTIVE ANCHORS PASS, THEN RESUME THE INITIAL TEST FREQUENCY.
4. THE FOLLOWING CRITERIA APPLY FOR THE ACCEPTANCE OF INSTALLED ANCHORS:
   A. HYDRAULIC RAM METHOD: THE ANCHOR SHOULD HAVE NO OBSERVABLE MOVEMENT AT THE APPLICABLE TEST LOAD. FOR WEDGE AND SLEEVE TYPE ANCHORS, A PRACTICAL WAY TO DETERMINE OBSERVABLE MOVEMENT IS THAT THE WASHER UNDER THE NUT BECOMES LOOSE.
   B. TORQUE WRENCH METHOD: THE APPLICABLE TEST TORQUE MUST BE REACHED WITHIN THE FOLLOWING LIMITS: WEDGE OR SLEEVE TYPE: 1/2 TURN OF THE NUT (1/4 TURN OF THE NUT FOR 3/8" ANCHOR ONLY).
5. IF THE MANUFACTURER'S RECOMMENDED INSTALLATION TORQUE IS LESS THAN THE TEST TORQUE NOTED IN THE TABLE. THE MANUFACTURER'S RECOMMENDED INSTALLATION TORQUE SHALL BE USED IN LIEU OF THE TABULATED VALUES.
6. ALL TESTS SHALL BE PERFORMED IN THE PRESENCE OF THE INSPECTOR OF RECORD OR SPECIAL INSPECTOR.
7. WHEN INSTALLED IN THE LOWER FLUTE OF 3" COMPOSITE DECKS, ANCHORS SHALL NOT BE LOCATED MORE THAN 1" FROM THE CENTER LINE OF THE LOWER FLUTE.
8. TORQUE TEST VALUES OF ANCHORS IS SHOWN BELOW:

TEST LOADS HILTI "KB-TZ2" (CARBON STEEL) (ESR-4266):

BOLT DIAMETER	REQUIRED TORQUE (FT -LBS.)
3/8"	30
1/2"	50

STRUT NOTES:

1. TIGHTEN CHANNEL NUTS AND BOLTS MOUNTED TO UNISTRUT CHANNELS TO THE LISTED TORGUE VALUES BELOW:
   1/4" BOLT & P3006 CHANNEL NUT - 6 FT.-LBS.
   3/8" BOLT & P3008 CHANNEL NUT - 19 FT.-LBS.
   1/2" BOLT & P3010 CHANNEL NUT - 50 FT.-LBS.
   5/8" BOLT & P1012 CHANNEL NUT - 100 FT.-LBS.
   3/4" BOLT & P1023 CHANNEL NUT - 125 FT.-LBS.

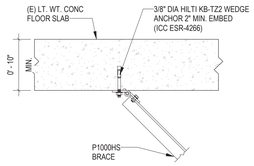

NOTE:
1. HORIZONTAL STRUT CAN BE INSTALLED AT ANY ANGLE IN RELATION BRACE ARM
2. FOR ANTERNATIVE UPPER BRACE CONNECTION ONTO (E) Wx STEEL BEAM, SEE DETAIL B/PT-S1.3

D DETAIL

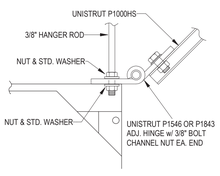

F DETAIL

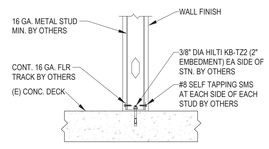

DETAIL FOR REFERENCE ONLY; REFER TO ARCHITECTURAL DRAWINGS FOR ADDITIONAL FRAMING INFORMATION.

H BASE TRACK

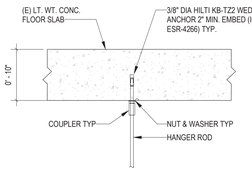

NOTE:
1. HORIZONTAL STRUT CAN BE INSTALLED AT ANY ANGLE IN RELATION TO DECK.
2. FOR ANTERNATIVE UPPER BRACE CONNECTION ONTO (E) Wx STEEL BEAM, SEE DETAIL A/PT-S1.3

E DETAIL

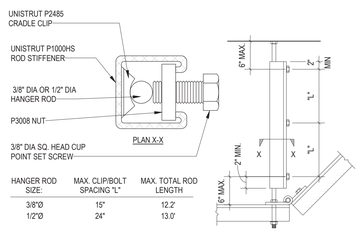

HANGER ROD SIZE:	MAX. CLIP/BOLT SPACING "L"	MAX. TOTAL ROD LENGTH
3/8"Ø	15"	12.2'
1/2"Ø	24"	13.0'

G ROD STIFFENER DETAIL

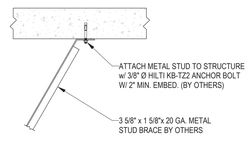

DETAIL FOR REFERENCE ONLY; REFER TO ARCHITECTURAL DRAWINGS FOR ADDITIONAL FRAMING INFORMATION.

J BRACE CONNECTION

**NEW PARTITION FRAMING IS LIMITED TO FURRING IN ENCLOSURE AROUND THE NEW P.T. STATION; STUDS TO BE 6" 6" MIN. IN HEIGHT AND KICK BRACED @ EACH CORNER. THE NEW PARTITIONS ARE NON-BEARING OTHER THAN THEIR OWN WEIGHT INCLUDING THE WALL FINISH MATERIAL.

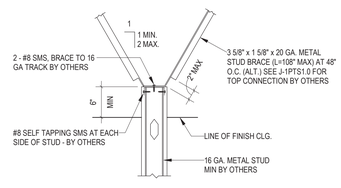

DETAIL FOR REFERENCE ONLY; REFER TO ARCHITECTURAL DRAWINGS FOR ADDITIONAL FRAMING INFORMATION.

K WALL BRACING

VENTURA COUNTY HEALTHCARE AGENCY

PUBLIC VENTURA COUNTY WORKS

ENGINEERING SERVICES

RASMUSSEN & ASSOCIATES
Architecture
Planning
Interiors
21 S. California Street
Fourth Floor
Ventura, California 93001
(805) 648 - 1234

PROFESSIONAL SEALS

PERMIT APPROVAL STAMP

REVIEWED IN ACCORDANCE WITH THE REQUIREMENTS OF T24, CCR
APPROVED
Department of Health Care Access and Information
FACILITIES DEVELOPMENT DIVISION
9/28/2022, 3:17:57 PM
H202495-56-00
Laura Baldrati

PERMIT NO OSHPD H202495-56-00

NO	REVISION	DATE
△		

PUBLIC WORKS PROJECT MANAGER

CONSULTANT PROJECT MANAGER: Jay Lomagno

DRAWN BY: JK | CHECKED BY: RS

CONSULTANT JOB NO: A200495 | DATE: 01/31/2022

PROJECT TITLE AND ADDRESS

VENTURA COUNTY MEDICAL CENTER PEDIATRIC UNIT

300 HILLMONT AVE
VENTURA, CA 93003

COUNTY SPEC NUMBER: CP21-04

COUNTY PROJECT NUMBER: P6T20009

COUNTY DWG NO | SHEET 88 OF 89

SHEET TITLE: SEISMIC DETAILS

SHEET NO: PT-S1.0

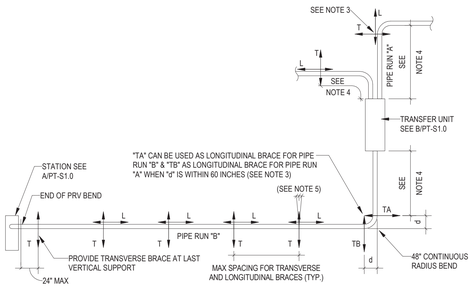

NOTE:
1) T - INDICATES TRANSVERSE BRACING @ 40'-0" O.C. MAX.
L - INDICATES LONGITUDINAL BRACING SINGLE TUBE RUN @ 40'-0" O.C. MAX.
**SEE PNEUMATIC TUBE BRACING REQUIREMENTS ON SHEET PT-S1.1
2) NO ADDITIONAL SEISMIC BRACES ARE REQUIRED ON SINGLE 6" P-TUBE OFFSETS LOCATED BETWEEN BRACED CONNECTIONS.
3) AT FULL RADIUS BENDS, "T" & "L" BRACING MAY BE INSTALLED AT ONE SIDE OF THE BEND IN LIEU OF PROVIDING (1) TRANSVERSE BRACE AT EACH SIDE OF THE BEND AS INDICATED ABOVE.
4) SUM OF INDIVIDUAL P. TUBE BRACING DISTANCE FROM TRANSFER UNIT SHALL NOT TO EXCEED 180 FT (e.g. FOR 1x6 TRANSFER UNIT, (1 TUBE IN & 6 TUBE OUT) 7 TUBES x 25 FT AVG. BRACE DISTANCE (40 FT MAX.) = 175 FT. (TOTAL)
5) ALL SEISMIC BRACING CAN BE ROTATED TO ± 5° MAXIMUM, TYPICAL AT PNEUMATIC TUBE SEISMIC BRACING.

A TYPICAL LOCATION OF LATERAL BRACING FOR P-TUBES

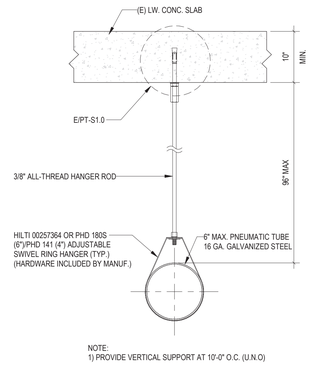

NOTE:
1) PROVIDE VERTICAL SUPPORT AT 10'-0" O.C. (U.N.O)

B DETAIL AT TYPICAL TUBE SUPPORT

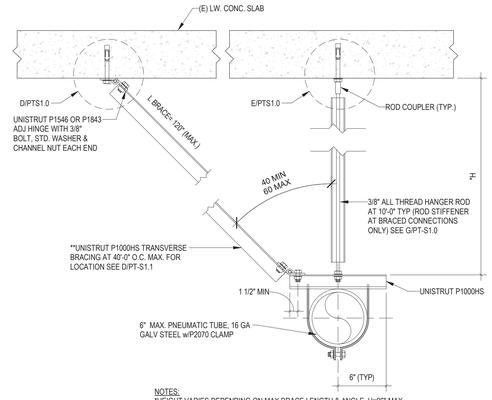

NOTES:
*HEIGHT VARIES DEPENDING ON MAX BRACE LENGTH & ANGLE. H=96" MAX.
**SEE PNEUMATIC TUBE BRACING REQUIREMENTS ON SHEET NO. PT-S1.1

C1 DETAIL AT TUBE TRANSVERSE BRACE

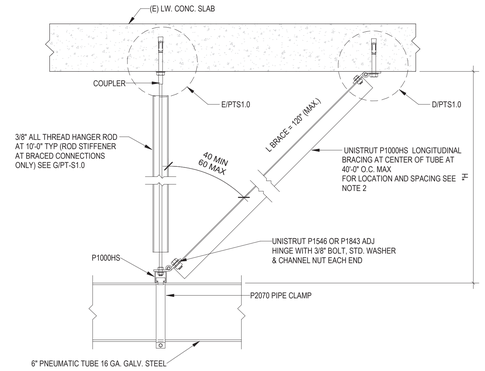

NOTES:
*HEIGHT VARIES DEPENDING ON MAX BRACE LENGTH & ANGLE. H=96" MAX.
**SEE PNEUMATIC TUBE BRACING REQUIREMENTS ON SHEET NO. PT-S1.1

C2 DETAIL AT TUBE LONGITUDINAL BRACE

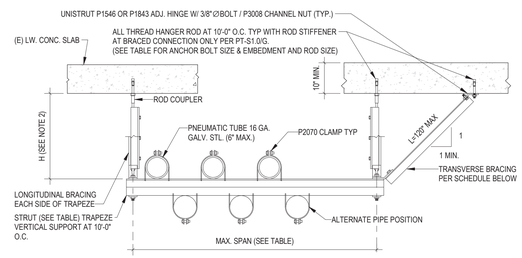

SECTION VIEW

NOTE:
1. SEISMIC BRACING CAN BE LOCATED AT ANY CORNER AND INSTALLED OPPOSING DIRECTION.
2. HEIGHT VARIES PER MAXIMUM BRACE LENGTH & ANGLE.
3. PNEUMATIC TUBES CAN BE INSTALLED ANYWHERE ON STRUT TRAPEZE.

NO. OF TUBES	STRUT	MAX. SPAN (FT)	THREADED HANGER ROD SIZE, (IN) DIA.	REQUIRED BRACE SPACING (FT) O.C.			HILTI KB-TZ2 ANCHOR BOLT (PER ICC ESR-4266)	
				TRANSVERSE		LONGITUDINAL	SIZE (IN) DIA.	EMBEDMENT (IN) MIN.
				ONE SIDE	TWO SIDES			
1	P1000	8	3/8	40	--	40	3/8	2
2	P1000	6	1/2	40	--	40	3/8	2
3	P1000	5	1/2	40	--	40	1/2	3 1/4
3	P1001	9.5	1/2	40	--	40	1/2	3 1/4
4	P1000	4	1/2	30	--	40	1/2	3 1/4
4	P1001	8.5	1/2	30	--	40	1/2	3 1/4
5	P1001	8	1/2	30	40	40	1/2	3 1/4
6	P1001	7.5	1/2	30	40	40	1/2	3 1/4

F TRAPEZE SUPPORT & LATERAL BRACES

VENTURA COUNTY HEALTHCARE AGENCY

PUBLIC WORKS VENTURA COUNTY

ENGINEERING SERVICES

RASMUSSEN & ASSOCIATES
Architecture
Planning
Interiors
21 S. California Street
Fourth Floor
Ventura, California 93001
(805) 648-1234

PROFESSIONAL SEALS

PERMIT APPROVAL STAMP

REVIEWED IN ACCORDANCE WITH THE REQUIREMENTS OF T24, CCR
APPROVED
Department of Health Care Access and Information
FACILITIES DEVELOPMENT DIVISION
9/28/2022, 3:17:57 PM
H202495-56-00
Laura Baldrati

PERMIT NO OSHPD H202495-56-00

NO	REVISION	DATE
△		

PUBLIC WORKS PROJECT MANAGER

CONSULTANT PROJECT MANAGER
Jay Lomagno

DRAWN BY	CHECKED BY
JK	RS
CONSULTANT JOB NO A000495	DATE 01/31/2022

PROJECT TITLE AND ADDRESS

VENTURA COUNTY MEDICAL CENTER PEDIATRIC UNIT

300 HILLMONT AVE
VENTURA, CA 93003

COUNTY SPEC NUMBER
CP21-04

COUNTY PROJECT NUMBER
P6T20009

COUNTY DWG NO | SHEET 89 OF 89

SHEET TITLE
SEISMIC DETAILS

SHEET NO
PT-S1.1